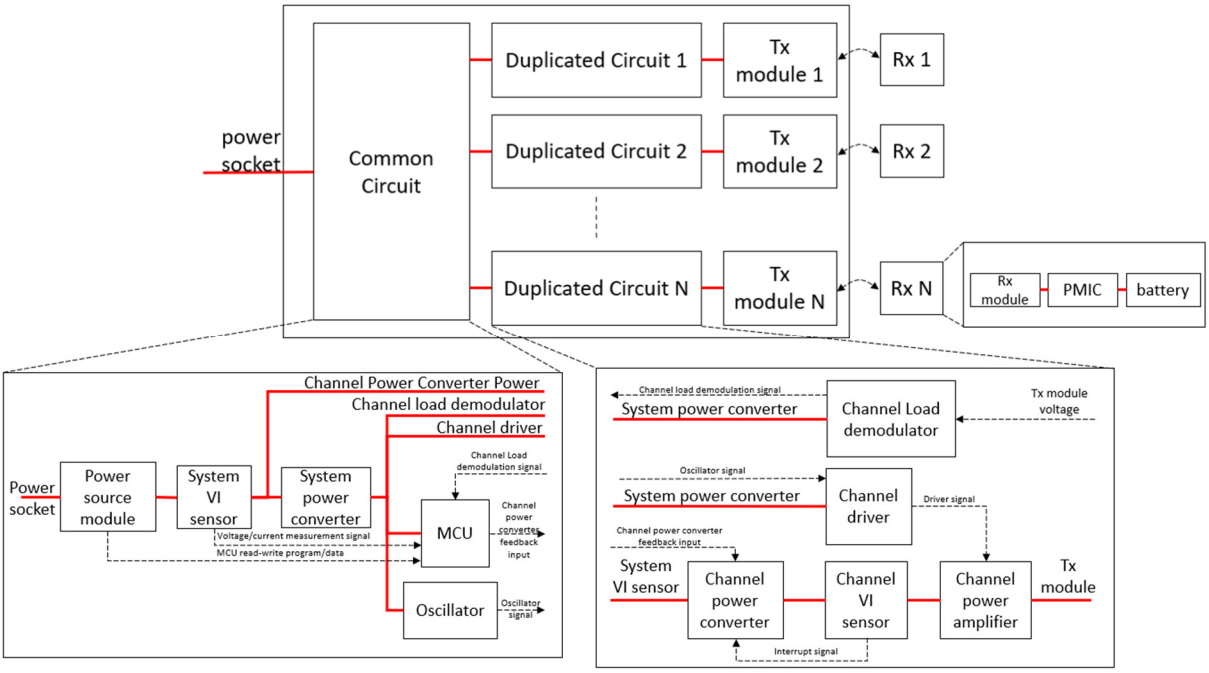
power socket
Common Circuit
Duplicated Circuit 1
Duplicated Circuit 2
Duplicated Circuit N
Tx module 1
Tx module 2
Tx module N
Rx 1
Rx 2
Rx N
Rx module
PMIC
battery
Channel Power Converter Power
Channel load demodulator
Channel driver
Power socket
Power source module
System VI sensor
System power converter
Channel Load demodulation signal
MCU
Channel power converter feedback input
Voltage/current measurement signal
MCU read-write program/data
Oscillator
Oscillator signal
Channel load demodulation signal
System power converter
Channel Load demodulator
Tx module voltage
Oscillator signal
System power converter
Channel driver
Driver signal
Channel power converter feedback input
System VI sensor
Channel power converter
Channel VI sensor
Channel power amplifier
Tx module
Interrupt signal

Fig. 1

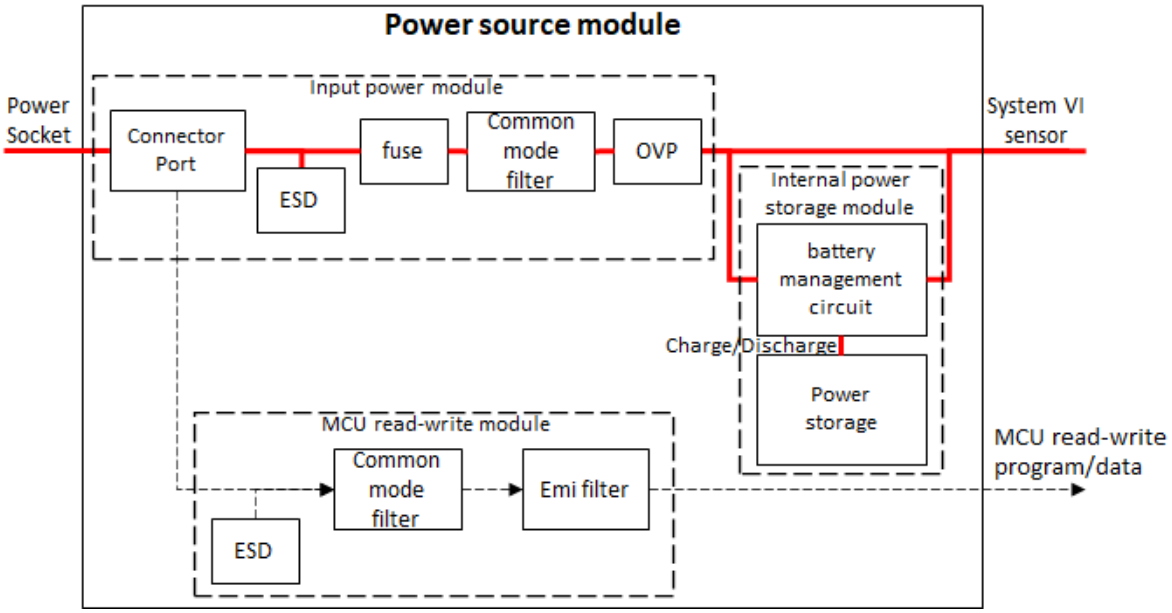
Power source module
Power Socket
Input power module
Connector Port
ESD
fuse
Common mode filter
OVP
System VI sensor
Internal power storage module
battery management circuit
Charge/Discharge
Power storage
MCU read-write module
Common mode filter
Emi filter
ESD
MCU read-write program/data

Fig. 2

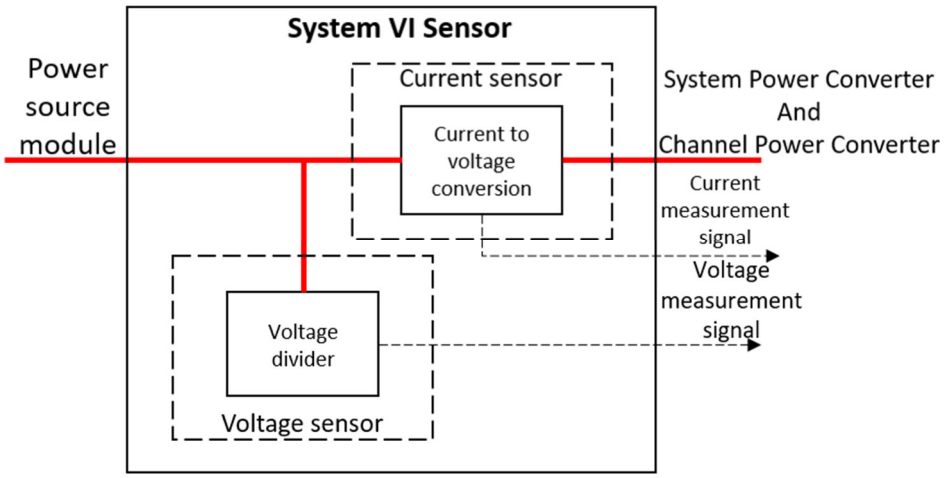

Fig. 3

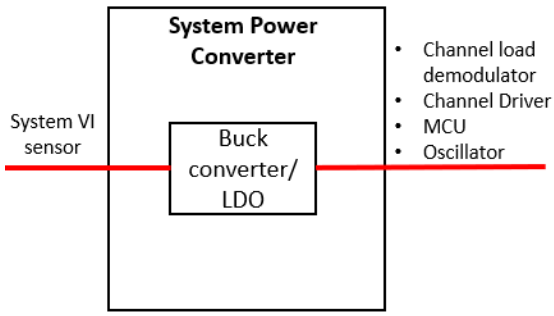

Fig. 4a

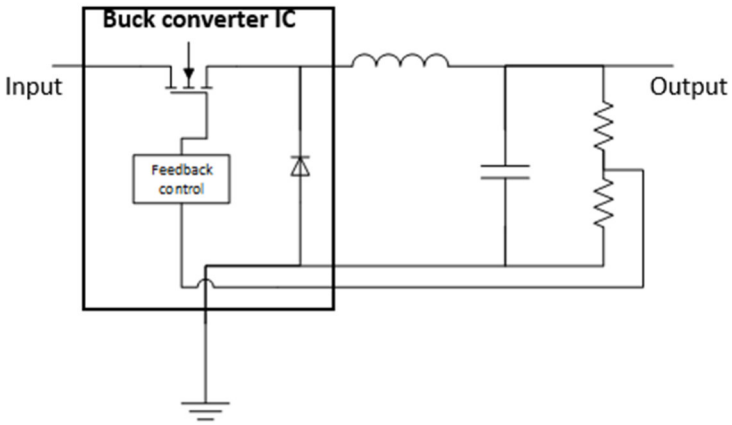

Fig. 4b

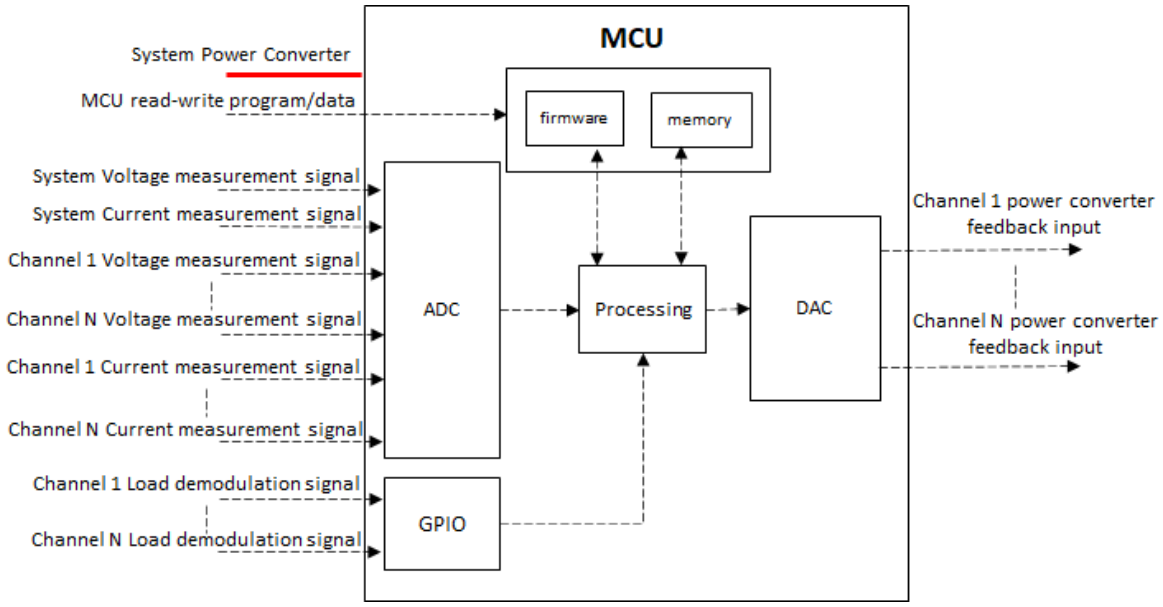

Fig. 5

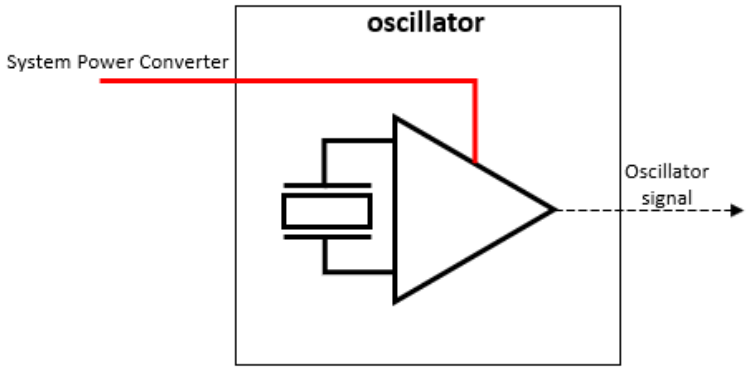

Fig. 6

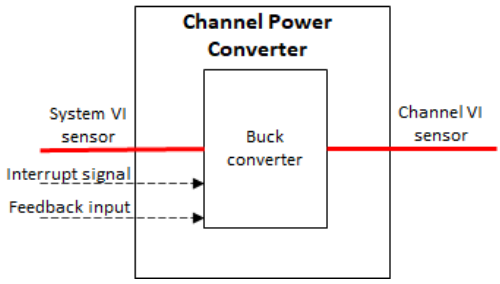

Fig. 7a

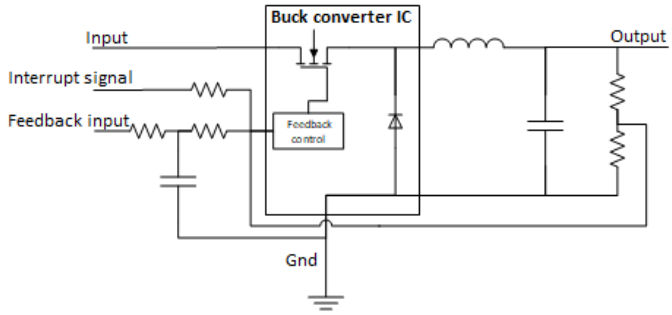

Fig. 7b

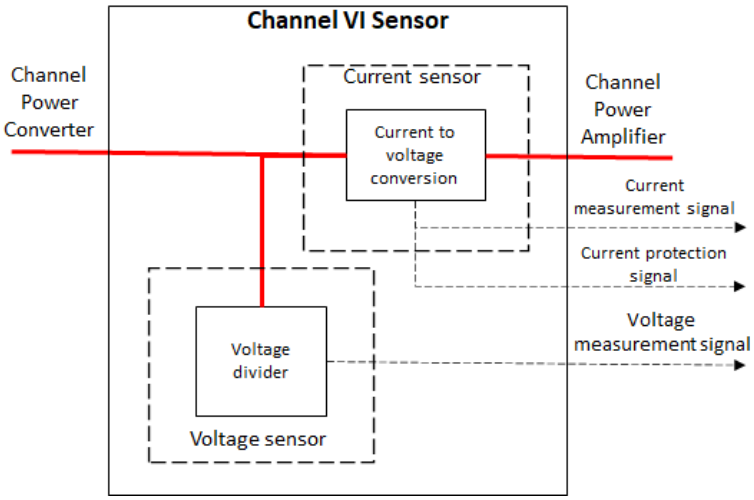

Fig. 8

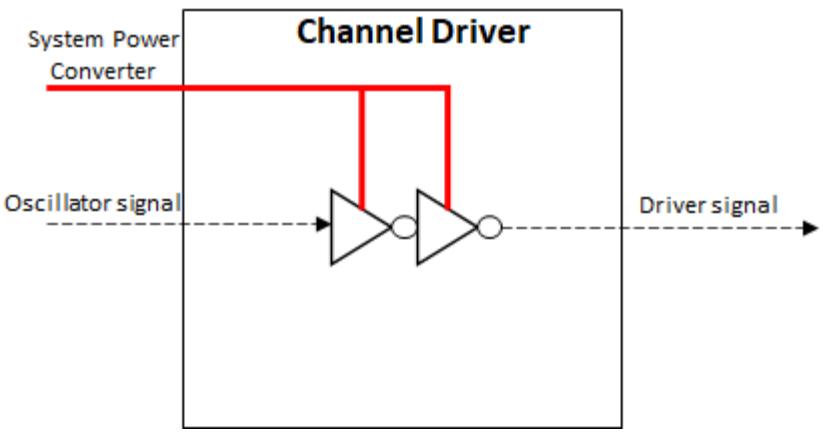

Fig. 9

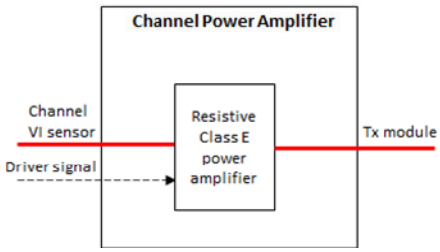

Fig. 10a

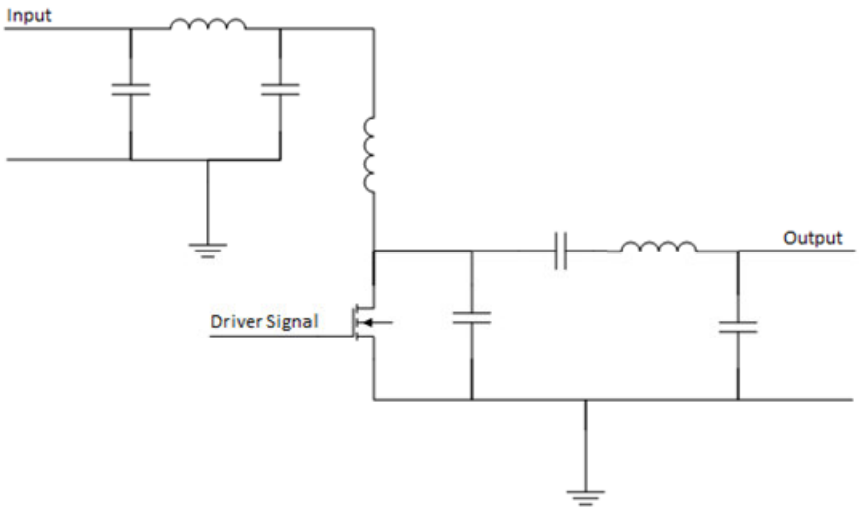

Fig. 10b

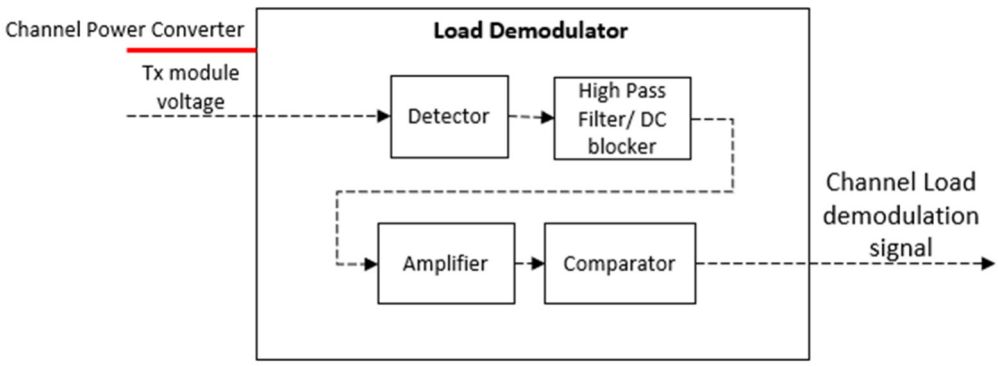

Fig. 11

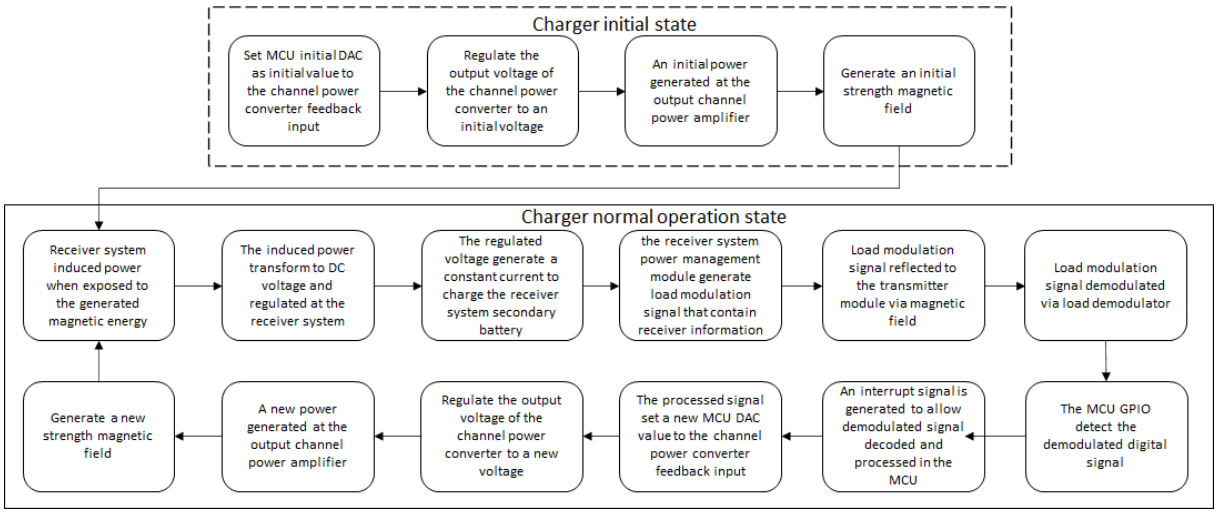

Fig. 12



Fig. 13a

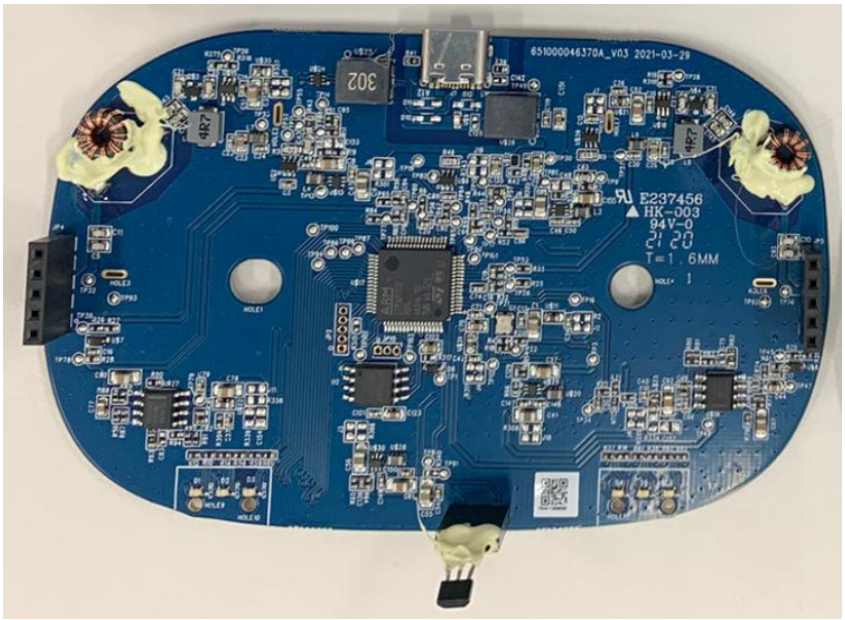

Fig. 13b

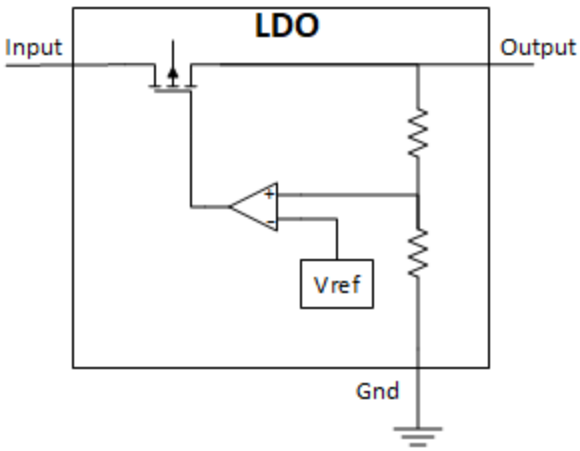

Fig. 14

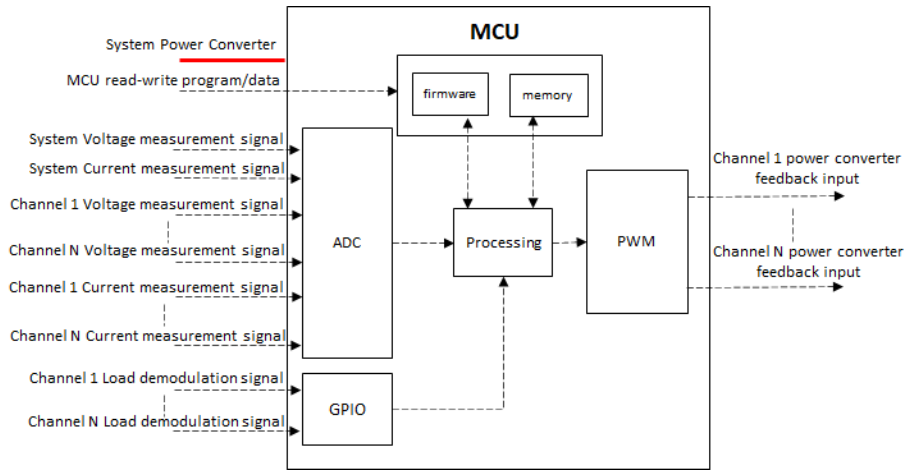

Fig. 15

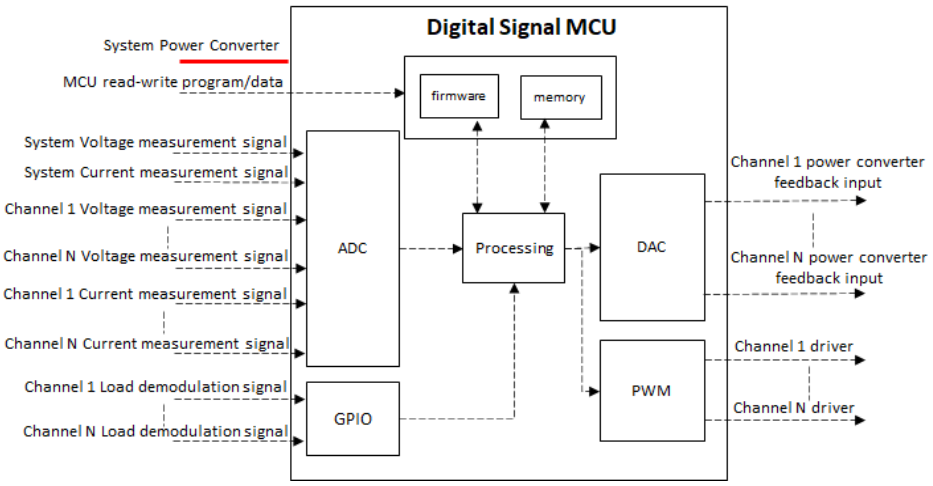

Fig. 16

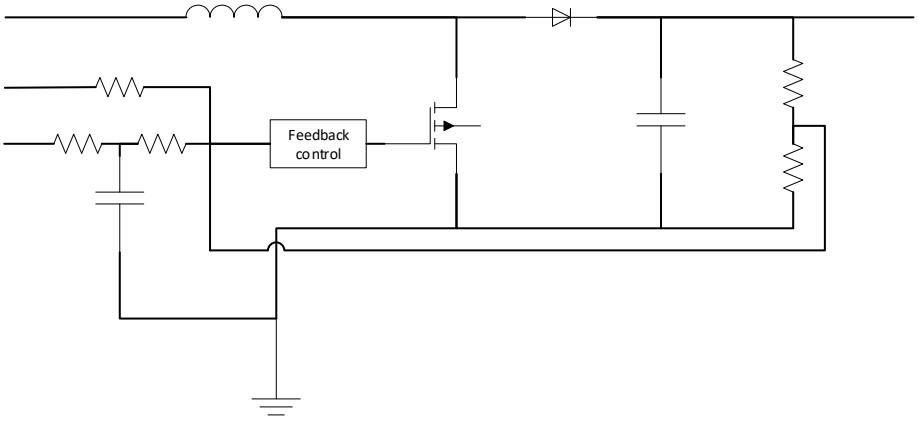

Fig. 17a

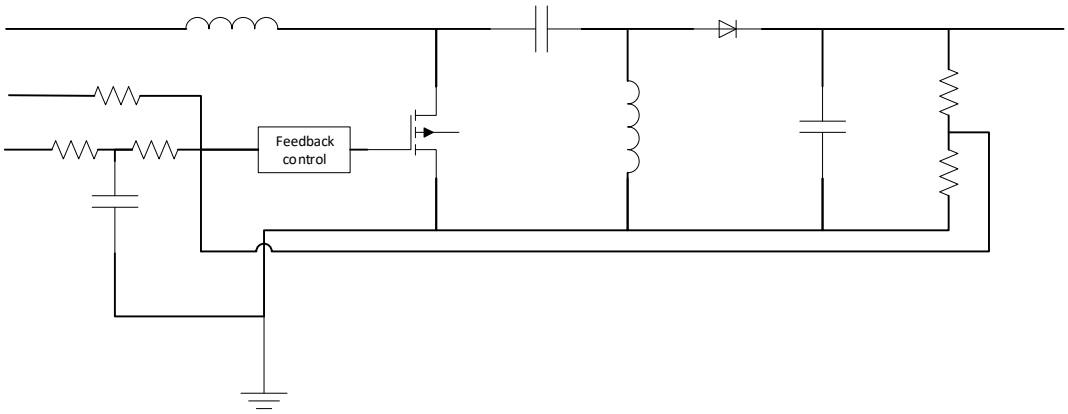

Fig. 17b

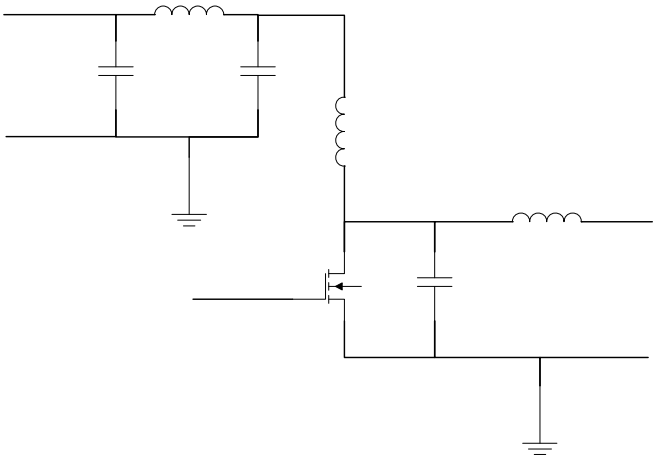

Fig. 18



Fig. 19

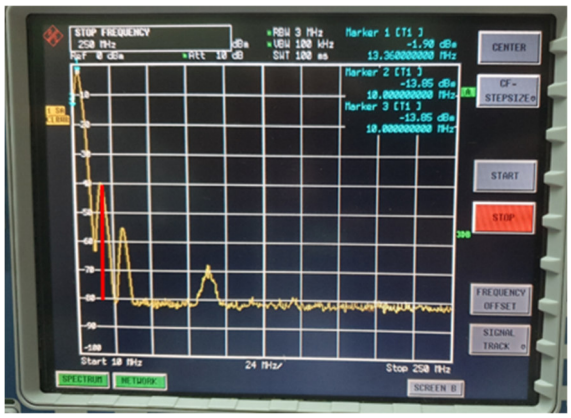

Fig. 20a

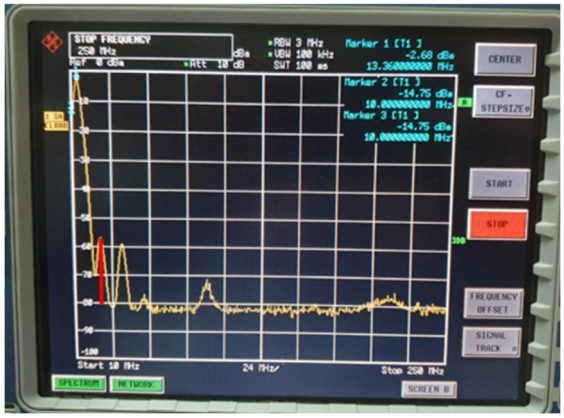

Fig. 20b

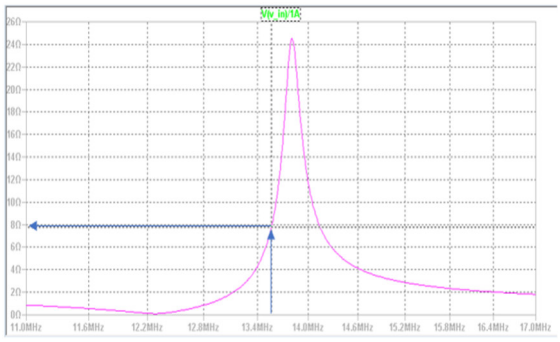

Fig. 21a

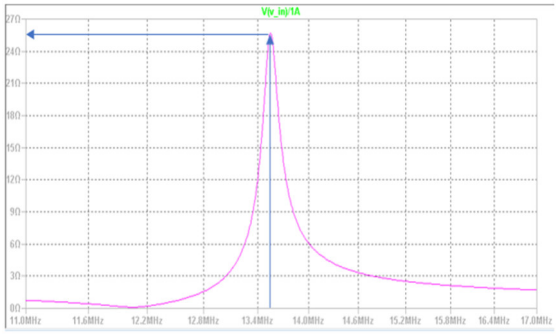

Fig. 21b

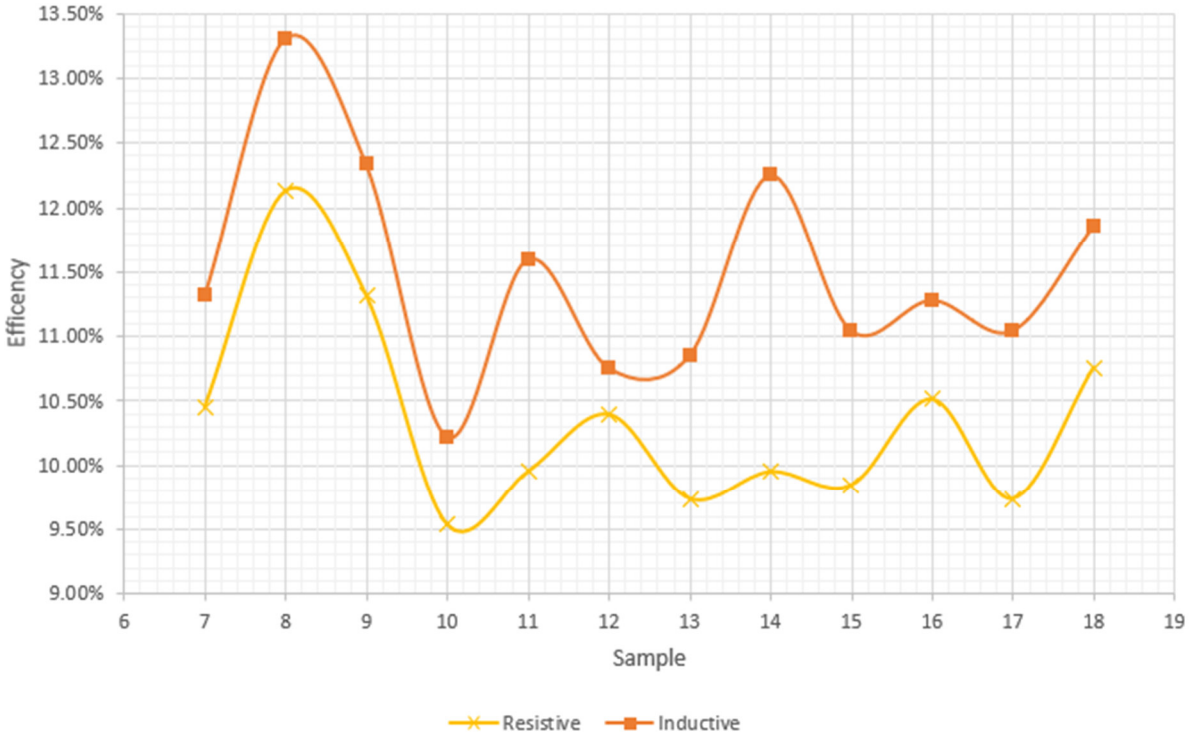

Fig. 22

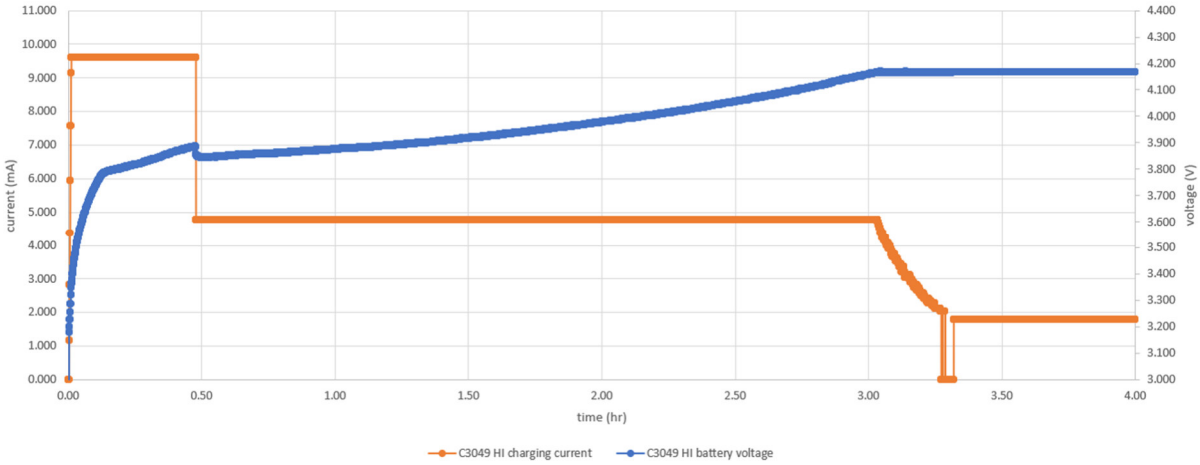
current (mA)
voltage (V)
time (hr)
C3049 HI charging current
C3049 HI battery voltage

Fig. 23

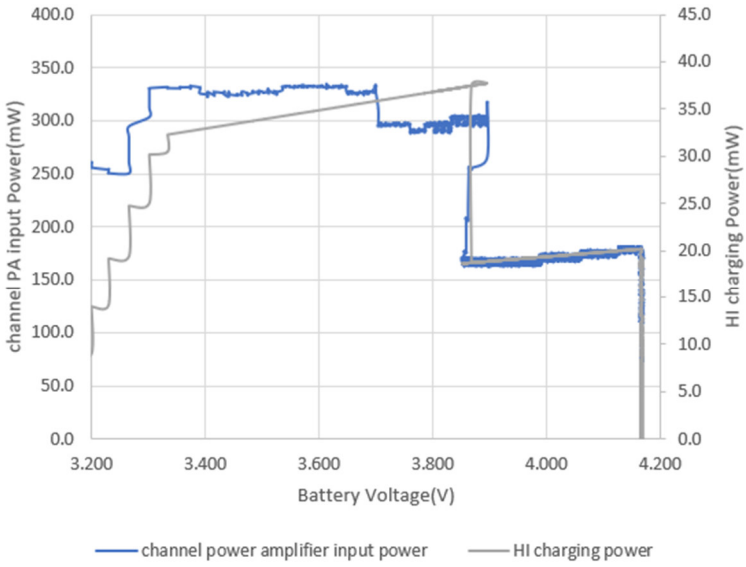
channel PA input Power(mW)
HI charging Power(mW)
Battery Voltage(V)
channel power amplifier input power
HI charging power

Fig. 24

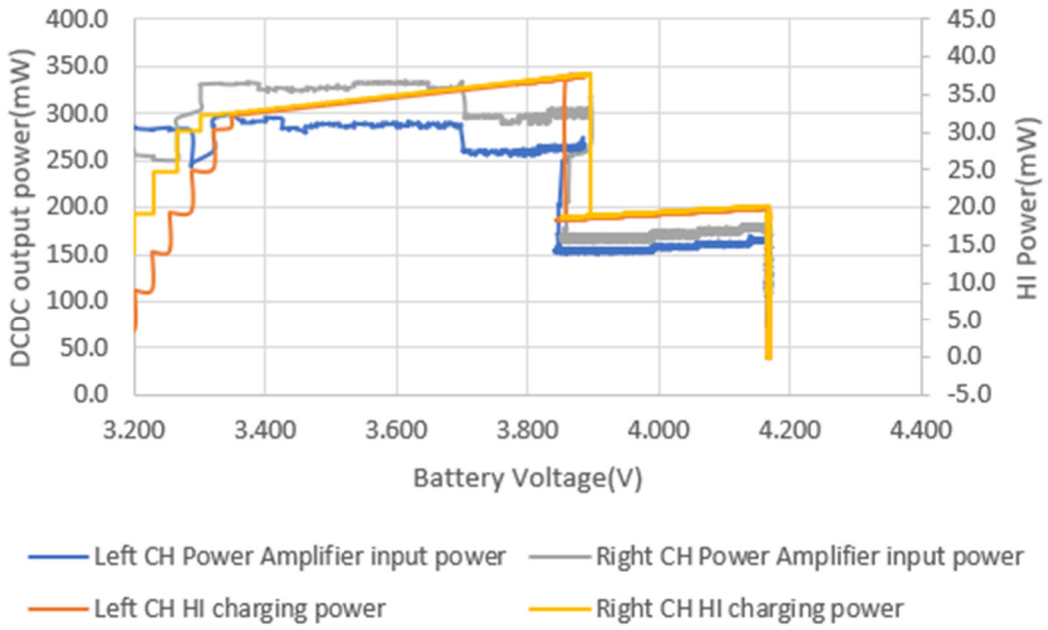
400.0
350.0
300.0
250.0
200.0
150.0
100.0
50.0
0.0
DCDC output power(mW)
45.0
40.0
35.0
30.0
25.0
20.0
15.0
10.0
5.0
0.0
-5.0
HI Power(mW)
3.200
3.400
3.600
3.800
4.000
4.200
4.400
Battery Voltage(V)
Left CH Power Amplifier input power
Right CH Power Amplifier input power
Left CH HI charging power
Right CH HI charging power

Fig. 25