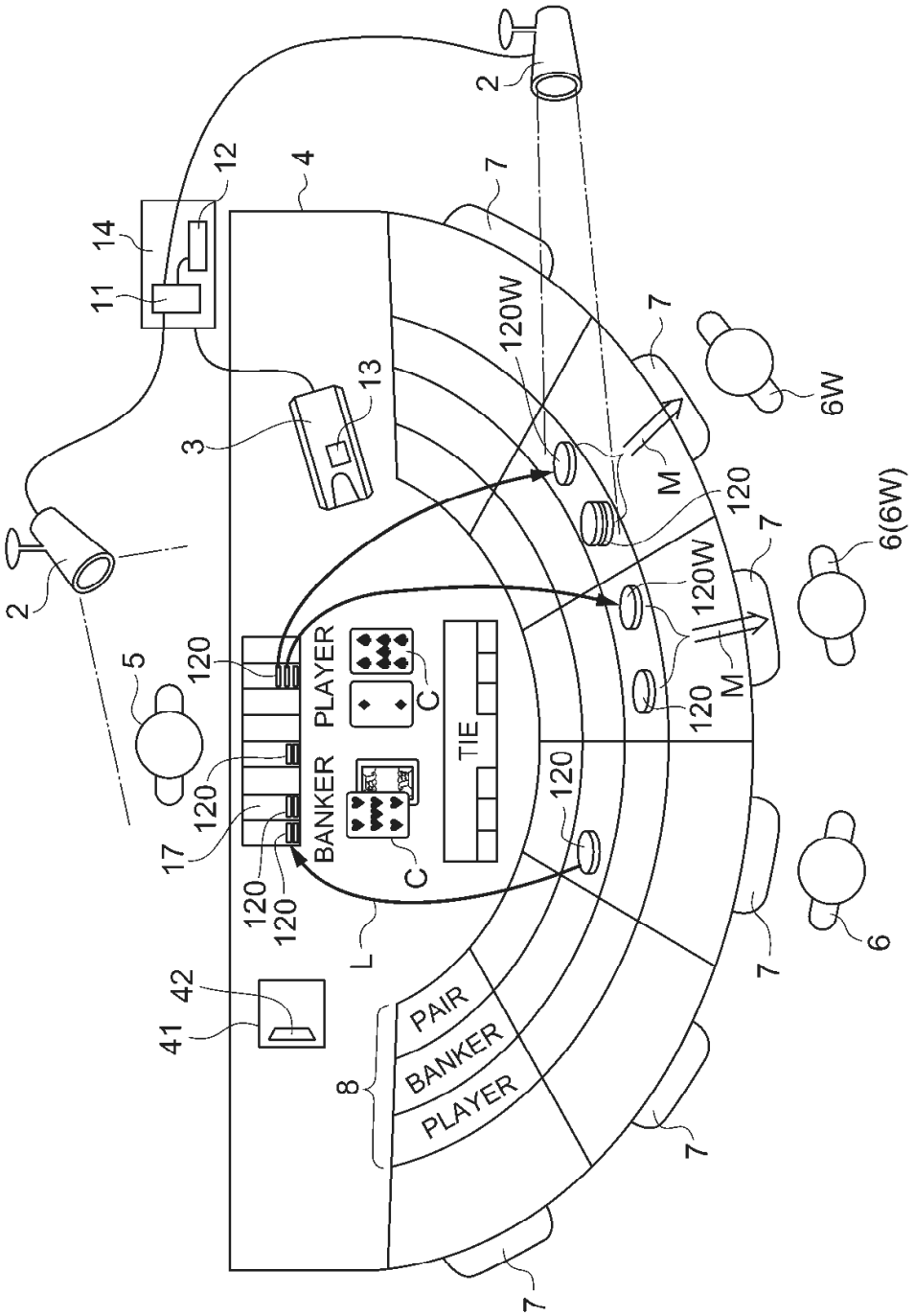
2
4
7
12
14
11
13
3
120W
M
120
6W
6(6W)
5
120
PLAYER
C
TIE
BANKER
17
L
6
42
41
8
PAIR
BANKER
PLAYER

Fig.1

Fig.2A

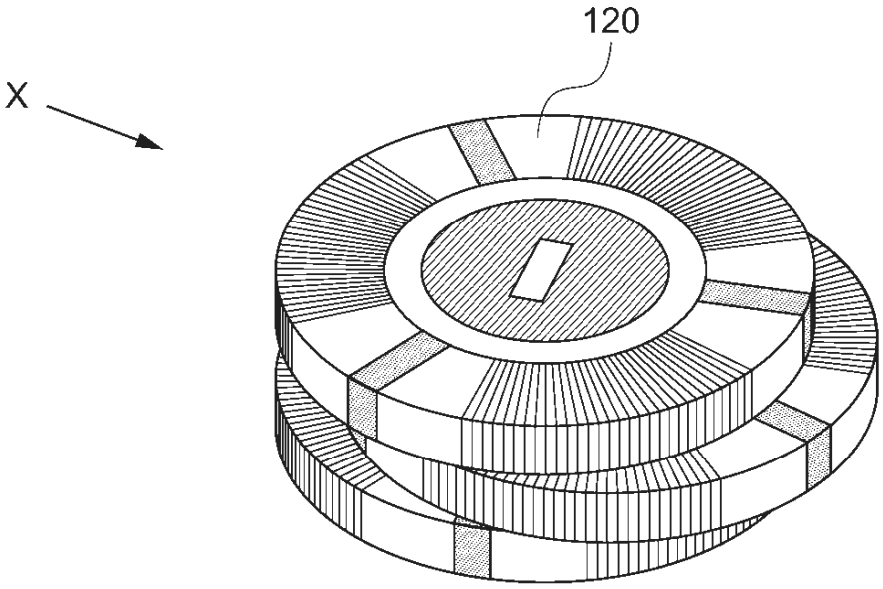

Fig.2B

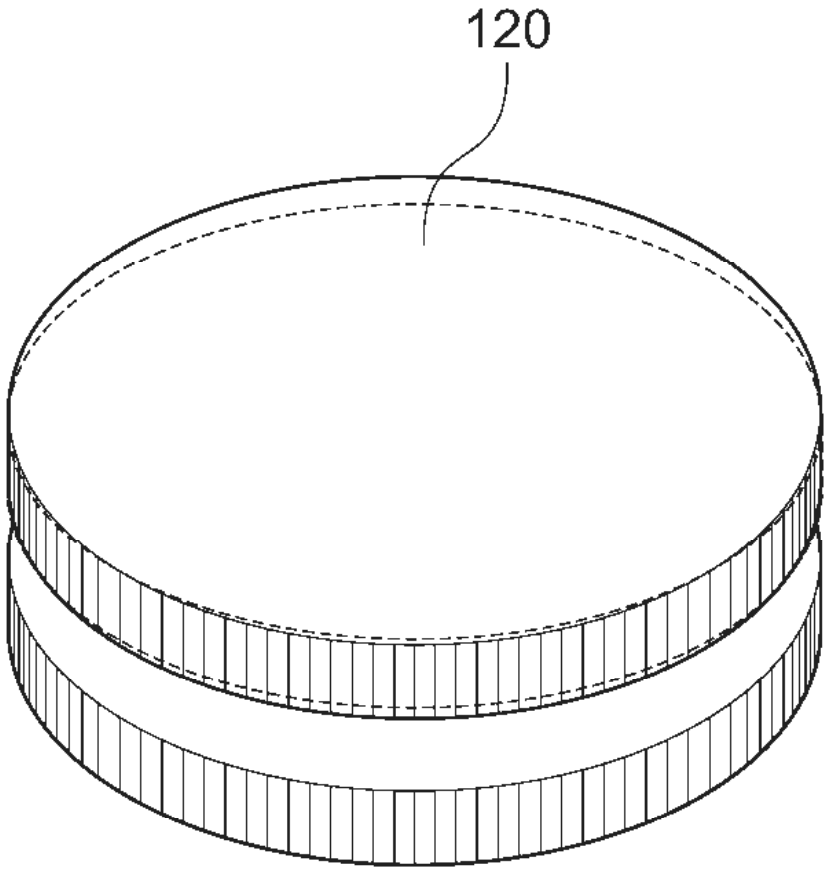

Fig.3



Fig.4A

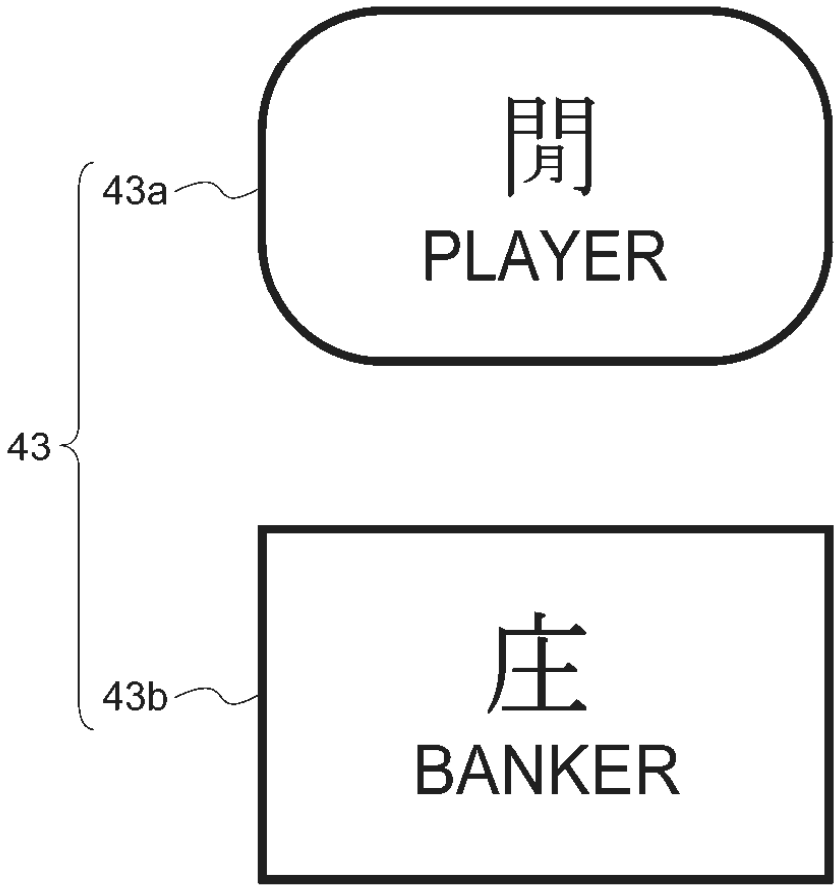

Fig.4B

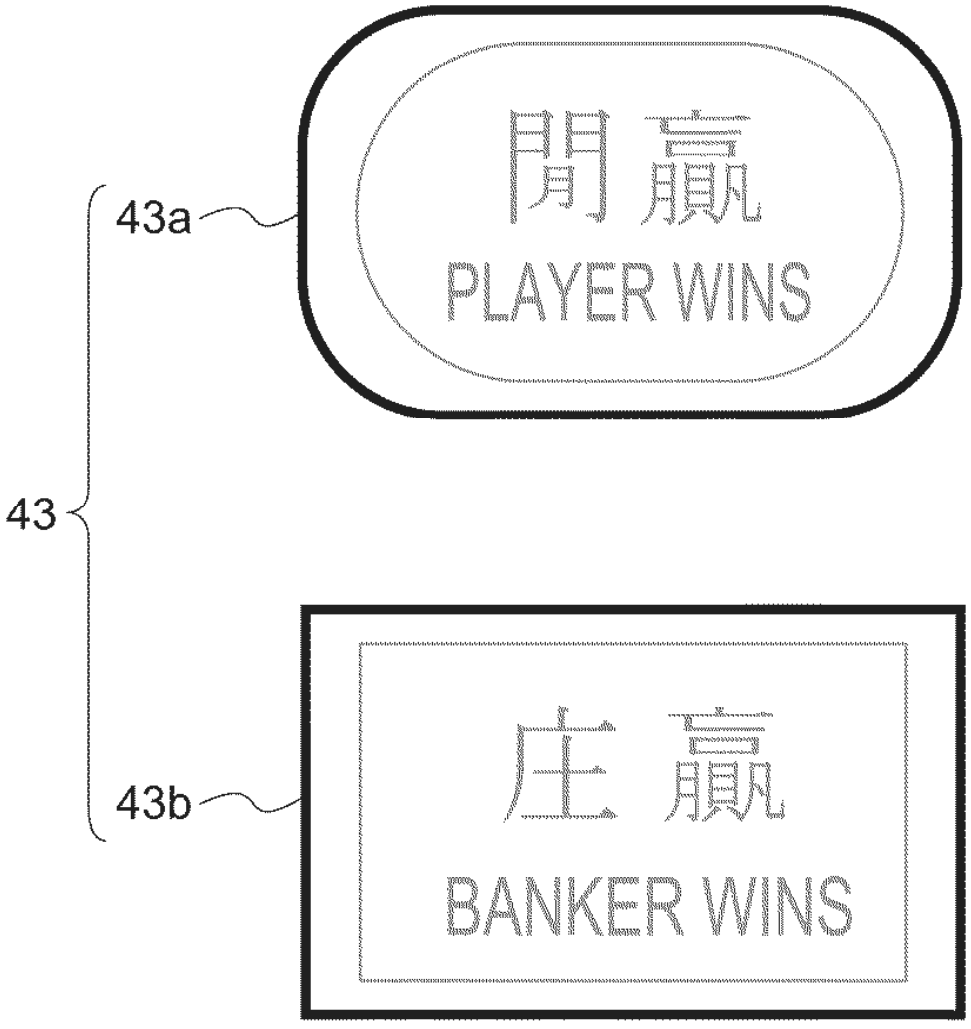

Fig.5

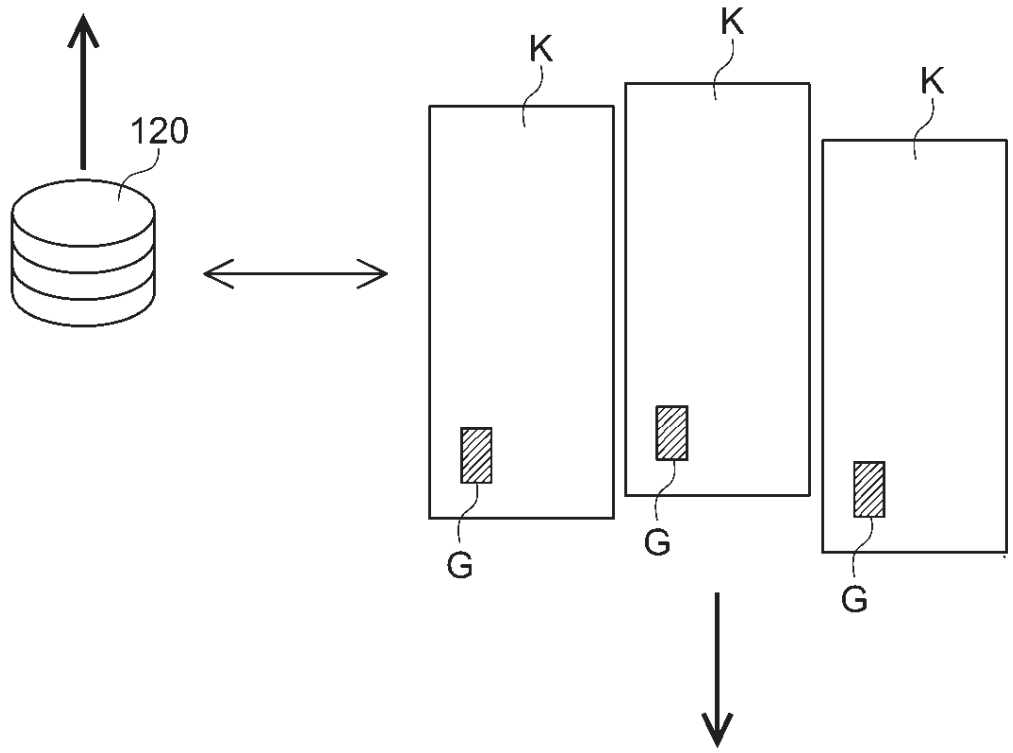

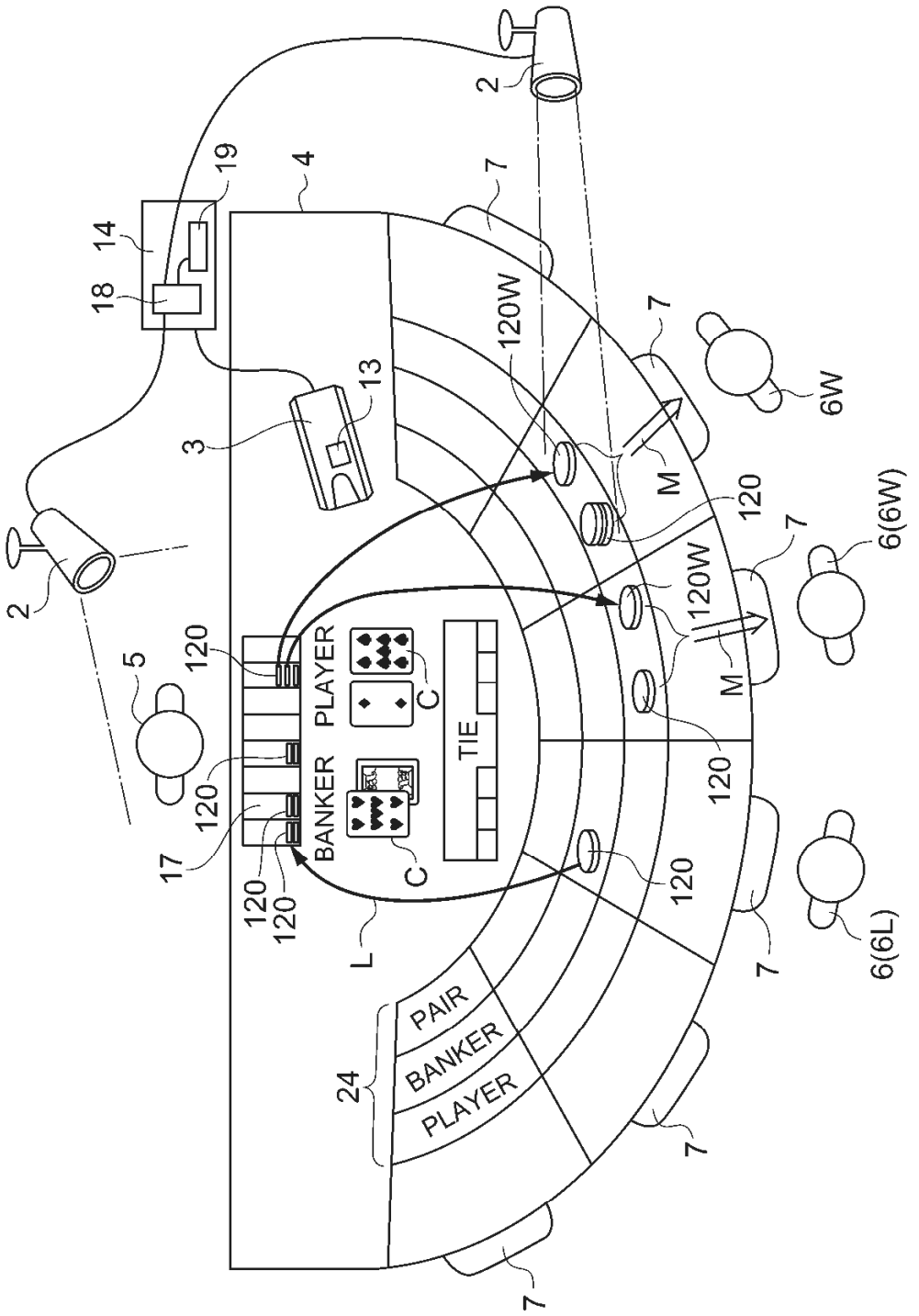
2
19
14
18
4
7
120W
13
3
6W
M
120
6(6W)
5
PLAYER
C
TIE
BANKER
17
L
6(6L)
PAIR
BANKER
PLAYER
24

Fig.6

Fig.7

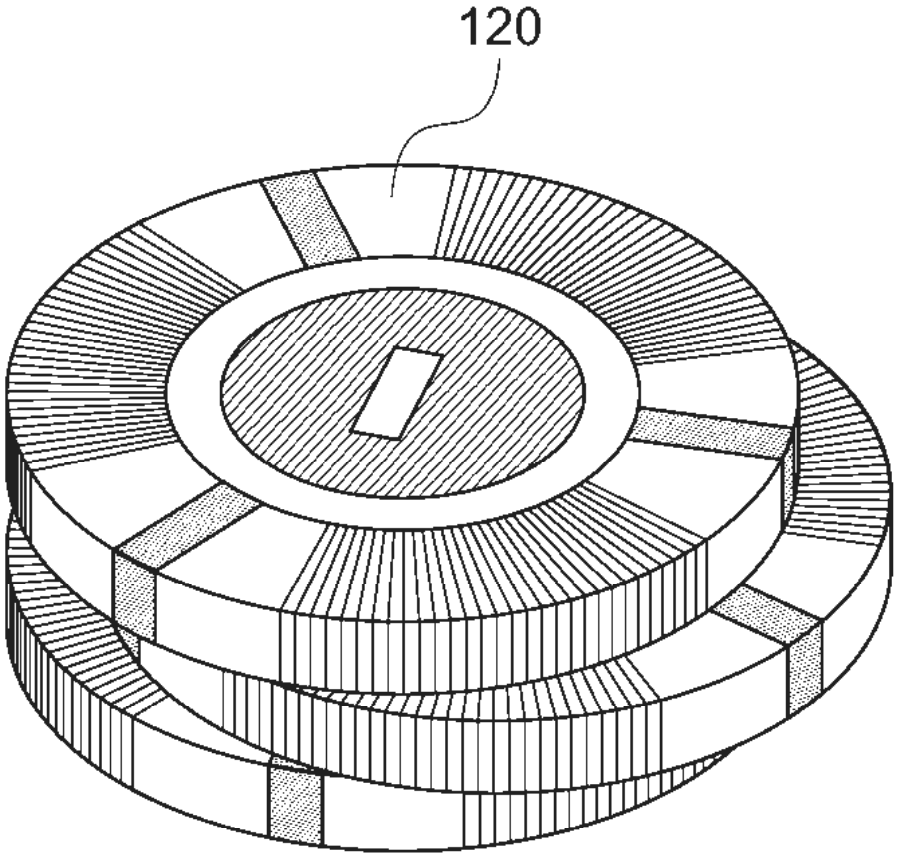

Fig.8

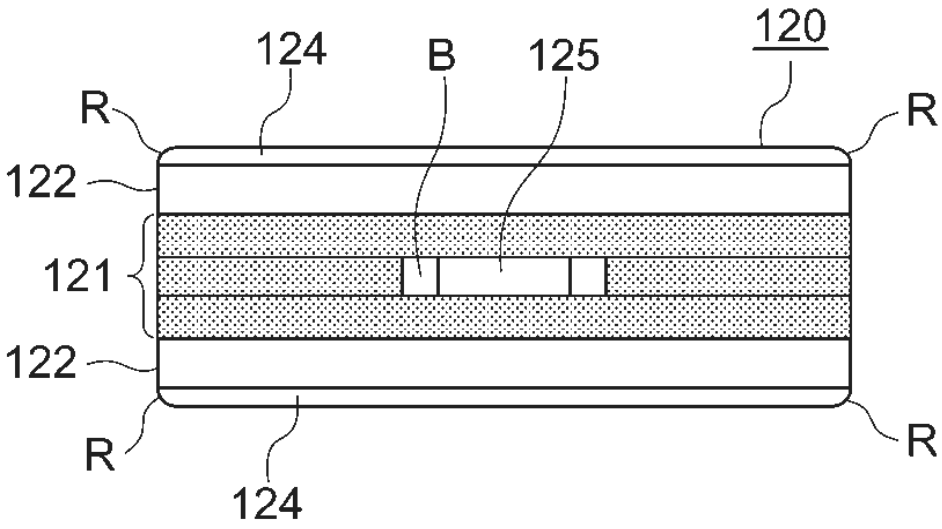

Fig.9A

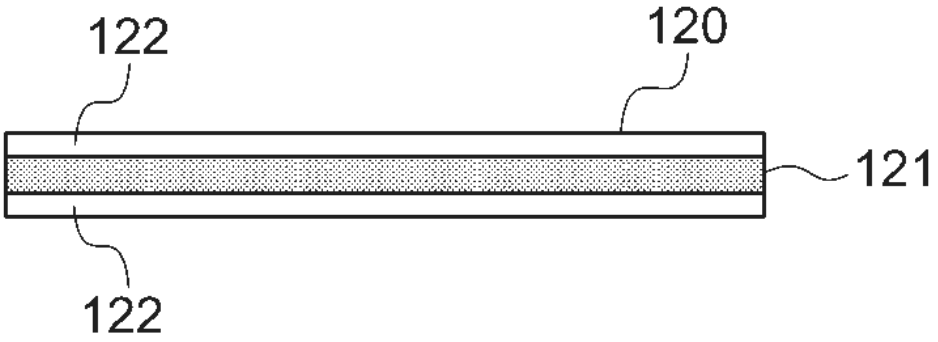

Fig.9B

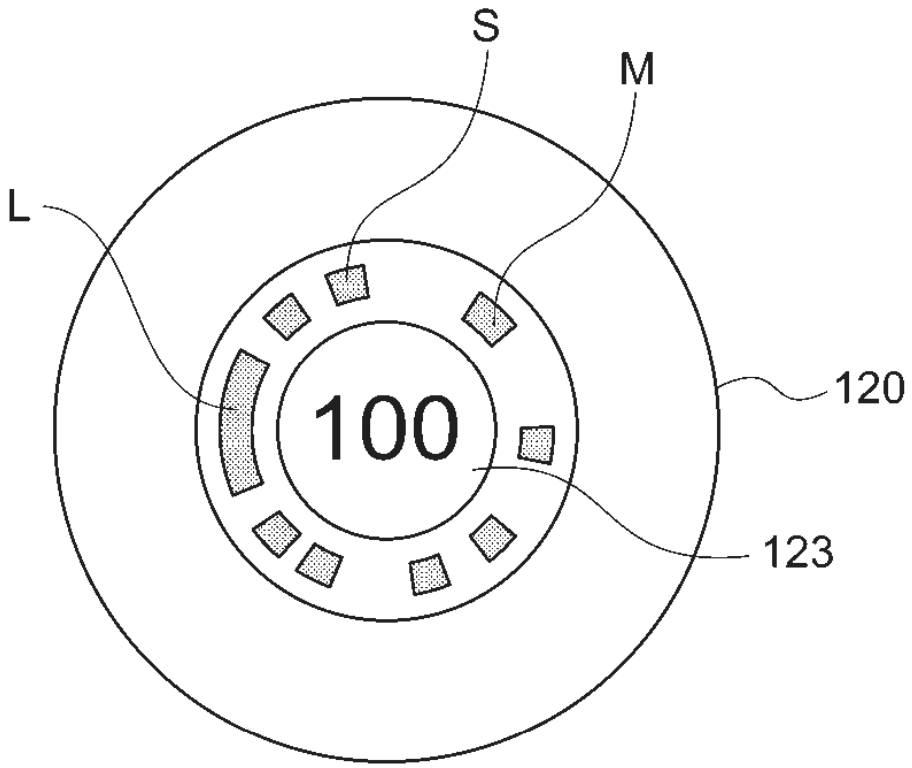

Fig.10A

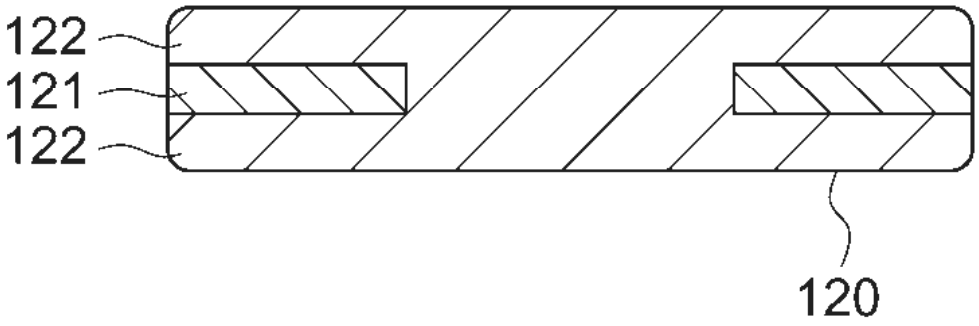

Fig.10B

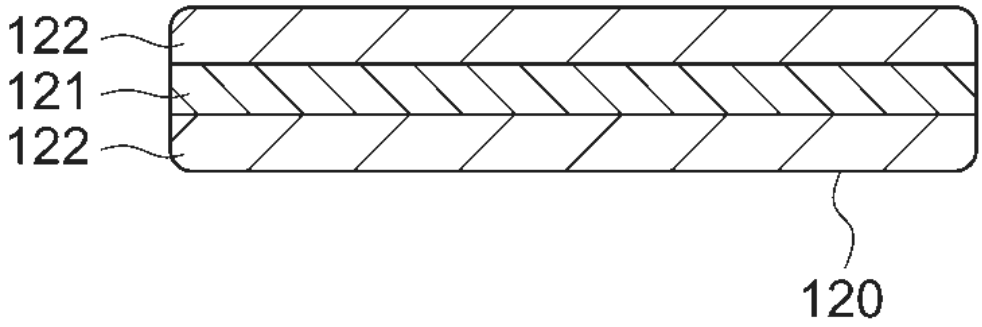

Fig.11

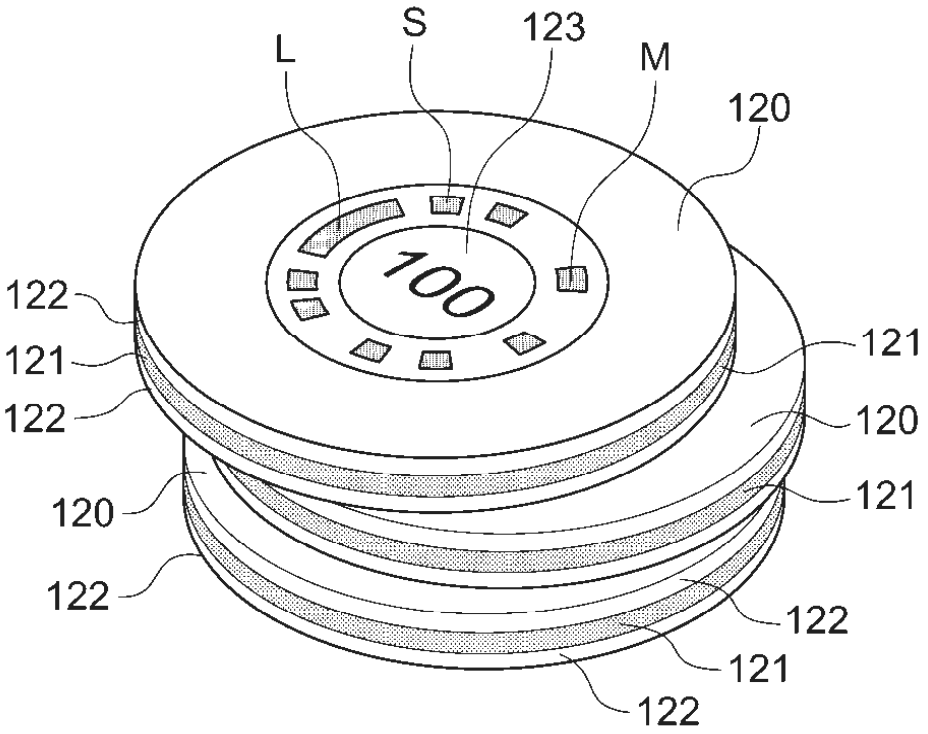

Fig.12

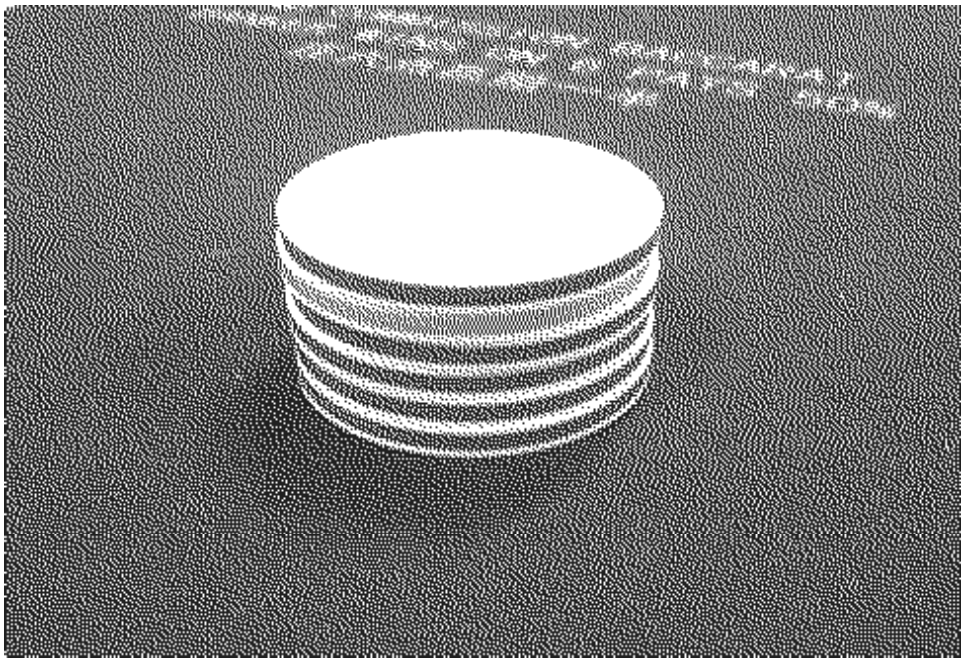

Fig.13A

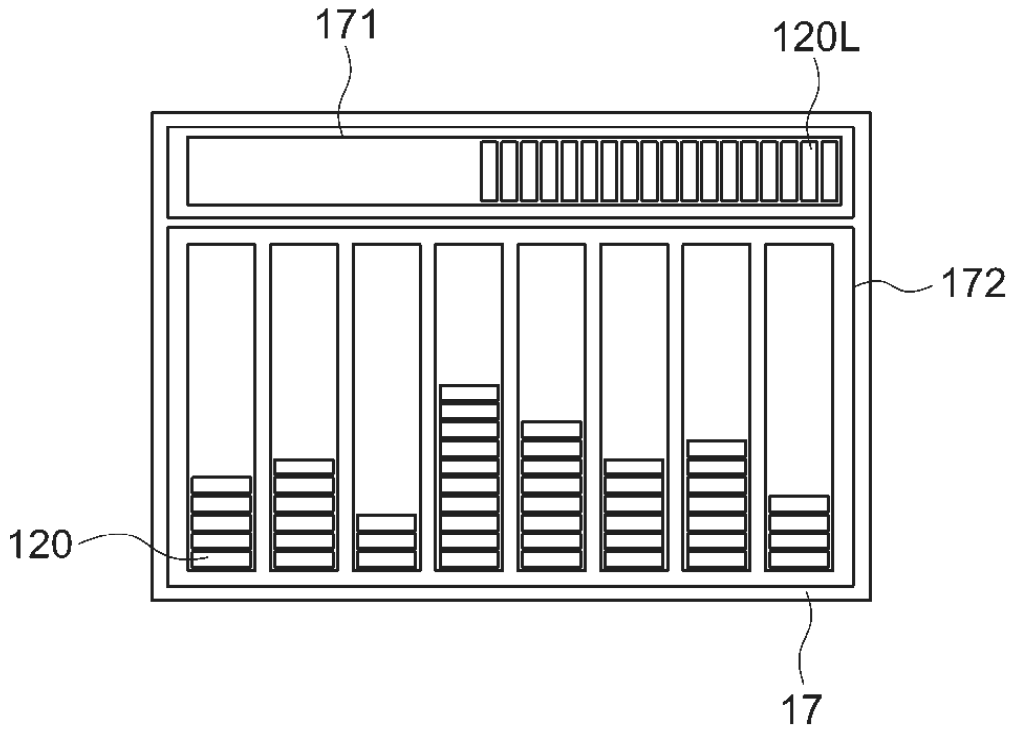

Fig.13B

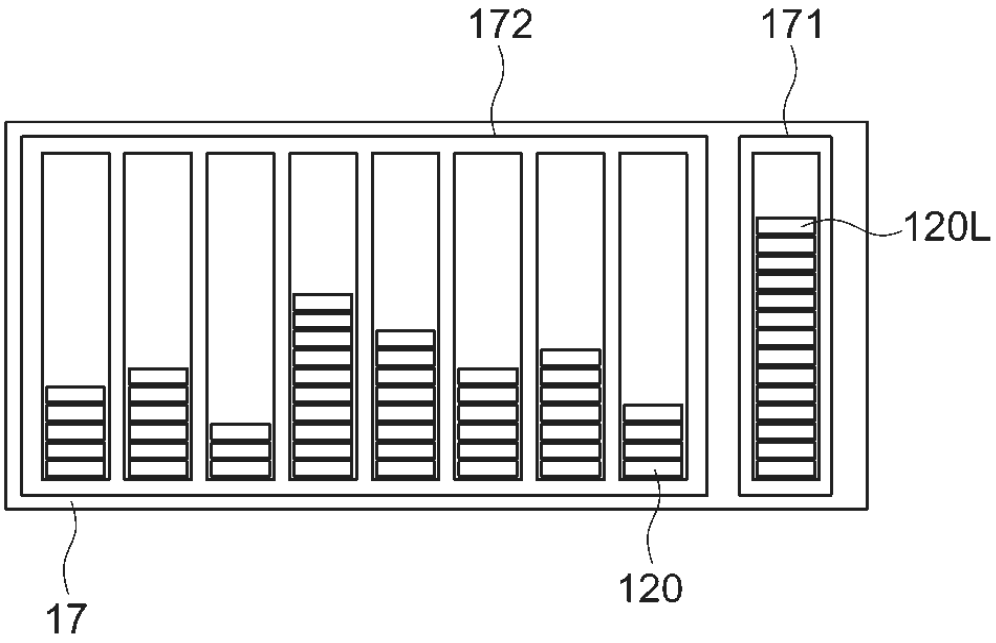

Fig.14A

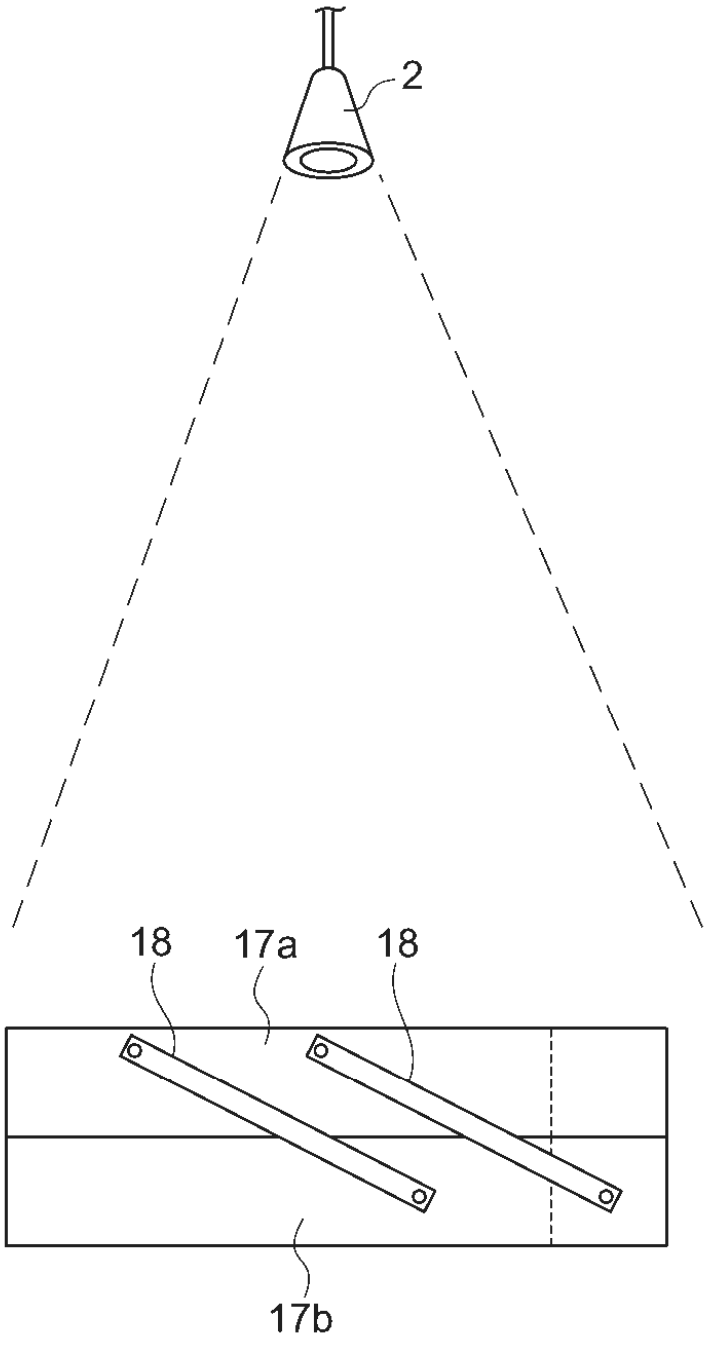

Fig.14B

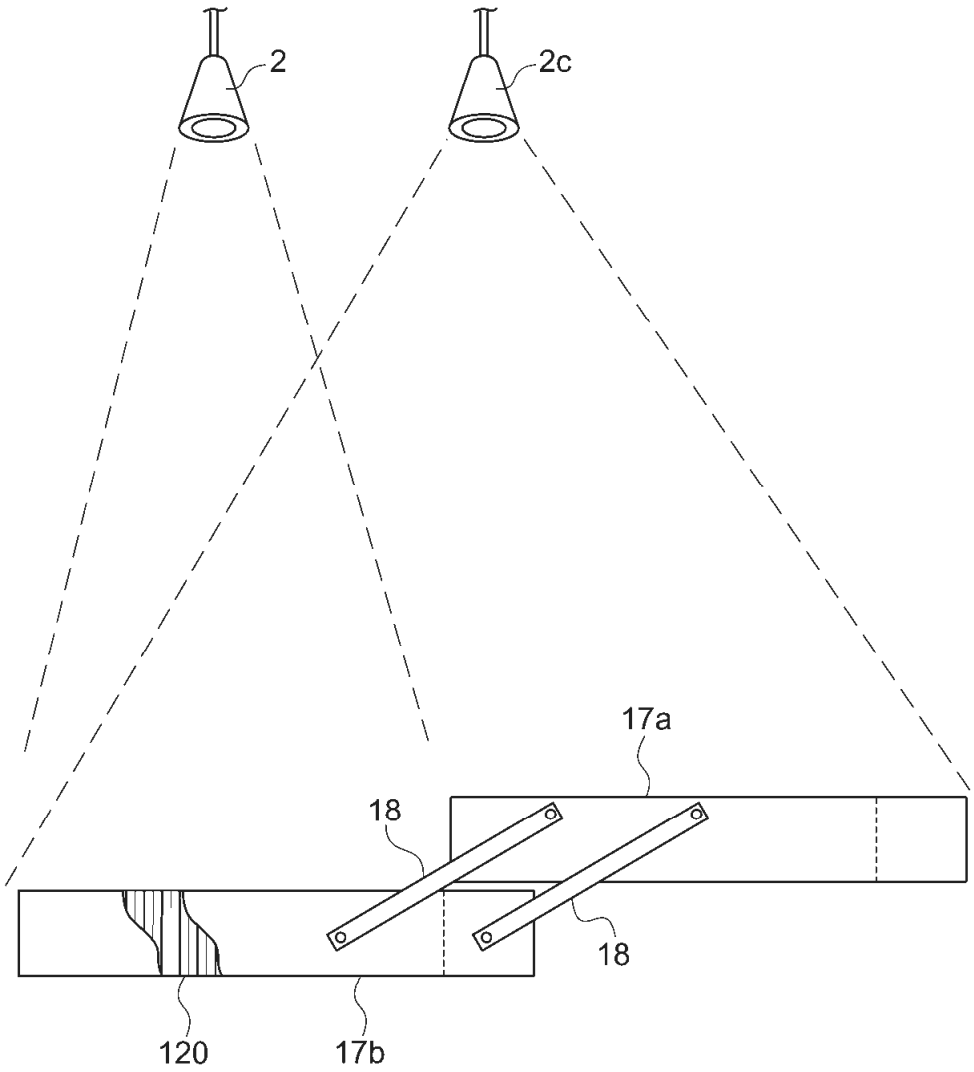

Fig.15

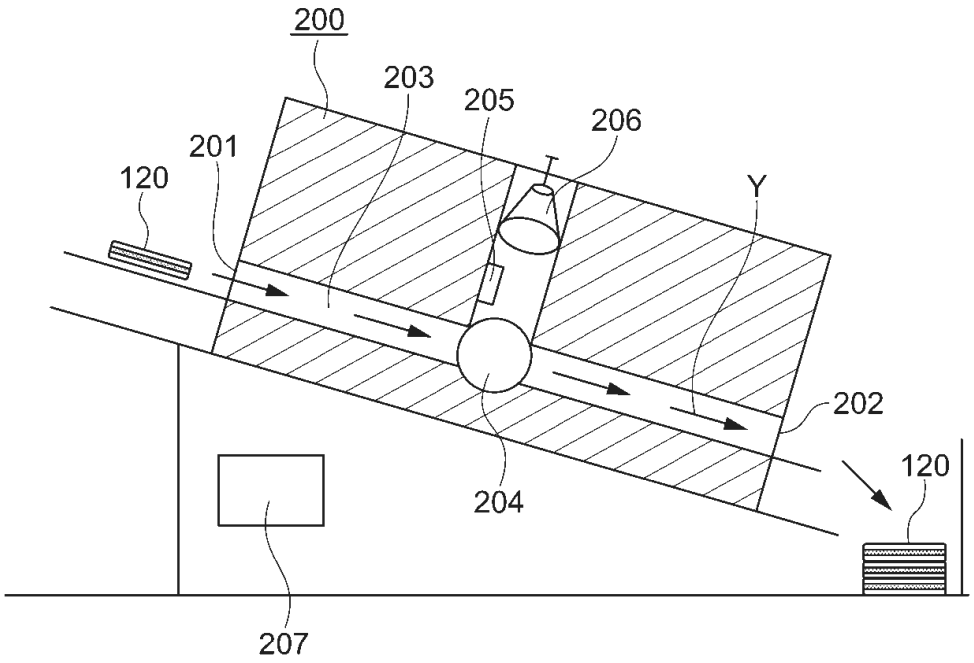

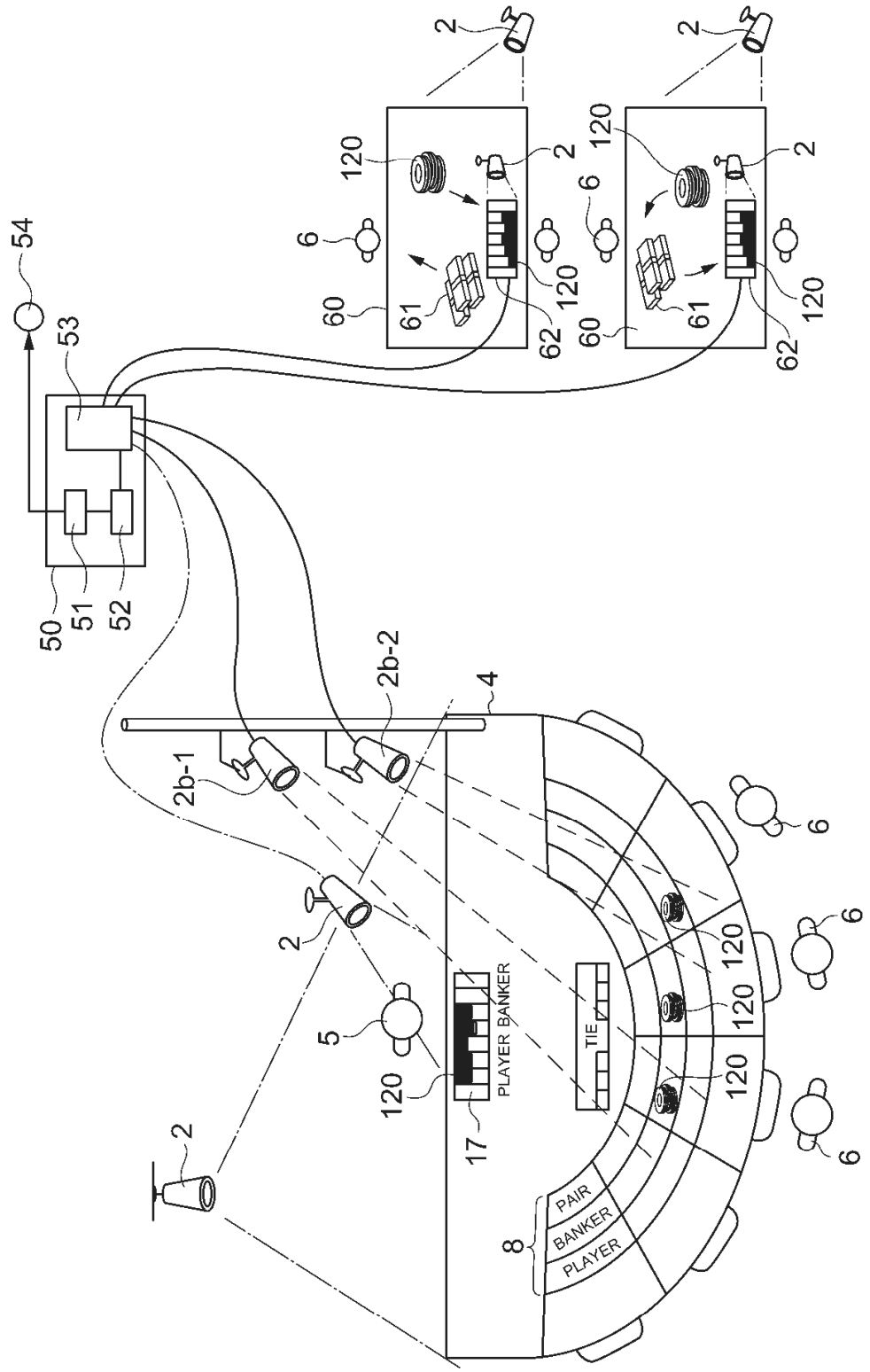
54
53
50
51
52
2b-1
2b-2
4
2
5
120
17
PLAYER
BANKER
TIE
PAIR
BANKER
PLAYER
8
6
60
61
62

Fig.16

Fig.17

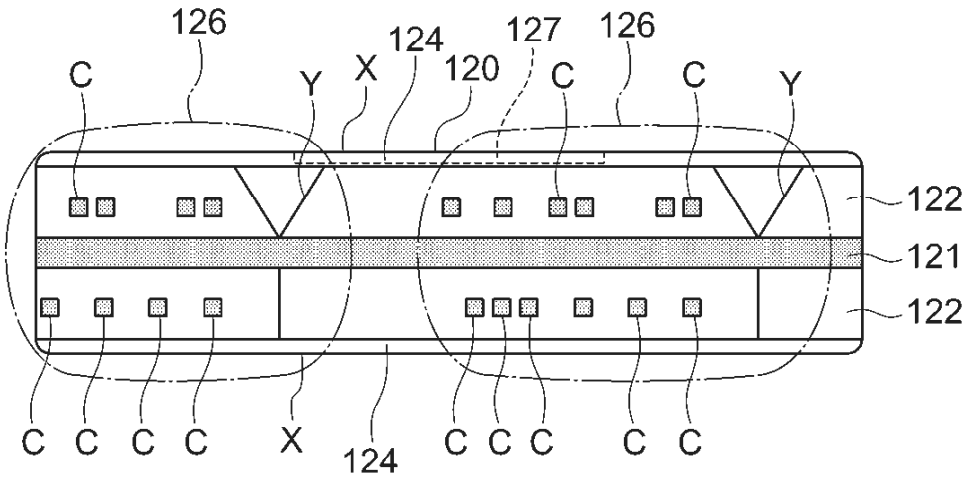

Fig.18

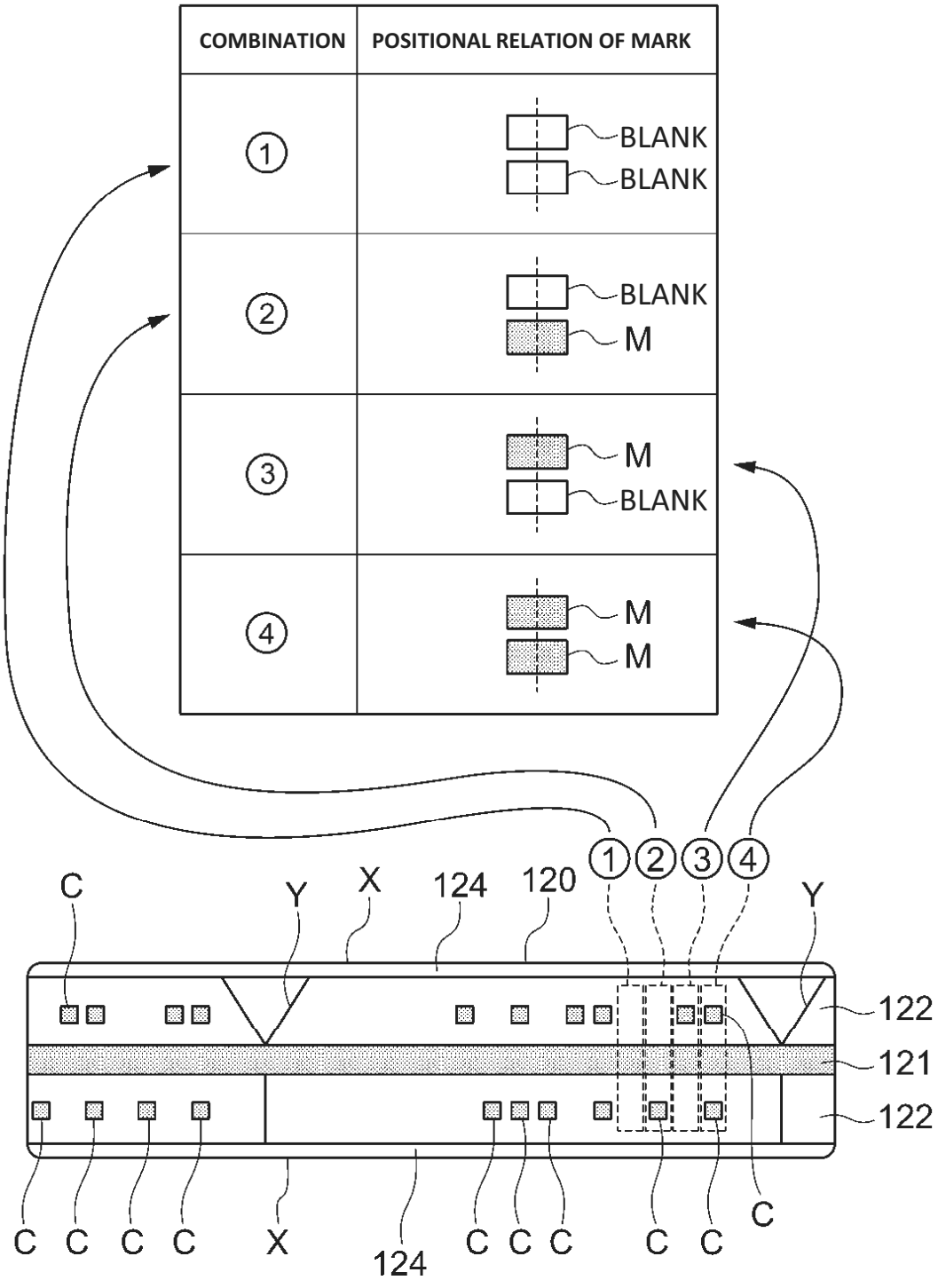
COMBINATION
POSITIONAL RELATION OF MARK
①
BLANK
BLANK
②
BLANK
M
③
M
BLANK
④
M
M
1 2 3 4
C
Y
X
124
120
Y
122
121
122
C C C C X 124 C C C C C C

Fig.19

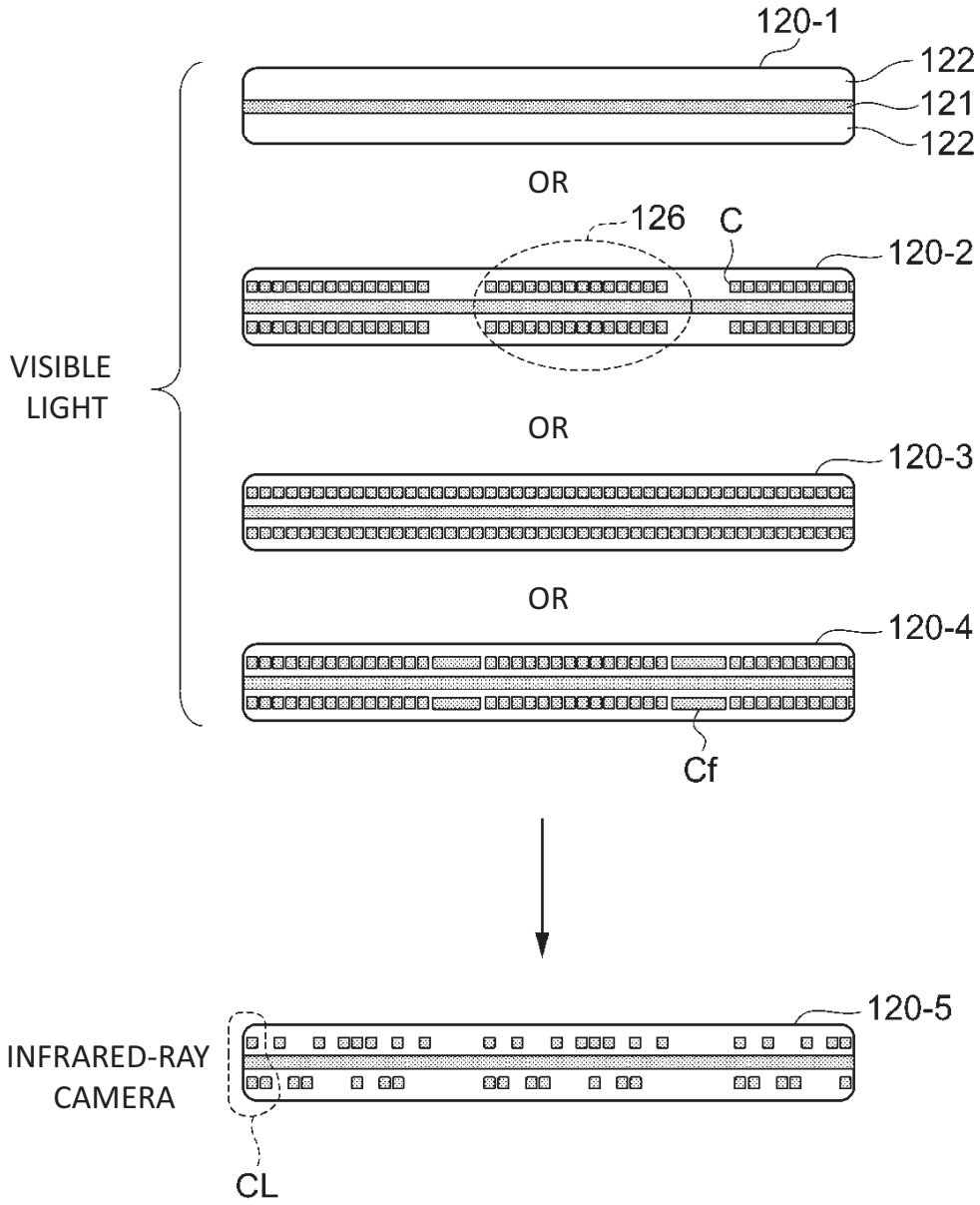
120-1
122
121
122
OR
126
C
120-2
VISIBLE
LIGHT
OR
120-3
OR
120-4
Cf
120-5
INFRARED-RAY
CAMERA
CL

Fig.20A

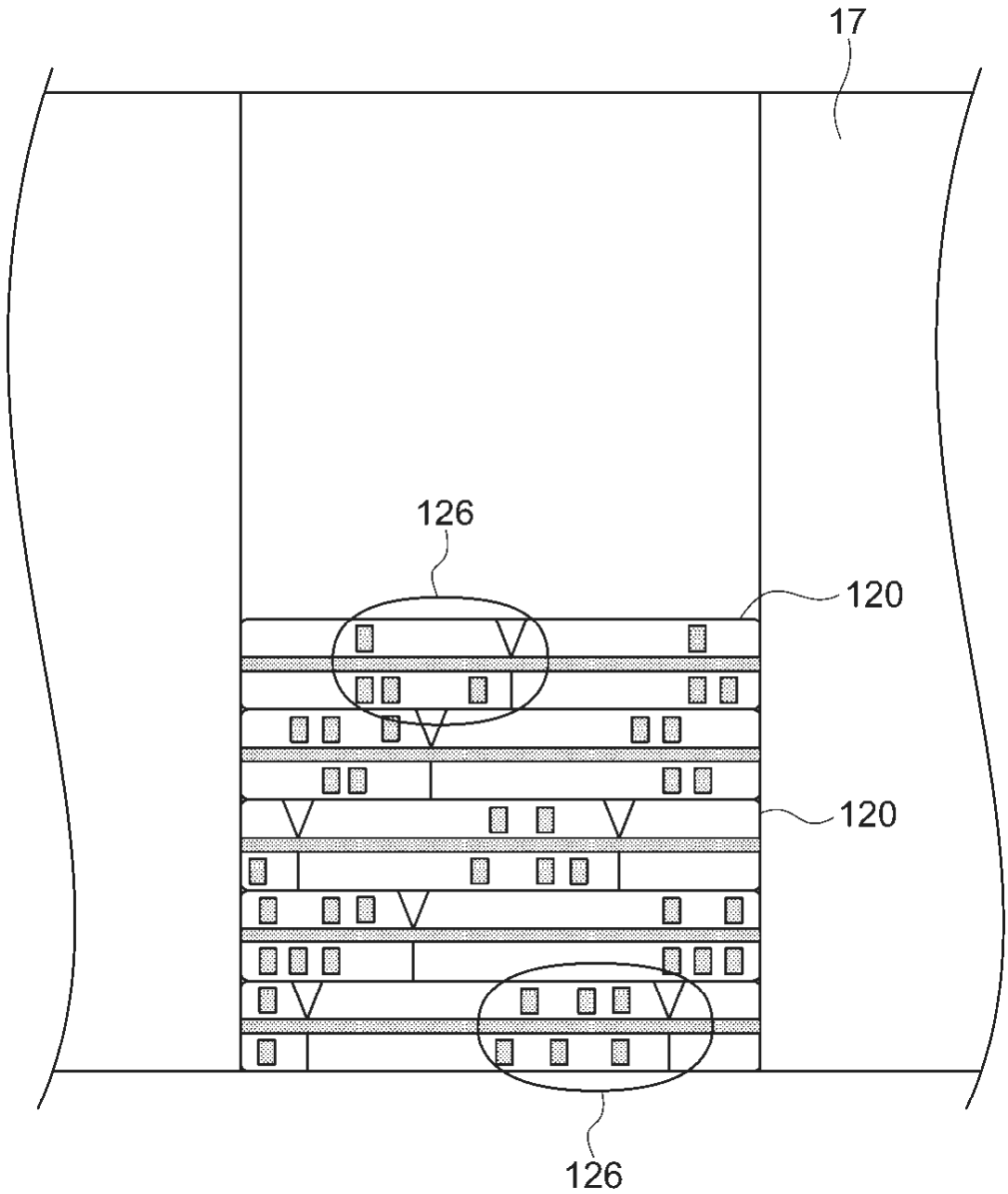

Fig.20B

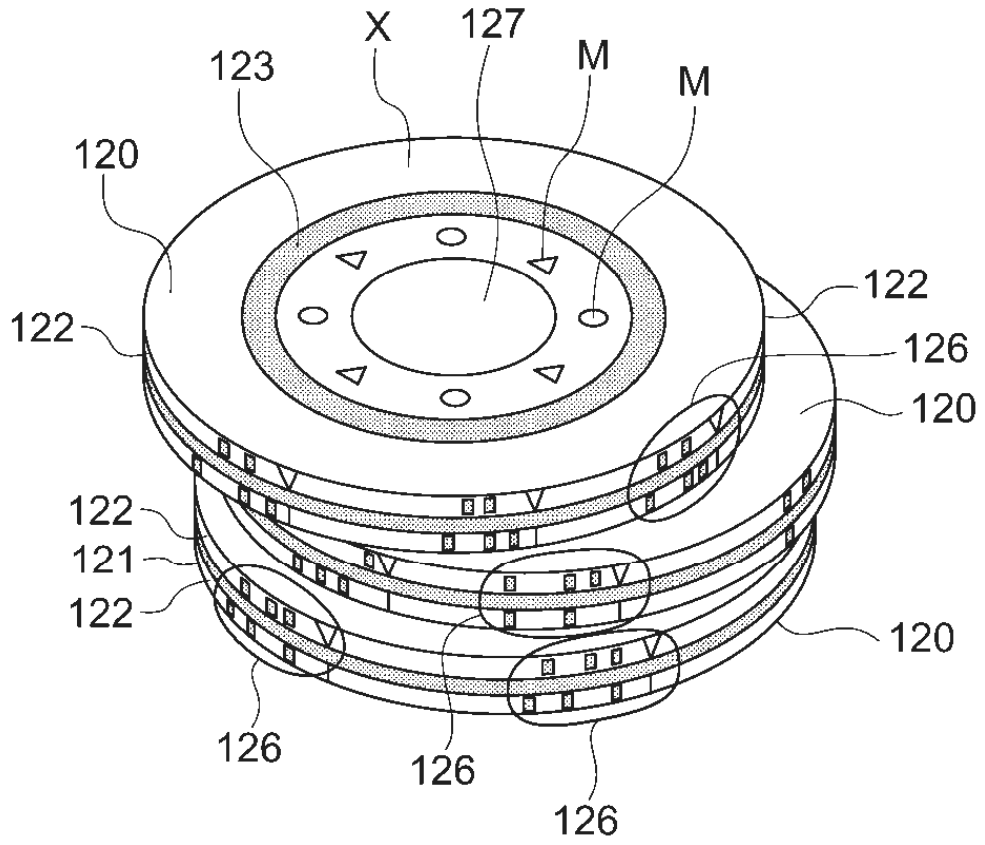

Fig.21

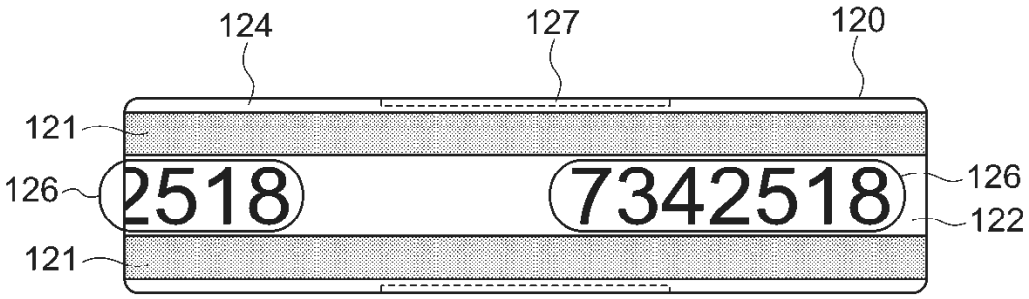

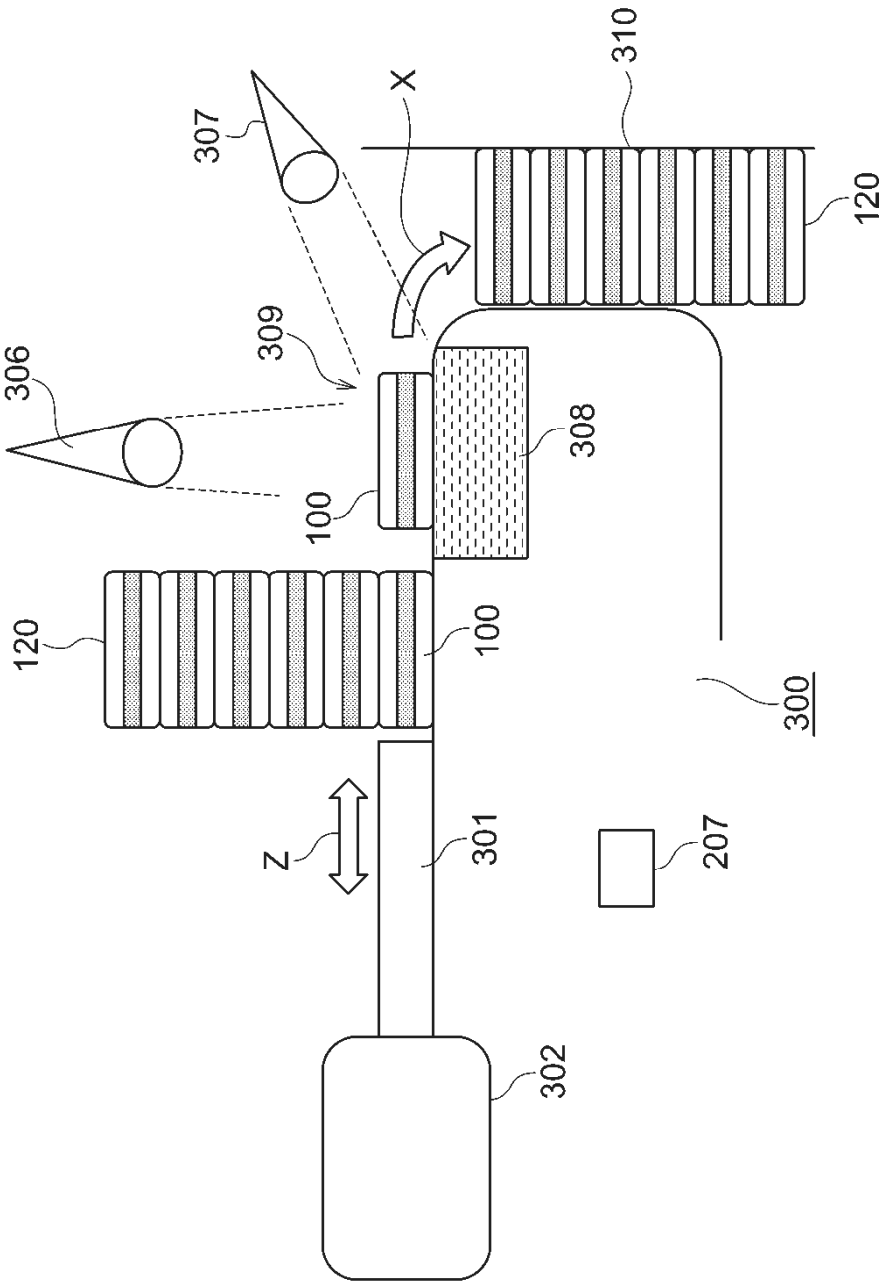

Fig.22

Fig.23

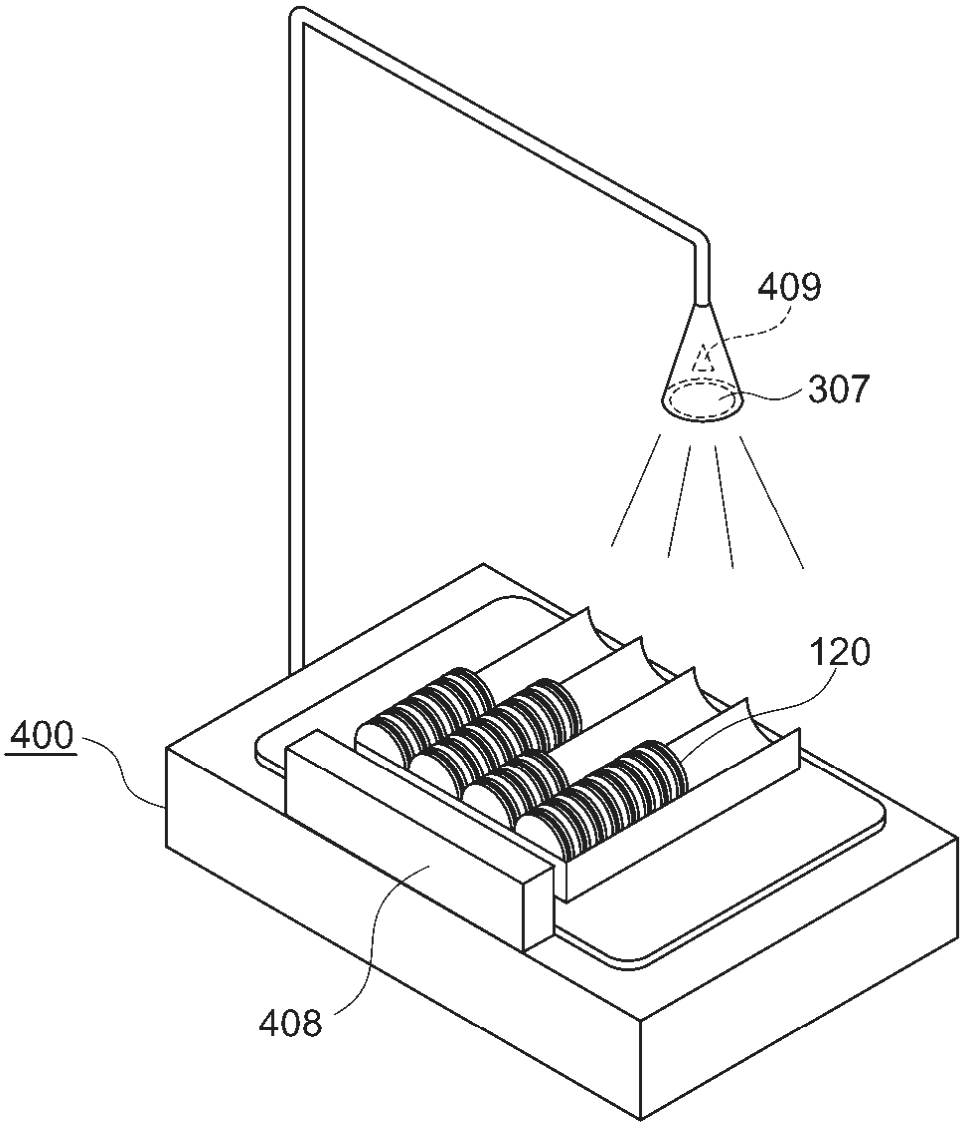

Fig.24

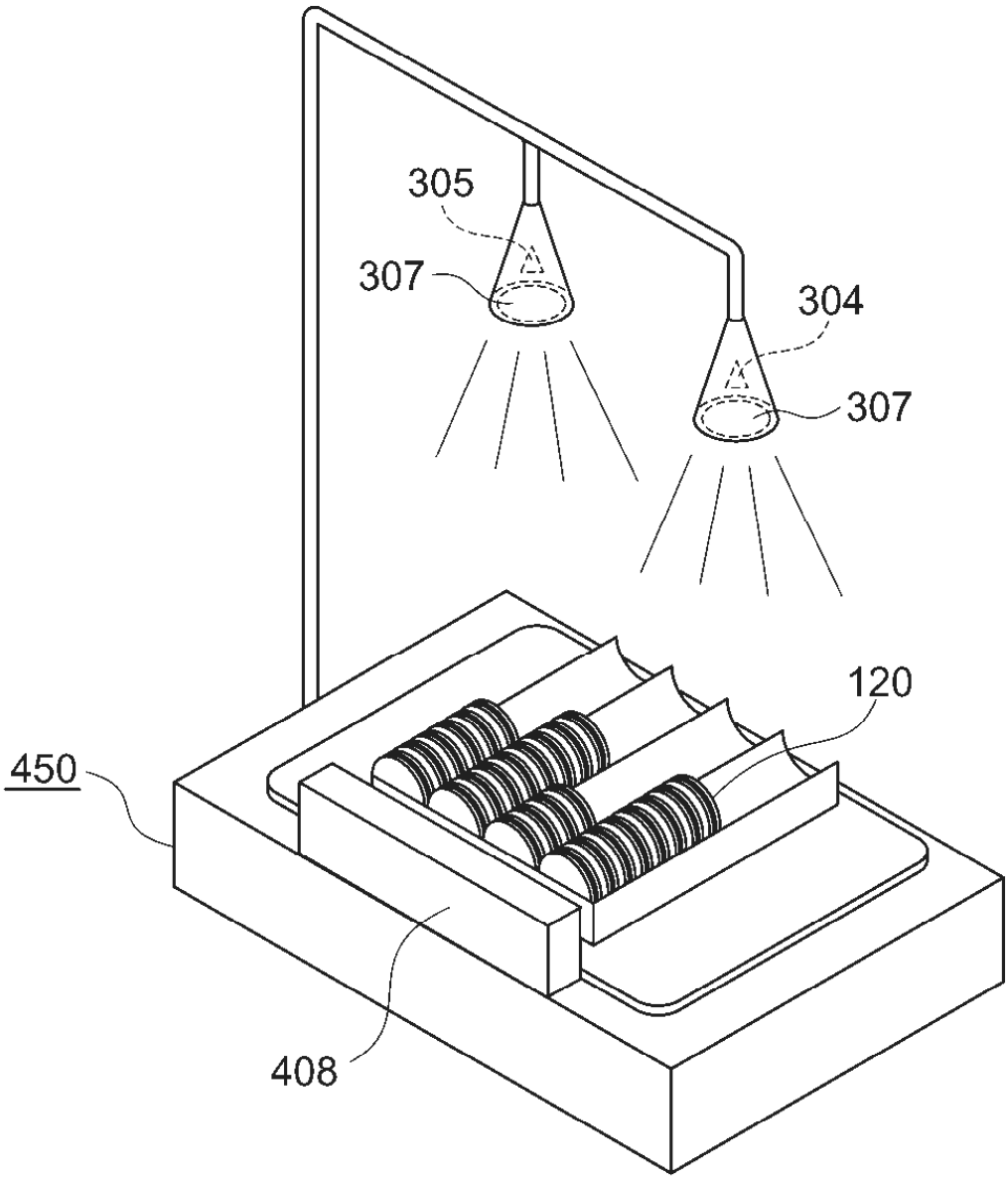

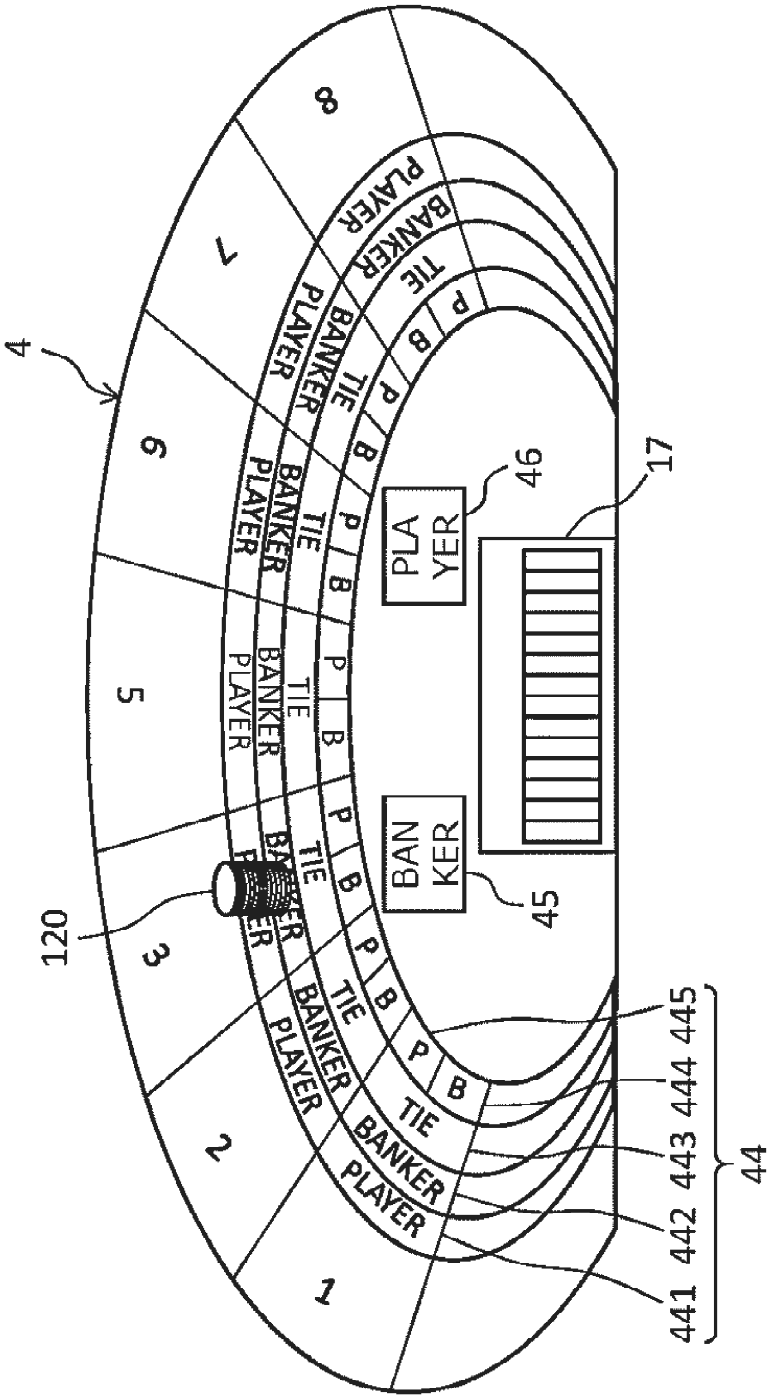
4
8
7
6
5
3
2
1
PLAYER
BANKER
TIE
P
B
PLA YER
BAN KER
46
45
17
120
441
442
443
444
445
44

Fig.25

Fig.26

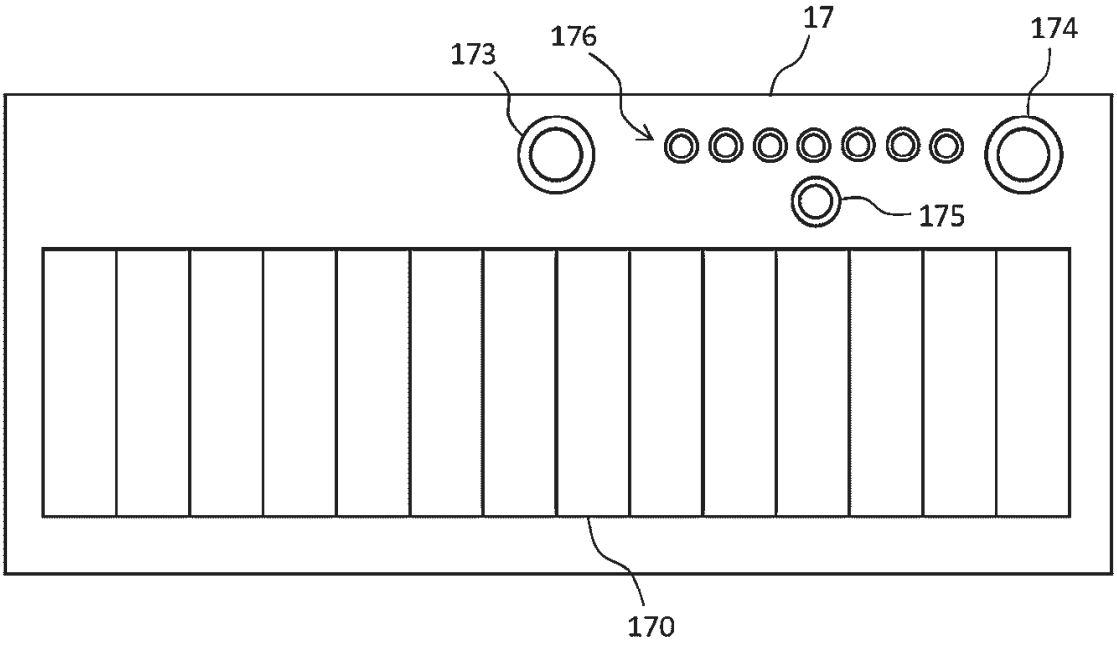

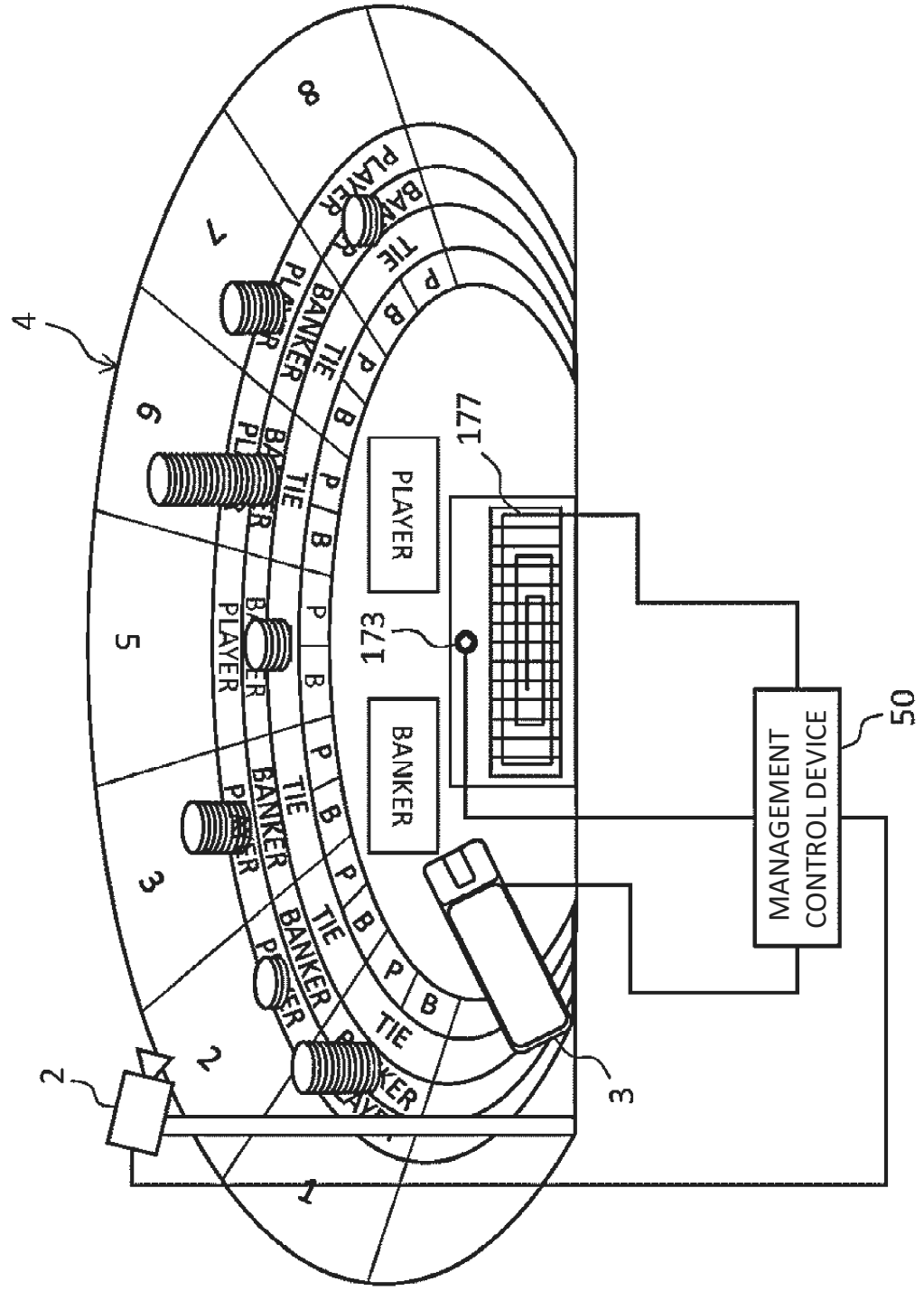
4
1
2
3
5
6
7
8
PLAYER
BANKER
TIE
P
B
177
173
PLAYER
BANKER
MANAGEMENT CONTROL DEVICE
50

Fig.27

Fig.28

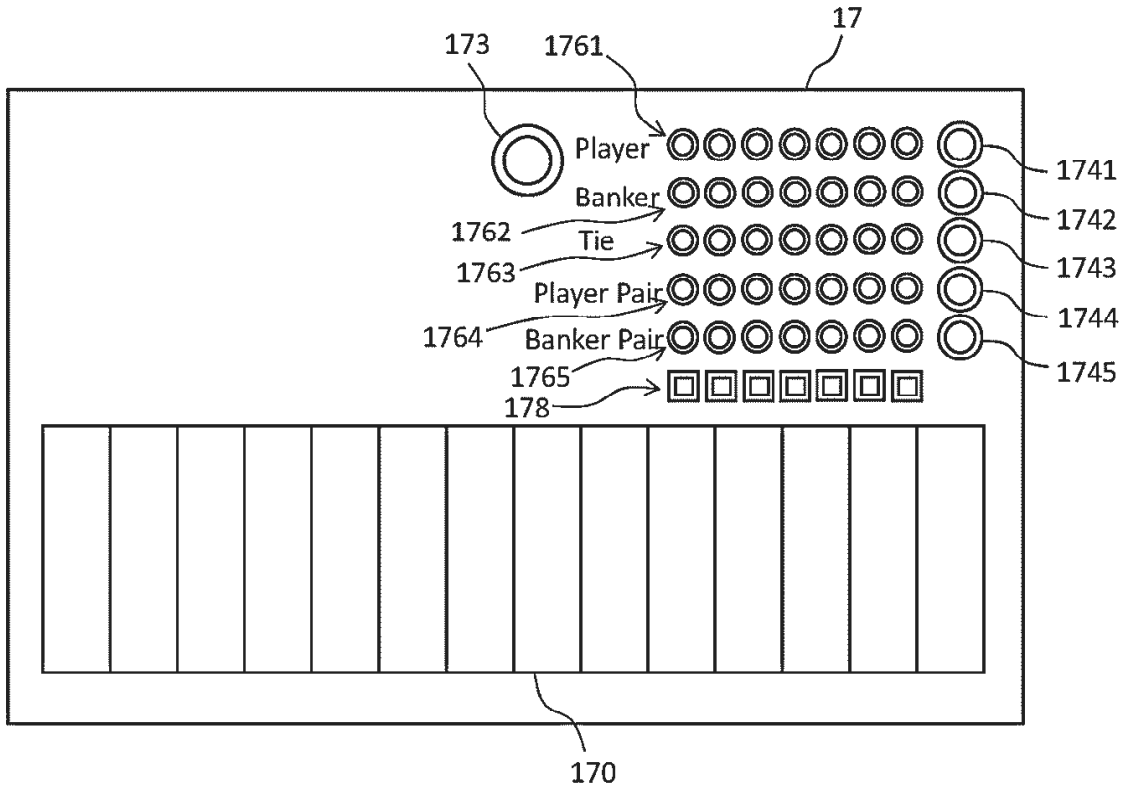
17
173
1761
Player
Banker
Tie
Player Pair
Banker Pair
1762
1763
1764
1765
178
1741
1742
1743
1744
1745
170

Fig.29

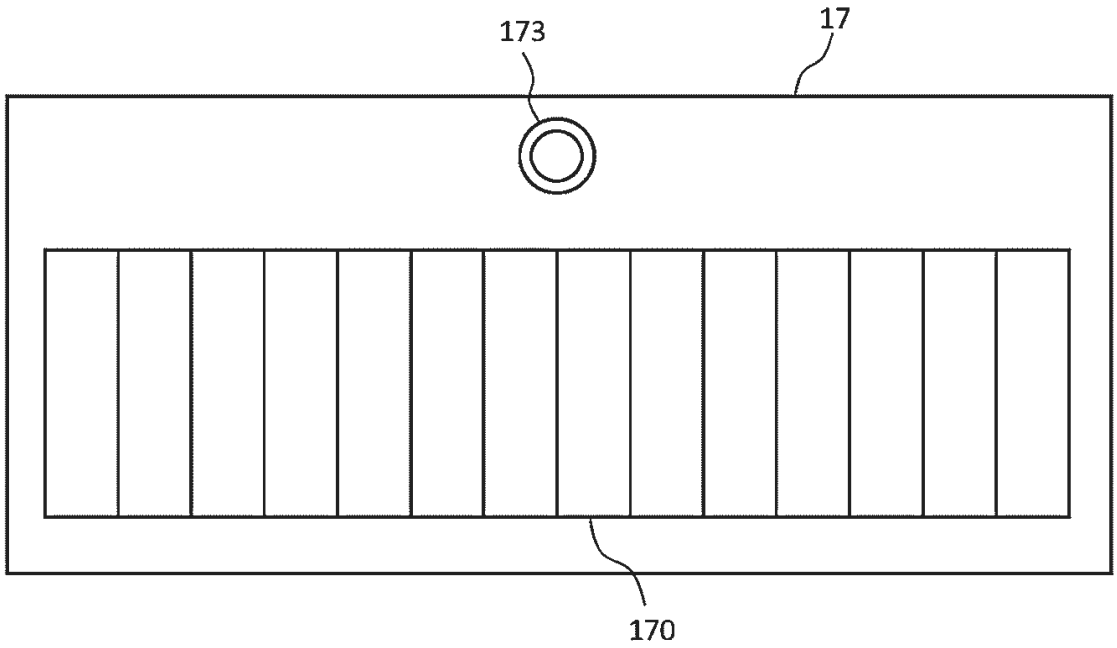

Fig.30

