(12) INTERNATIONAL APPLICATION PUBLISHED UNDER THE PATENT COOPERATION TREATY (PCT)

(19) World Intellectual Property Organization
International Bureau

(43) International Publication Date
30 January 2014 (30.01.2014)

WIPO | PCT

(10) International Publication Number
WO 2014/016742 A1

(51) International Patent Classification:
B01L 3/00 (2006.01) *B29C 49/00* (2006.01)

(21) International Application Number:
PCT/IB2013/055925

(22) International Filing Date:
18 July 2013 (18.07.2013)

(25) Filing Language: English

(26) Publication Language: English

(30) Priority Data:
1257127 23 July 2012 (23.07.2012) FR

(71) Applicant *(for all designated States except US)*: **EMD MILLIPORE CORPORATION** [US/US]; 290 Concord Road, Billerica, Massachusetts 01821 (US).

(72) Inventors; and

(71) Applicants *(for US only)*: **TUCCELLI, Ronald** [US/US]; 56 Highland Avenue, Winchester, 01890 (US). **CIROU, Sébastien** [FR/FR]; 7 rue Sainte Odile, F-67300 Schiltigheim (FR). **BUISSON, Virginie** [FR/FR]; 15 rue des prés, F-67202 Wolfisheim (FR). **ABOUAYAD EL IDRISSI, Christine** [FR/FR]; 7 place Martin Schongauer, F-67114 Eschau (FR). **KELLY, Jim** [US/US]; 24 Fairview Avenue, Melrose, 02176 (US).

(74) Agent: **SANTARELLI**; PO Box 237, 14 avenue de la Grande Armée, F-75017 Paris cedex 17 (FR).

(81) Designated States *(unless otherwise indicated, for every kind of national protection available)*: AE, AG, AL, AM, AO, AT, AU, AZ, BA, BB, BG, BH, BN, BR, BW, BY, BZ, CA, CH, CL, CN, CO, CR, CU, CZ, DE, DK, DM, DO, DZ, EC, EE, EG, ES, FI, GB, GD, GE, GH, GM, GT, HN, HR, HU, ID, IL, IN, IS, JP, KE, KG, KN, KP, KR, KZ, LA, LC, LK, LR, LS, LT, LU, LY, MA, MD, ME, MG, MK, MN, MW, MX, MY, MZ, NA, NG, NI, NO, NZ, OM, PA, PE, PG, PH, PL, PT, QA, RO, RS, RU, RW, SC, SD, SE, SG, SK, SL, SM, ST, SV, SY, TH, TJ, TM, TN, TR, TT, TZ, UA, UG, US, UZ, VC, VN, ZA, ZM, ZW.

(84) Designated States *(unless otherwise indicated, for every kind of regional protection available)*: ARIPO (BW, GH, GM, KE, LR, LS, MW, MZ, NA, RW, SD, SL, SZ, TZ, UG, ZM, ZW), Eurasian (AM, AZ, BY, KG, KZ, RU, TJ, TM), European (AL, AT, BE, BG, CH, CY, CZ, DE, DK, EE, ES, FI, FR, GB, GR, HR, HU, IE, IS, IT, LT, LU, LV, MC, MK, MT, NL, NO, PL, PT, RO, RS, SE, SI, SK, SM, TR), OAPI (BF, BJ, CF, CG, CI, CM, GA, GN, GQ, GW, KM, ML, MR, NE, SN, TD, TG).

Declarations under Rule 4.17:

— *of inventorship (Rule 4.17(iv))*

Published:

— *with international search report (Art. 21(3))*

[Continued on next page]

(54) **Title**: CIRCUIT FOR BIOLOGICAL LIQUID COMPRISING A PINCH VALVE

Fig. 4

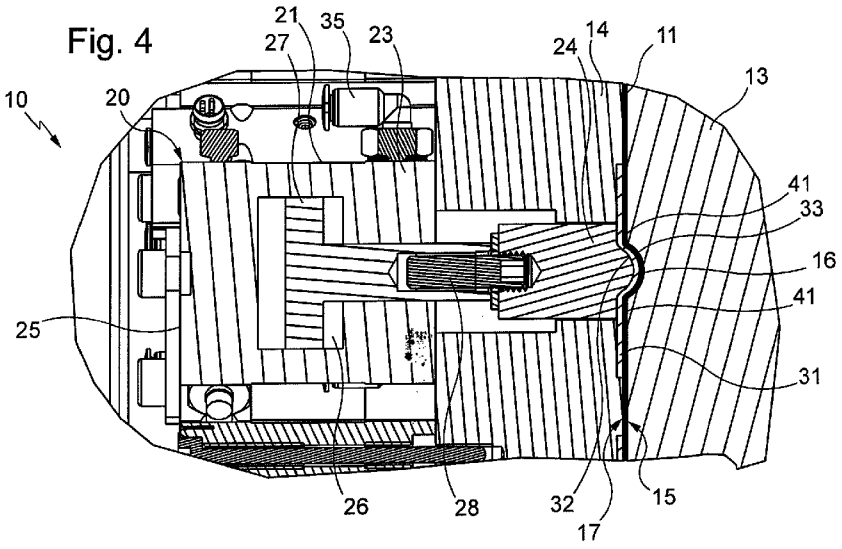

(57) **Abstract**: The invention concerns a circuit comprising a bag (11) comprising two flexible films (45, 46) and a press (10) comprising a first (14) and a second (13) shell clamping the bag to form pipes having a passage and edges (41); the first shell comprising a valve (20) which comprises a movable member (24) and a pad (31), which pad has a resting configuration in which a second face (33) of the pad is concave and locally delimits a channel (18) and a pinching configuration in which the second face (33) is convex; said movable member and said pad being configured so that, when said valve is in closed position and said pad in pinching configuration, said passage is pinched by said movable member against said second shell channel and said edges (41) are pinched flat by said movable member against said second shell (13).

WO 2014/016742 A1

— *before the expiration of the time limit for amending the claims and to be republished in the event of receipt of amendments (Rule 48.2(h))*