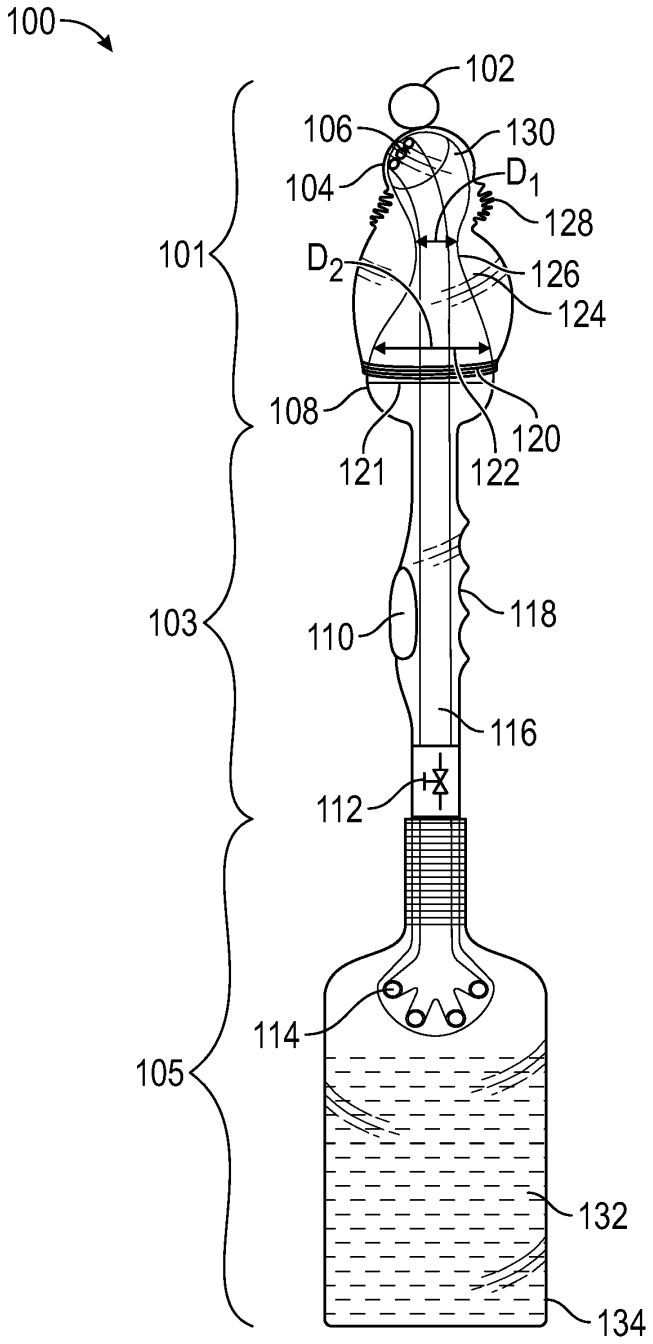
100
102
106
130
104
D_1
128
101
D_2
126
124
108
120
121
122
103
110
118
116
112
114
105
132
134

FIG. 1

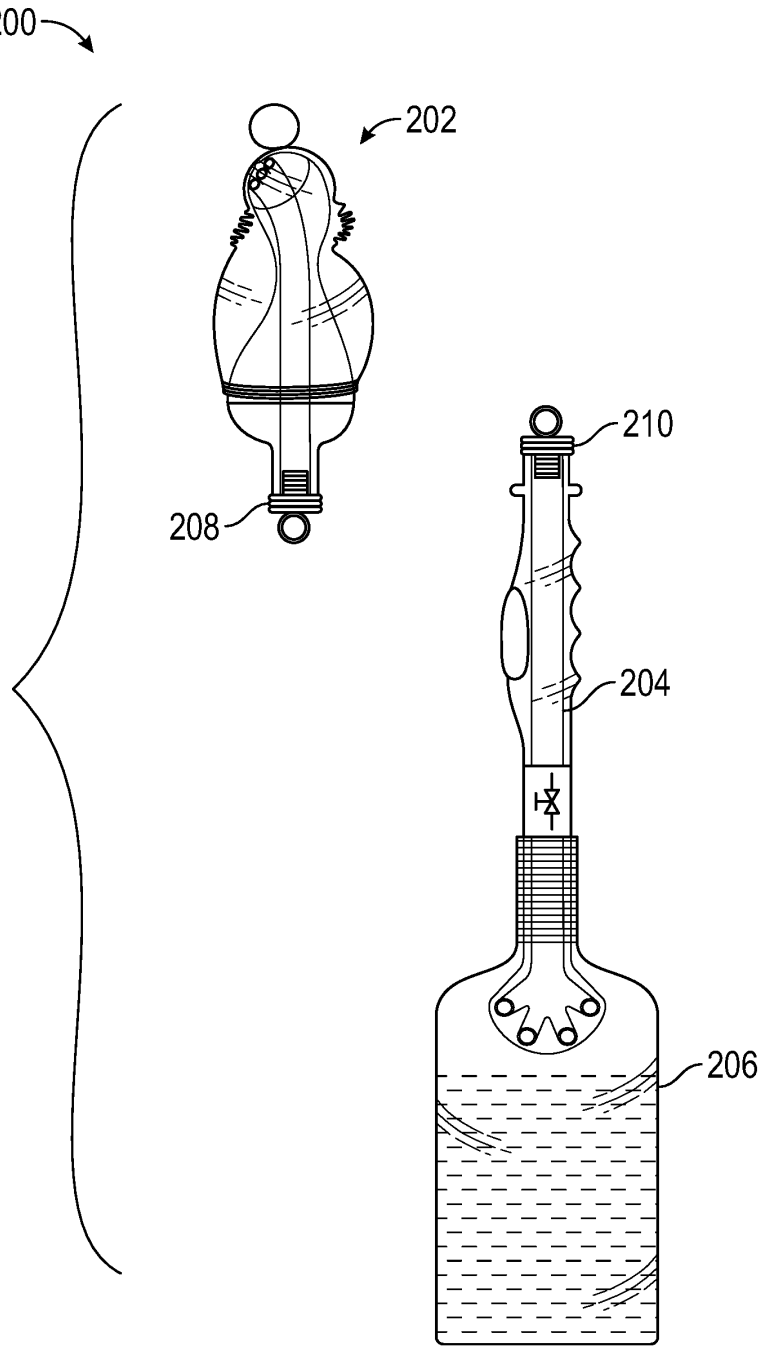

FIG. 2

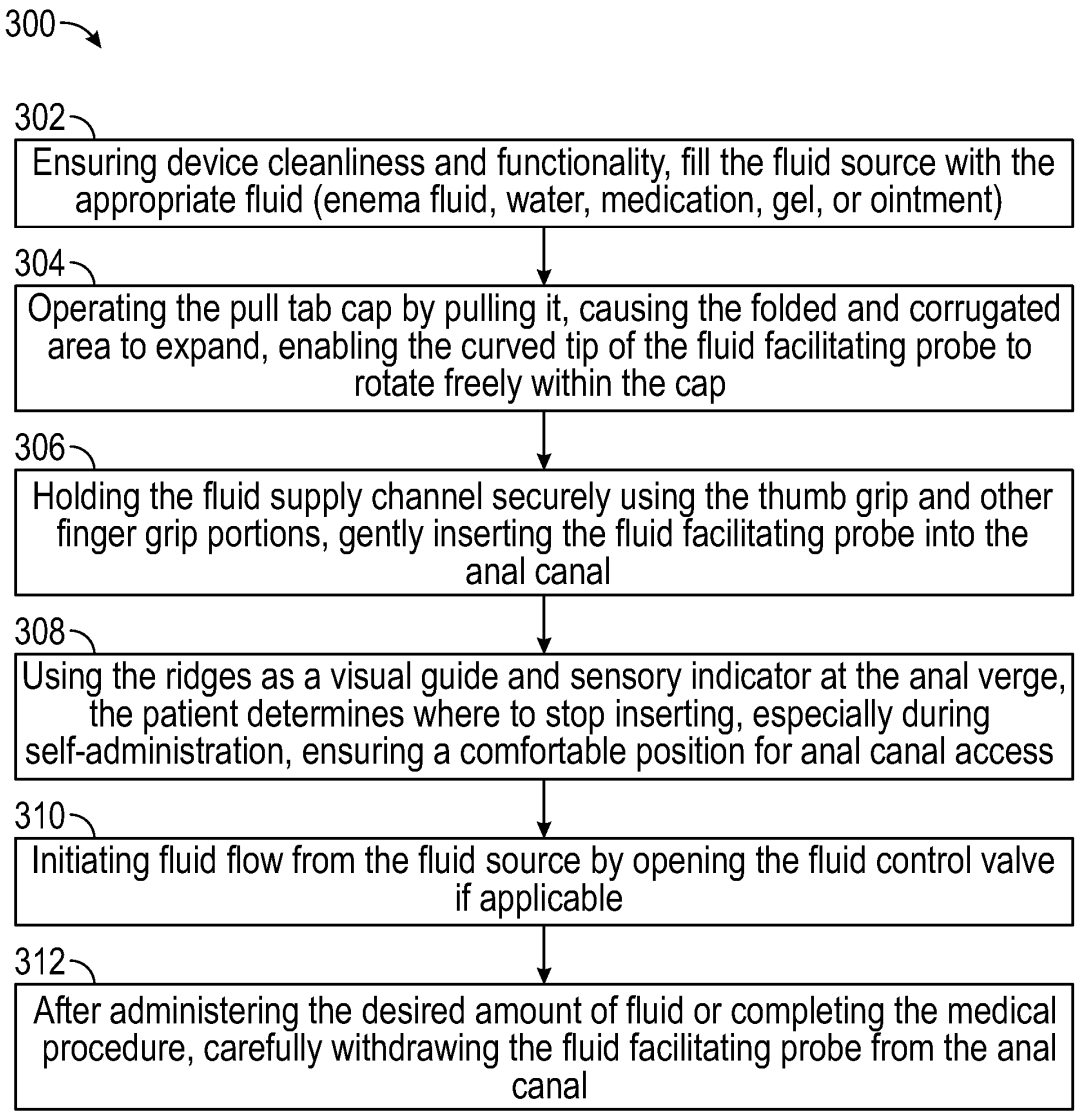
300
302
Ensuring device cleanliness and functionality, fill the fluid source with the appropriate fluid (enema fluid, water, medication, gel, or ointment)
304
Operating the pull tab cap by pulling it, causing the folded and corrugated area to expand, enabling the curved tip of the fluid facilitating probe to rotate freely within the cap
306
Holding the fluid supply channel securely using the thumb grip and other finger grip portions, gently inserting the fluid facilitating probe into the anal canal
308
Using the ridges as a visual guide and sensory indicator at the anal verge, the patient determines where to stop inserting, especially during self-administration, ensuring a comfortable position for anal canal access
310
Initiating fluid flow from the fluid source by opening the fluid control valve if applicable
312
After administering the desired amount of fluid or completing the medical procedure, carefully withdrawing the fluid facilitating probe from the anal canal

FIG. 3