9705036-3

PCT WORLD INTELLECTUAL PROPERTY ORGANIZATION
International Bureau

INTERNATIONAL APPLICATION PUBLISHED UNDER THE PATENT COOPERATION TREATY (PCT)

(51) International Patent Classification 6 : H03G 3/30 — A1

(11) International Publication Number: **WO 96/29780**

(43) International Publication Date: 26 September 1996 (26.09.96)

(21) International Application Number: PCT/IB96/00250

(22) International Filing Date: 21 March 1996 (21.03.96)

(30) Priority Data:
9505946.5 23 March 1995 (23.03.95) GB

(71) Applicant *(for all designated States except US)*: RCA THOMSON LICENSING CORPORATION [US/US]; Two Independence Way, Princeton, NJ 08540 (US).

(72) Inventor; and

(75) Inventor/Applicant *(for US only)*: MEGEID, Magdy [CH/CH]; Wydlerweg 25, CH-8047 Zurich (CH).

(74) Agents: TRIPOLI, Joseph, S. et al.; GE & RCA Licensing Management Operation, Inc., CN 5312, Princeton, NJ 08540 (US).

(81) Designated States: AL, AM, AT, AU, AZ, BB, BG, BR, BY, CA, CH, CN, CZ, DE, DK, EE, ES, FI, GB, GE, HU, IS, JP, KE, KG, KP, KR, KZ, LK, LR, LS, LT, LU, LV, MD, MG, MK, MN, MW, MX, NO, NZ, PL, PT, RO, RU, SD, SE, SG, SI, SK, TJ, TM, TR, TT, UA, UG, US, UZ, VN, ARIPO patent (KE, LS, MW, SD, SZ, UG), Eurasian patent (AM, AZ, BY, KG, KZ, MD, RU, TJ, TM), European patent (AT, BE, CH, DE, DK, ES, FI, FR, GB, GR, IE, IT, LU, MC, NL, PT, SE), OAPI patent (BF, BJ, CF, CG, CI, CM, GA, GN, ML, MR, NE, SN, TD, TG).

Published

With international search report.

Before the expiration of the time limit for amending the claims and to be republished in the event of the receipt of amendments.

(54) Title: DUAL ACTION AUTOMATIC SOUND LEVEL CONTROL

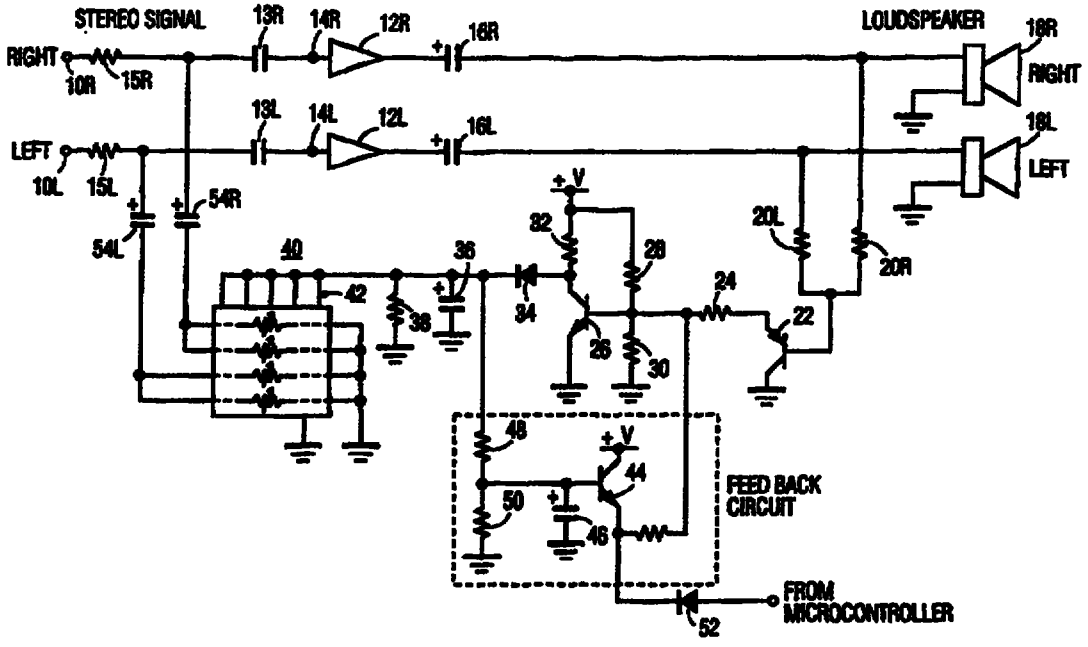

(57) Abstract

A circuit presented automatically controls sound level. Sudden peak signal levels are controlled with a fast time constant of response and the overall sound level is controlled with a slower time constant of response. The feature can be enabled or disabled by the user via a microprocessor responsive to a remote control.