(12) INTERNATIONAL APPLICATION PUBLISHED UNDER THE PATENT COOPERATION TREATY (PCT)

(19) World Intellectual Property Organization
International Bureau

(43) International Publication Date
04 September 2025 (04.09.2025)

WIPO | PCT

(10) International Publication Number
WO 2025/183760 A1

(51) International Patent Classification:
B65D 5/02 (2006.01) *B65D 5/50* (2006.01)

(21) International Application Number:
PCT/US2024/054150

(22) International Filing Date:
01 November 2024 (01.11.2024)

(25) Filing Language: English

(26) Publication Language: English

(30) Priority Data:
63/559,377 29 February 2024 (29.02.2024) US

(71) Applicant: **AMGEN INC.** [US/US]; c/o Amgen Inc., One Amgen Center Drive, Thousand Oaks, CA 91320-1799 (US).

(72) Inventors: **TAN, Kenneth**; c/o Amgen Inc., One Amgen Center Drive, Thousand Oaks, CA 91320-1799 (US). **JONES, Tatika**; c/o Amgen Inc., One Amgen Center Drive, Thousand Oaks, CA 91320-1799 (US). **QUINTANA CONTRERAS, Margarita, Marisol**; c/o Amgen Inc., One Amgen Center Drive, Thousand Oaks, CA 91320-1799 (US). **DIEHNELT, Kay, A.**; c/o Amgen Inc., One Amgen Center Drive, Thousand Oaks, CA 91320-1799 (US). **GREGORIO, Kristine**; c/o Amgen Inc., One Amgen Center Drive, Thousand Oaks, CA 91320-1799 (US).

(74) Agent: **LEE, Eunice**; c/o Amgen Inc., One Amgen Center Drive, Thousand Oaks, CA 91320-1799 (US).

(81) Designated States *(unless otherwise indicated, for every kind of national protection available)*: AE, AG, AL, AM, AO, AT, AU, AZ, BA, BB, BG, BH, BN, BR, BW, BY, BZ, CA, CH, CL, CN, CO, CR, CU, CV, CZ, DE, DJ, DK, DM, DO, DZ, EC, EE, EG, ES, FI, GB, GD, GE, GH, GM, GT, HN, HR, HU, ID, IL, IN, IQ, IR, IS, IT, JM, JO, JP, KE, KG, KH, KN, KP, KR, KW, KZ, LA, LC, LK, LR, LS, LU, LY, MA, MD, MG, MK, MN, MU, MW, MX, MY, MZ, NA, NG, NI, NO, NZ, OM, PA, PE, PG, PH, PL, PT, QA, RO, RS, RU, RW, SA, SC, SD, SE, SG, SK, SL, ST, SV, SY, TH,

(54) Title: SUSTAINABLE AND MODULAR PACKAGING SYSTEMS FOR CONTAINERS FOR PHARMACEUTICAL USE

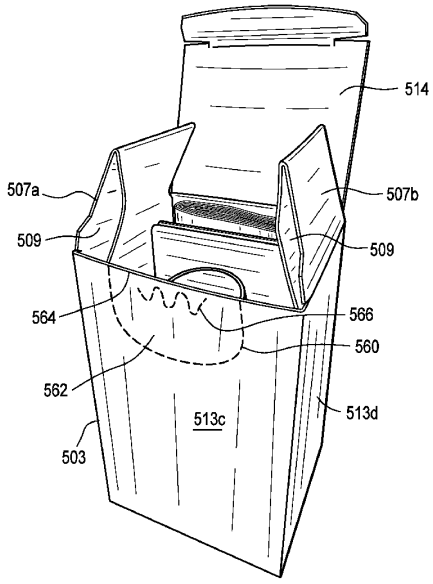

FIG. 13A

(57) Abstract: Systems for packaging container(s) is disclosed. The system comprises a carton having a storage configuration where the carton is substantially flat and an assembled configuration. The carton comprises a bottom box, a lid coupled to the bottom box, a first flap extending from the first sidewall of the bottom box, and a second flap extending from the second sidewall of the bottom box. The first and second flaps define a set of cavities. The system also comprises an insert configured to be disposed within the bottom box of the carton. The insert has a storage configuration where the insert is substantially flat and an assembled configuration. The insert defines at least one cavity dimensioned to house at least one container.

WO 2025/183760 A1

[Continued on next page]

TJ, TM, TN, TR, TT, TZ, UA, UG, US, UZ, VC, VN, WS, ZA, ZM, ZW.

(84) **Designated States** *(unless otherwise indicated, for every kind of regional protection available)*: ARIPO (BW, CV, GH, GM, KE, LR, LS, MW, MZ, NA, RW, SC, SD, SL, ST, SZ, TZ, UG, ZM, ZW), Eurasian (AM, AZ, BY, KG, KZ, RU, TJ, TM), European (AL, AT, BE, BG, CH, CY, CZ, DE, DK, EE, ES, FI, FR, GB, GR, HR, HU, IE, IS, IT, LT, LU, LV, MC, ME, MK, MT, NL, NO, PL, PT, RO, RS, SE, SI, SK, SM, TR), OAPI (BF, BJ, CF, CG, CI, CM, GA, GN, GQ, GW, KM, ML, MR, NE, SN, TD, TG).

Declarations under Rule 4.17:

— *as to applicant's entitlement to apply for and be granted a patent (Rule 4.17(ii))*

— *as to the applicant's entitlement to claim the priority of the earlier application (Rule 4.17(iii))*

Published:

— *with international search report (Art. 21(3))*