FIG 1

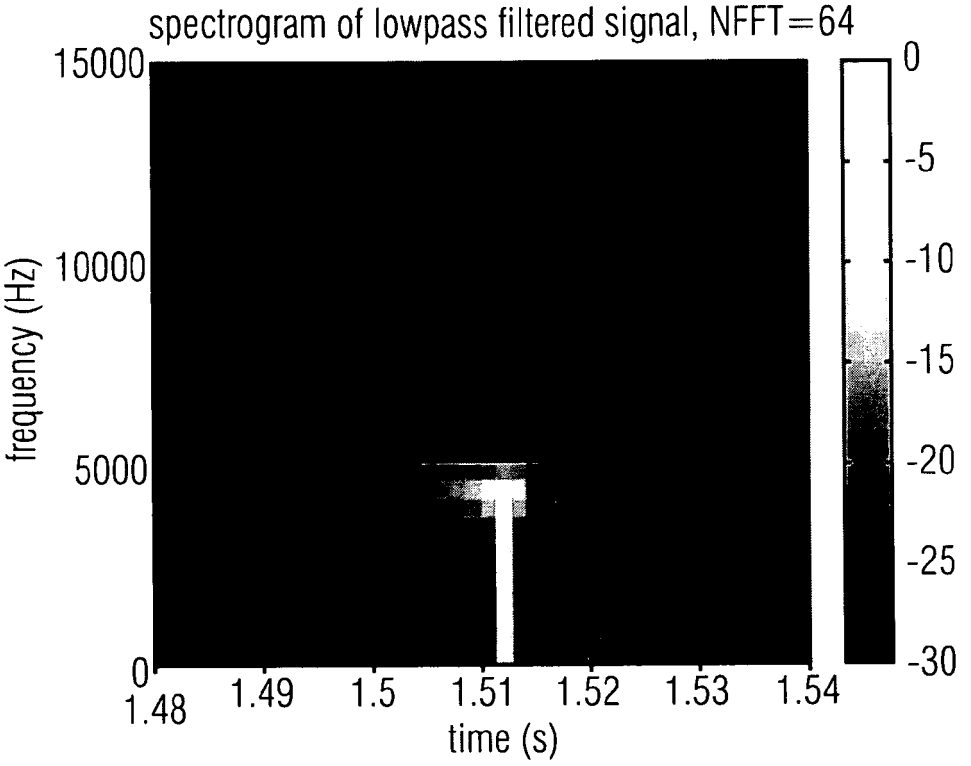
spectrogram of lowpass filtered signal, NFFT=64
15000
10000
5000
0
frequency (Hz)
1.48
1.49
1.5
1.51
1.52
1.53
1.54
time (s)
0
-5
-10
-15
-20
-25
-30

FIG 2

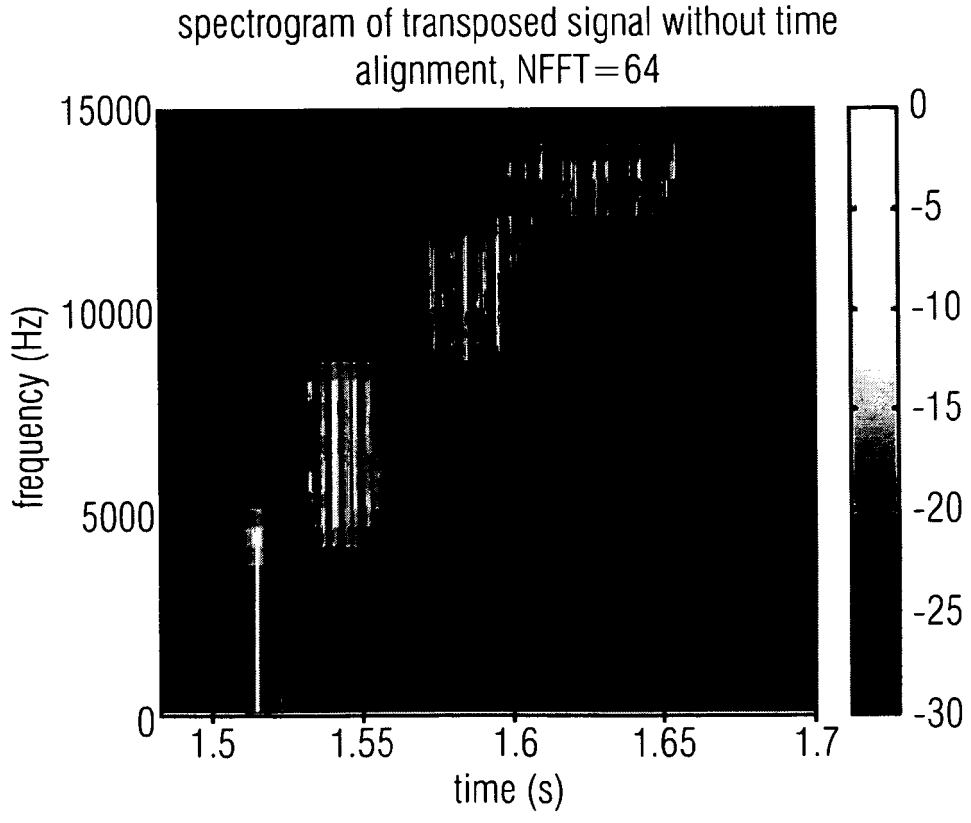
spectrogram of transposed signal without time alignment, NFFT=64
15000
10000
5000
0
frequency (Hz)
1.5
1.55
1.6
1.65
1.7
time (s)
0
-5
-10
-15
-20
-25
-30

FIG 3

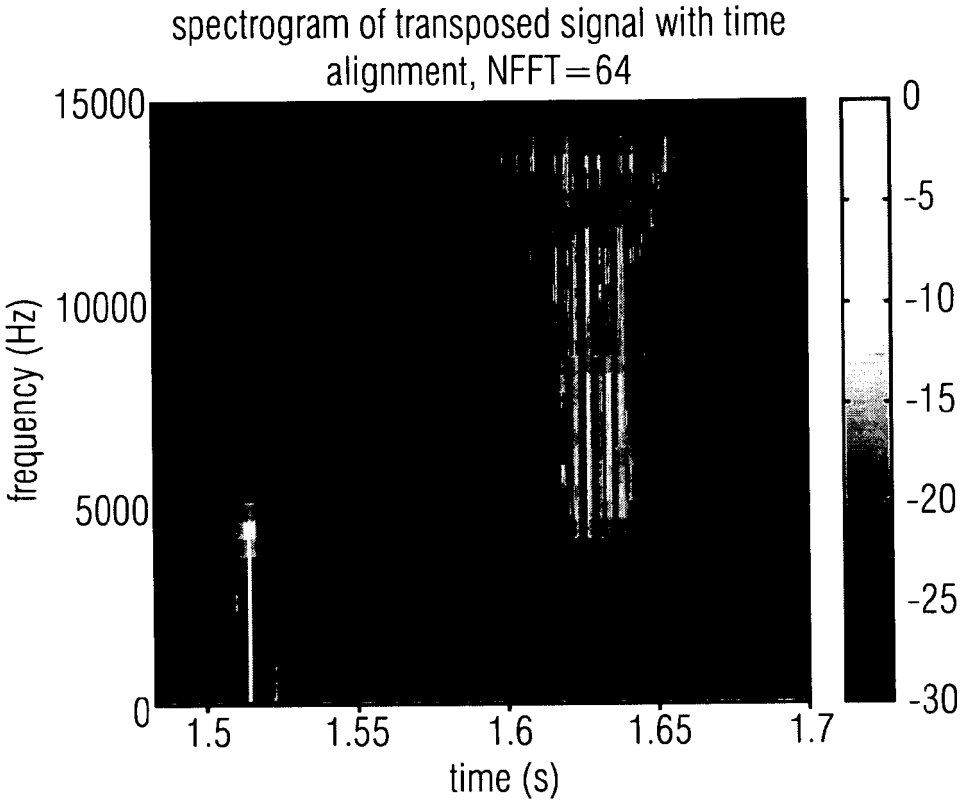
spectrogram of transposed signal with time alignment, NFFT=64
15000
10000
5000
0
frequency (Hz)
1.5
1.55
1.6
1.65
1.7
time (s)
0
-5
-10
-15
-20
-25
-30

FIG 4

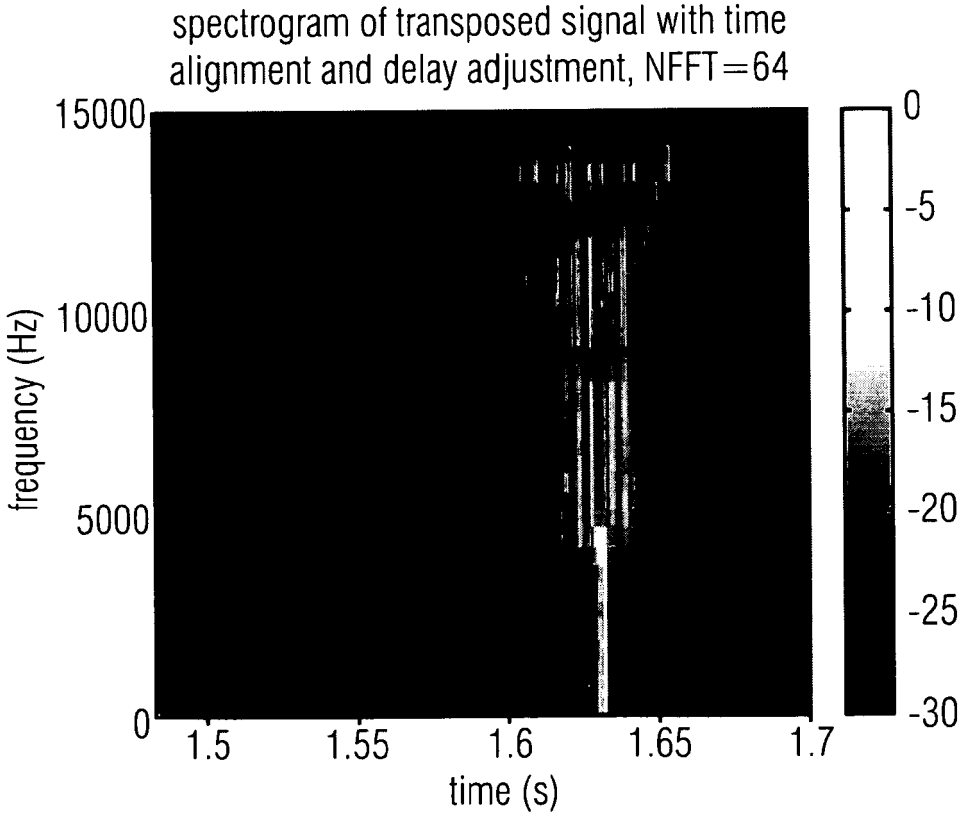
spectrogram of transposed signal with time alignment and delay adjustment, NFFT=64
15000
10000
5000
0
frequency (Hz)
1.5
1.55
1.6
1.65
1.7
time (s)
0
-5
-10
-15
-20
-25
-30

FIG 5

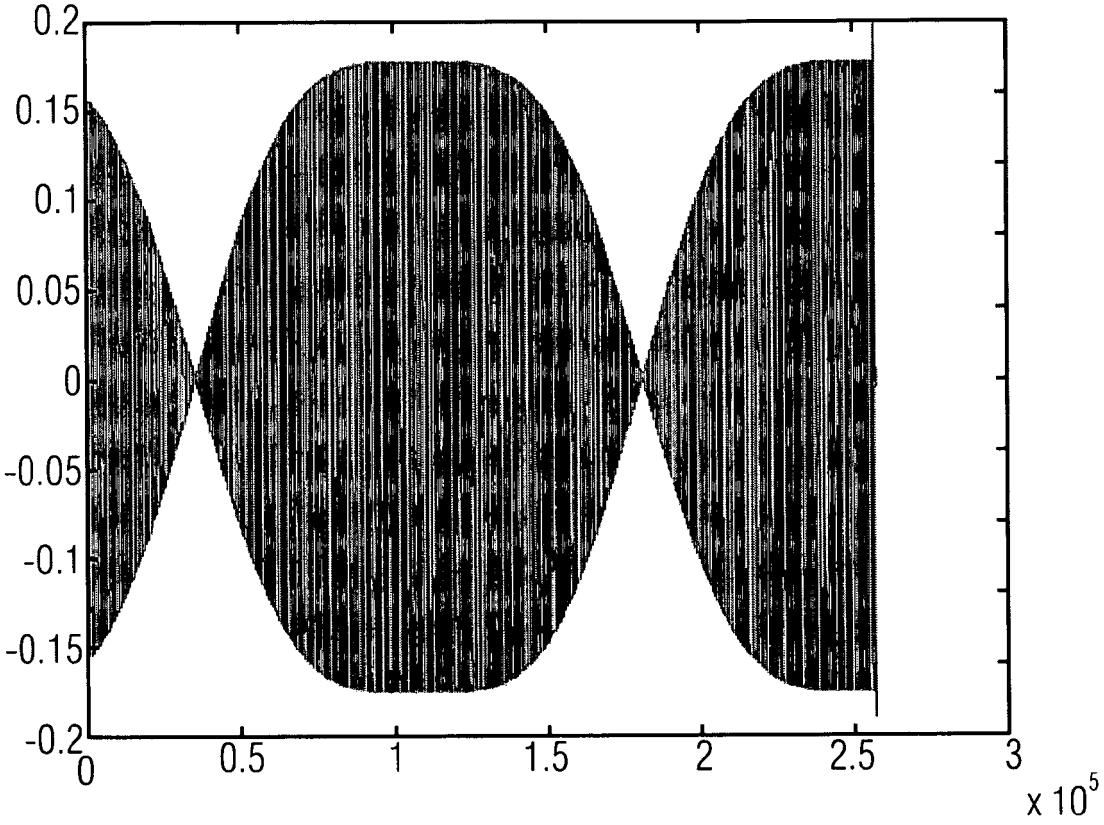
0.2
0.15
0.1
0.05
0
-0.05
-0.1
-0.15
-0.2
0
0.5
1
1.5
2
2.5
3
x 10^5

FIG 6

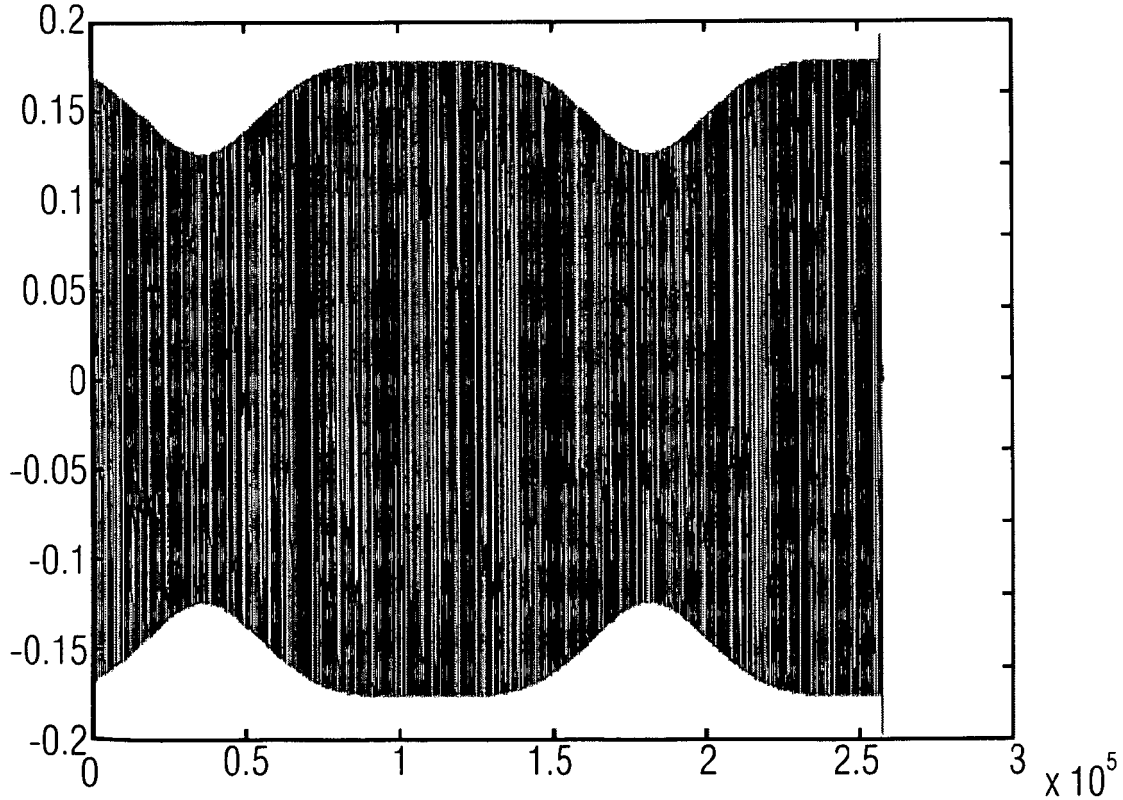
0.2
0.15
0.1
0.05
0
-0.05
-0.1
-0.15
-0.2
0
0.5
1
1.5
2
2.5
3
x 10^5

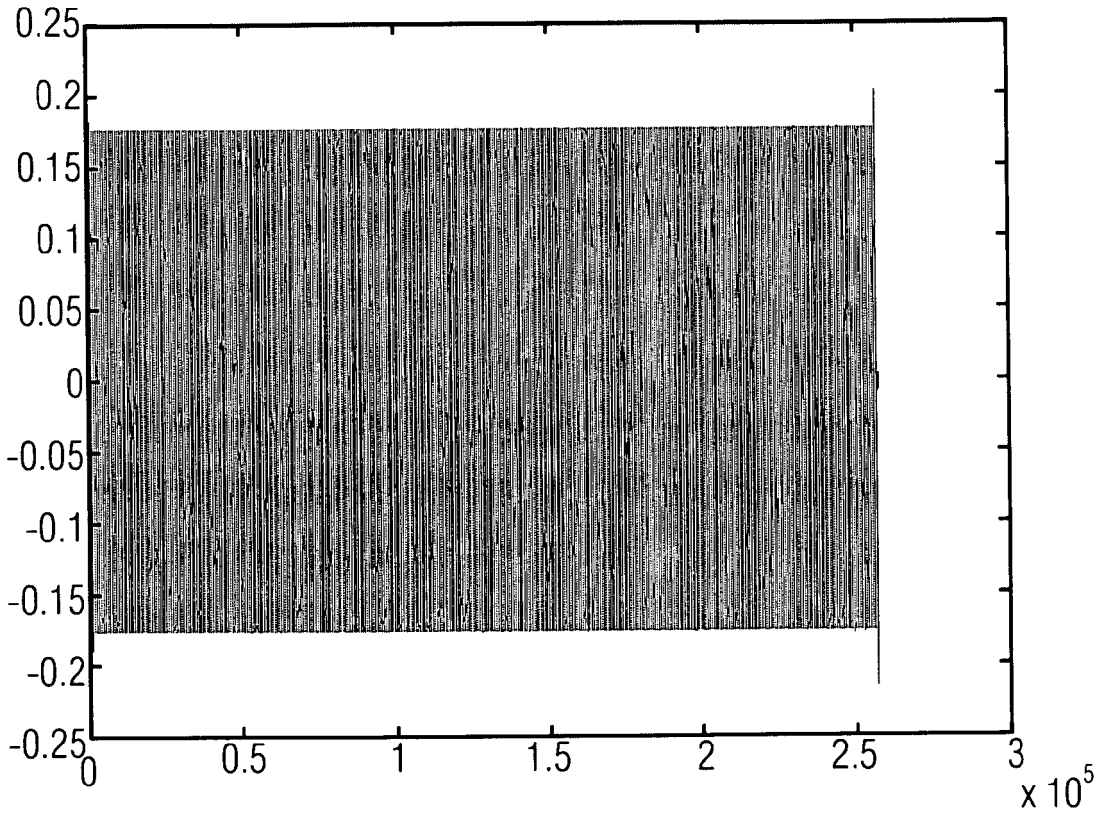

FIG 7

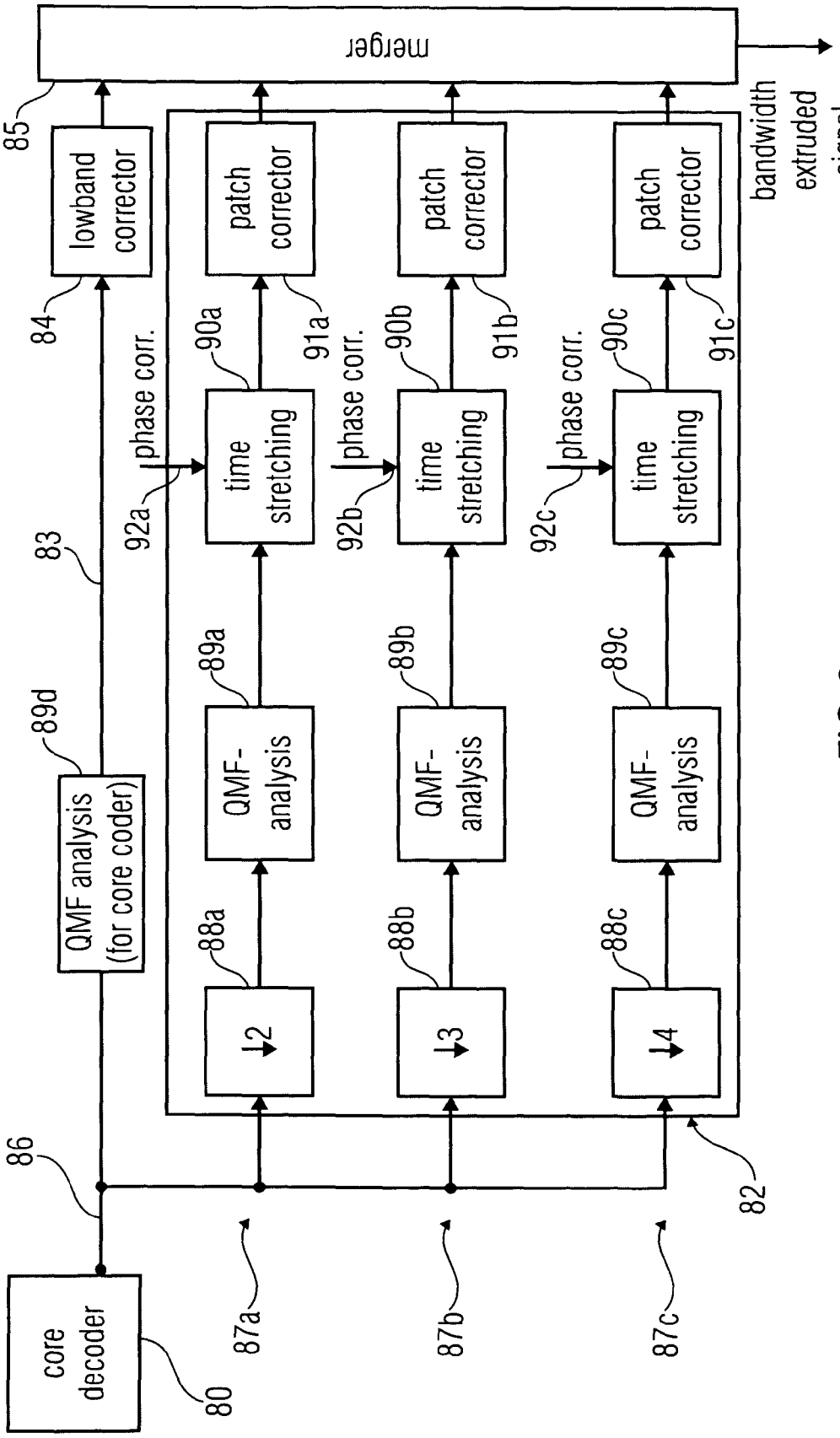
core decoder
80
QMF analysis (for core coder)
89d
lowband corrector
84
merger
85
bandwidth extruded signal
86
83
82
87a
87b
87c
88a
88b
88c
↓2
↓3
↓4
QMF-analysis
89a
89b
89c
phase corr.
92a
92b
92c
time stretching
90a
90b
90c
patch corrector
91a
91b
91c

FIG 8

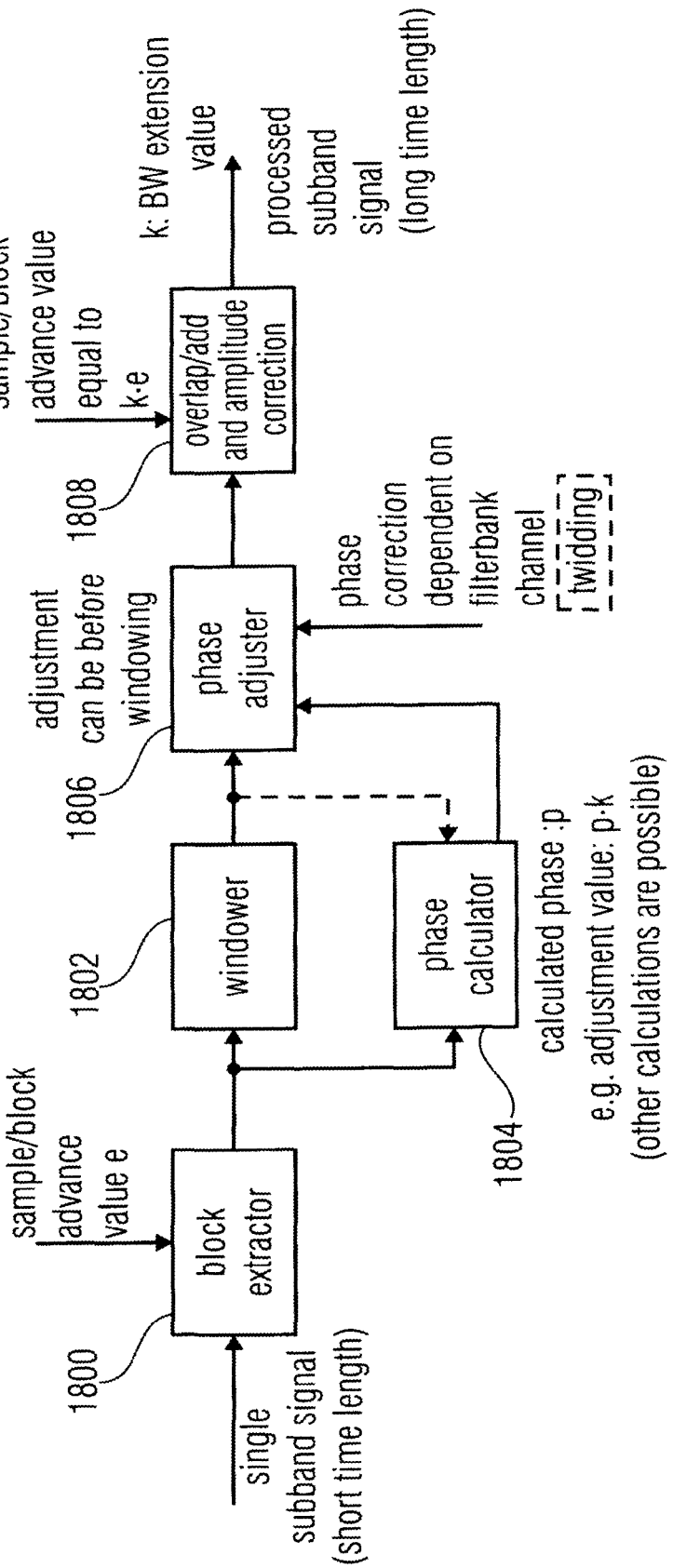
single subband signal (short time length)
1800
block extractor
sample/block advance value e
1802
windower
1804
phase calculator
calculated phase :p
e.g. adjustment value: p·k
(other calculations are possible)
1806
phase adjuster
adjustment can be before windowing
phase correction dependent on filterbank channel
twidding
1808
overlap/add and amplitude correction
sample/block advance value equal to k·e
k: BW extension value
processed subband signal (long time length)

FIG 9

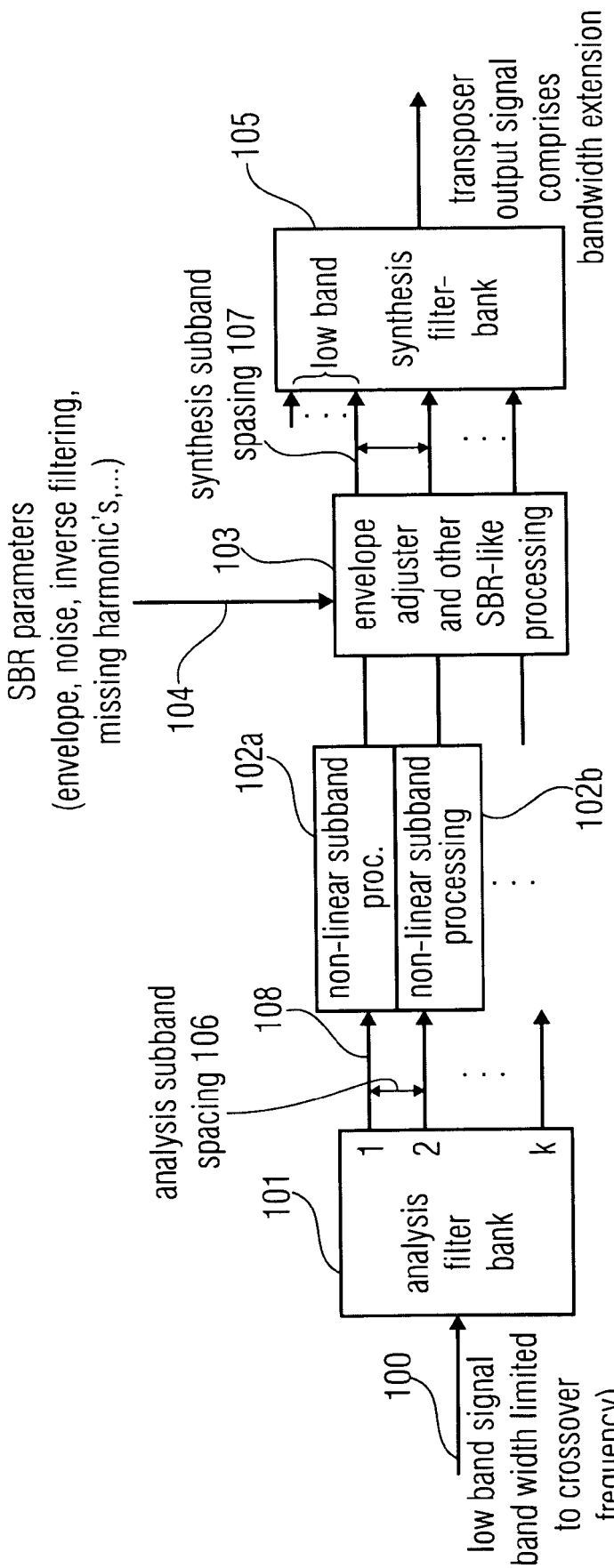
low band signal
(band width limited
to crossover
frequency)
100
analysis
filter
bank
101
1
2
k
analysis subband
spacing 106
108
non-linear subband
proc.
non-linear subband
processing
102a
102b
SBR parameters
(envelope, noise, inverse filtering,
missing harmonic's,...)
104
103
envelope
adjuster
and other
SBR-like
processing
synthesis subband
spasing 107
low band
synthesis
filter-
bank
105
transposer
output signal
comprises
bandwidth extension
by 2,3,4
(not bandwidth
limited to
crossover
frequency)

FIG 10

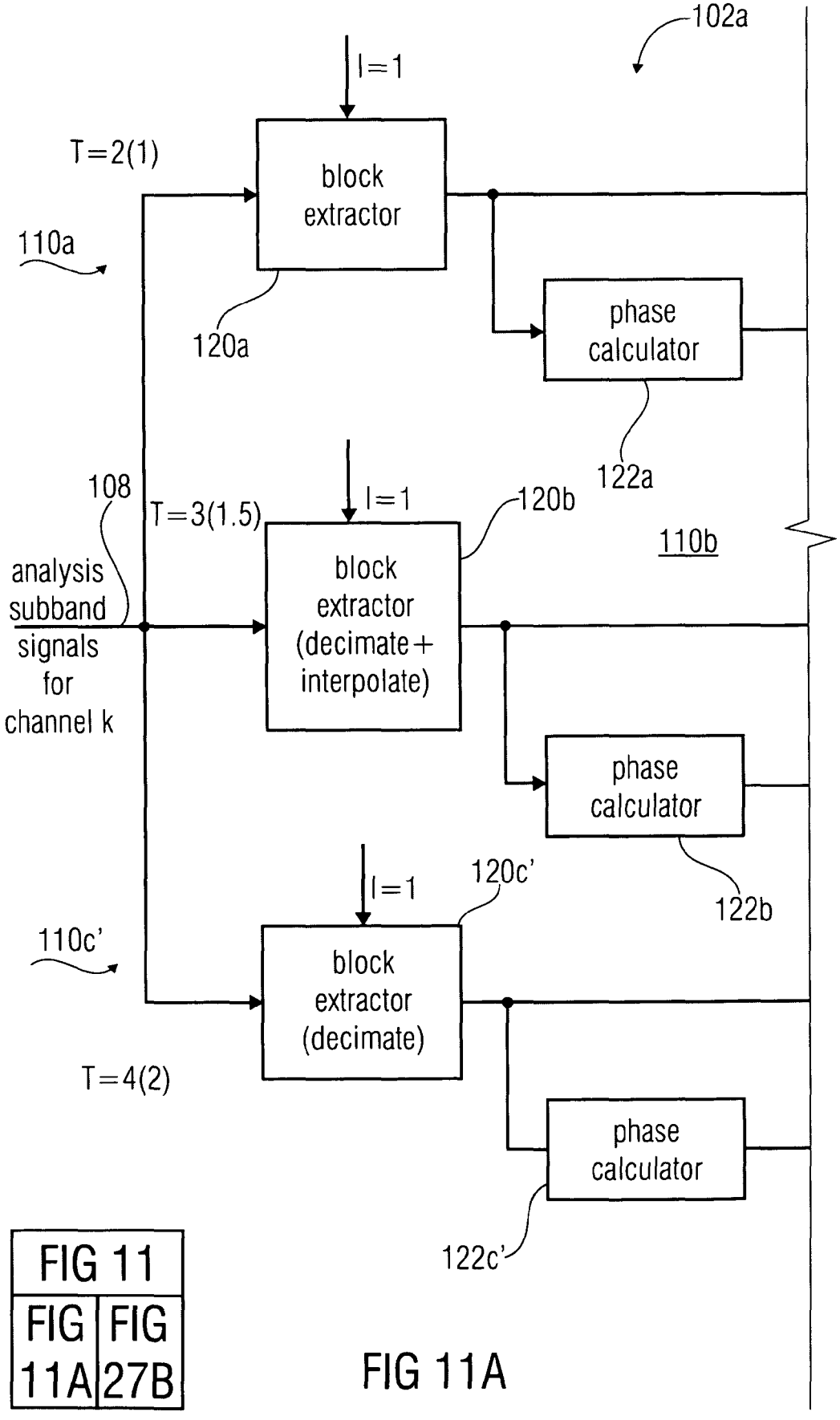

FIG 11

FIG 11A | FIG 27B

FIG 11A

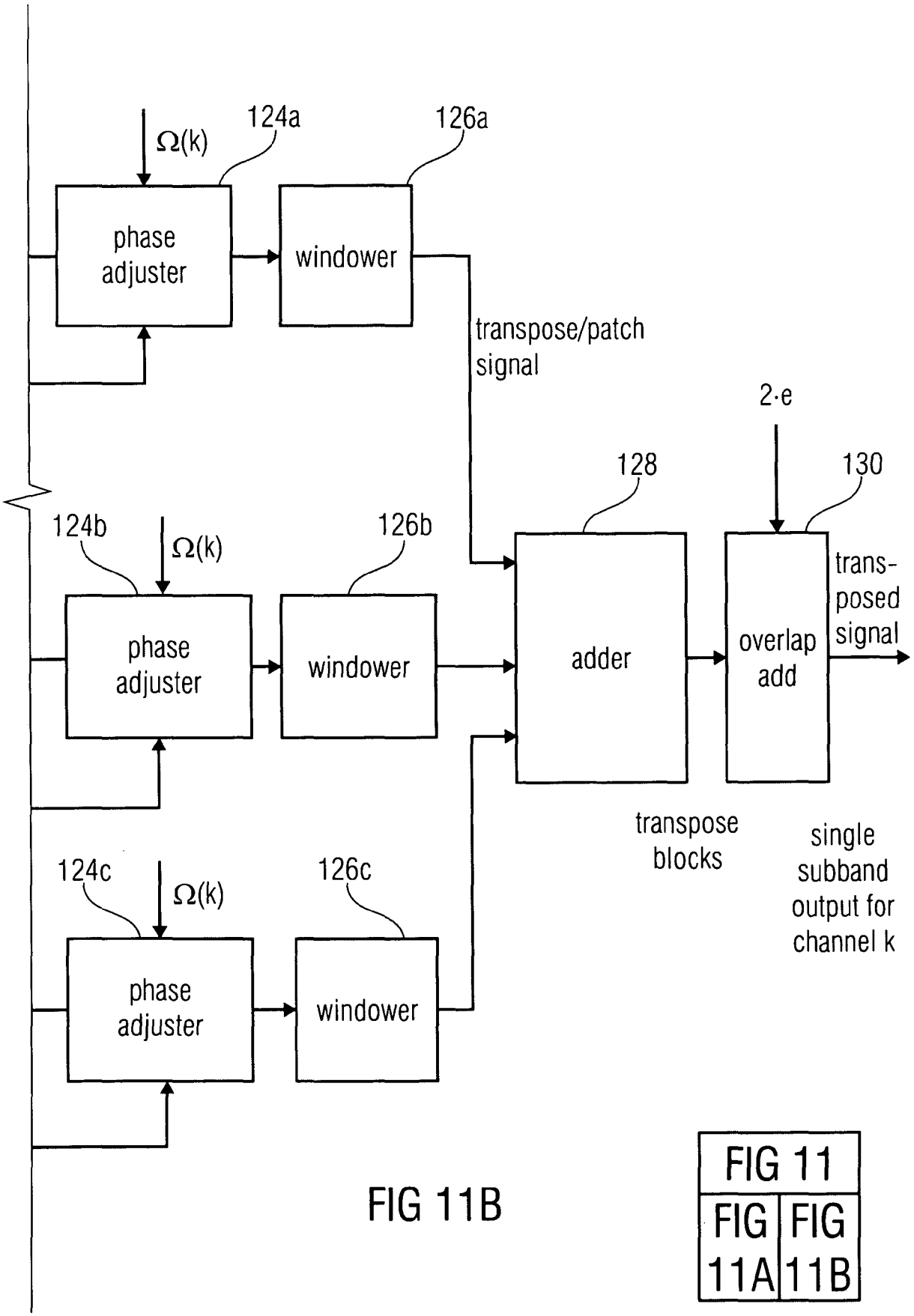

FIG 11B

FIG 11

FIG 11A	FIG 11B

phase corrections for avoiding amplitude variations

- symmetric situation of analysis/ synthesis filterbank pair:

151 $\Delta\Theta_n = \frac{\pi}{2}(T\text{-}1)(n+\frac{1}{2})$; T: transposition factor, n: filterbank channel

151a 151b

- asymmetric distribution of phase twiddles:

$\Delta\Theta_n = (1\text{-}T)(\Theta_n\text{-}\Psi_n)$; Ψ_n: phase twiddles

e.g. a 64 band QMF filterbank pair

152 $\Delta\Theta_n = \frac{385}{128}\pi(T\text{-}1)(n+\frac{1}{2})$;

152a 152b

(depends on channel and transpos. factor)

- specific application of phase twiddles:

153 $\Delta\Theta_n = -\frac{385}{128}\pi(n+\frac{1}{2})$;

(depends on channel only)

→ analysis filterbank adds a phase of

$\frac{385}{128}\pi(n+\frac{1}{2})$; compared to above case

FIG 12

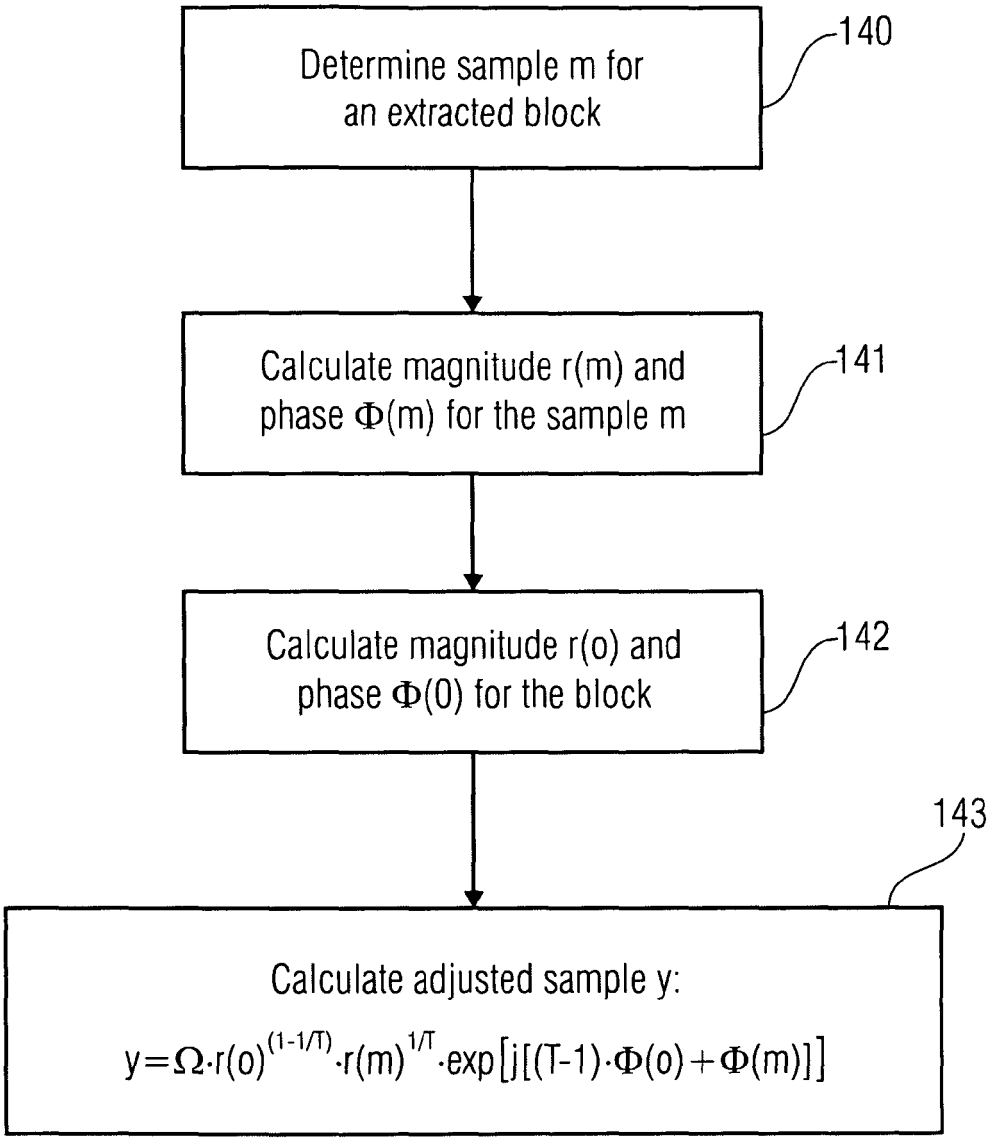

Ω: filterbank-channel dependent phase correction
(T-1)·Φ(o): signal-dependent phase term
Φ(m): phase of the current sample
T: transposition factor

FIG 13

synthSize: number of channels of synthesis bank

k: subband index
l: sample index

```
L=2*synthSize;
for (k=0; k<L; k++) {
    for (l=0; l<2*L; l++) {
        MM.real[k][l]=cos(PI/(2*L)*(k+0.5)*(2*l-2*L));
        MM.imag[k][l]=sin(PI/(2*L)*(k+0.5)*(2*l-2*L));
    }
}
```

phase correction independent on transposition factor

FIG 14A

analysis filterbank modulation matching with complex SBR filterbank in ISO/IEC 14496-3, section 4.6.18.4.2

ks: index of a starting channel

```
L=2*synthSize;
for (k=0; k<L; k++) {
    for (l=0; l<2*L; l++) {
        MM.real[k][l]=cos(PI/(2*L)*((k+0.5)*(2*l-L/64.0)-L/32.0*ks));
        MM.imag[k][l]=sin(PI/(2*L)*((k+0.5)*(2*l-L/64.0)-L/32.0*ks));
    }
}
```

transposition factor dependent phase correction

FIG 14B