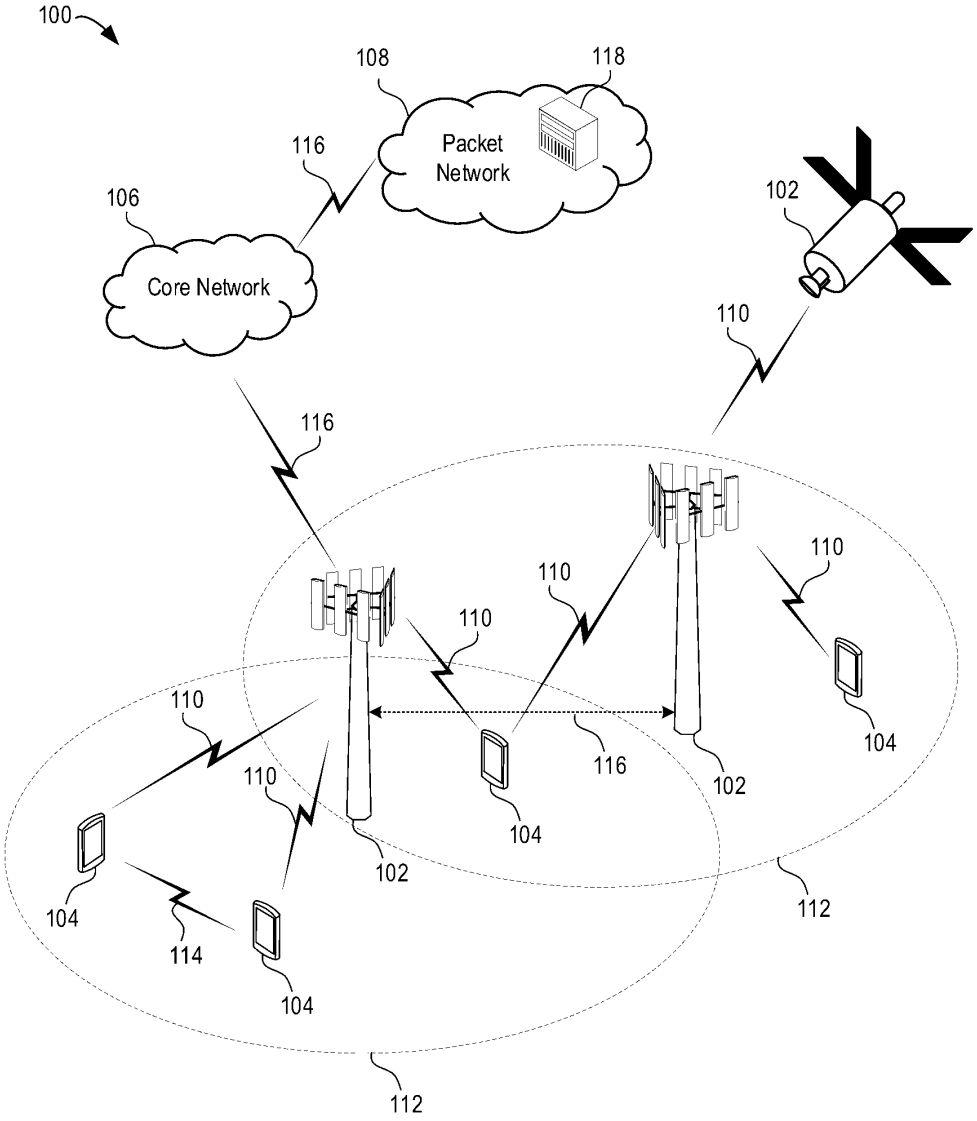
100
108
118
Packet Network
116
106
Core Network
102
110
116
110
110
110
110
116
102
104
110
110
102
104
104
114
104
112
112

FIG. 1

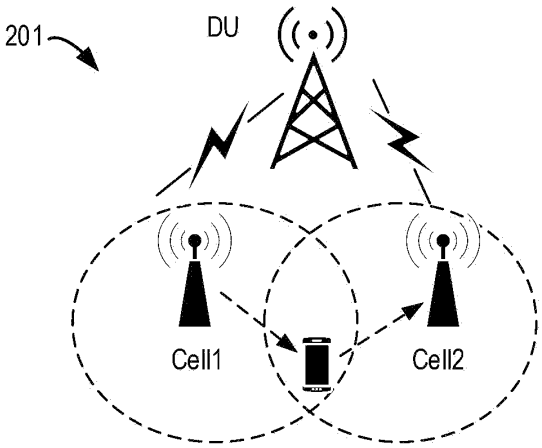

FIG. 2A

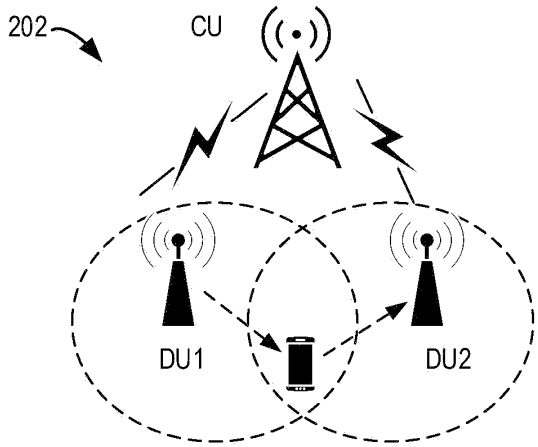

FIG. 2B

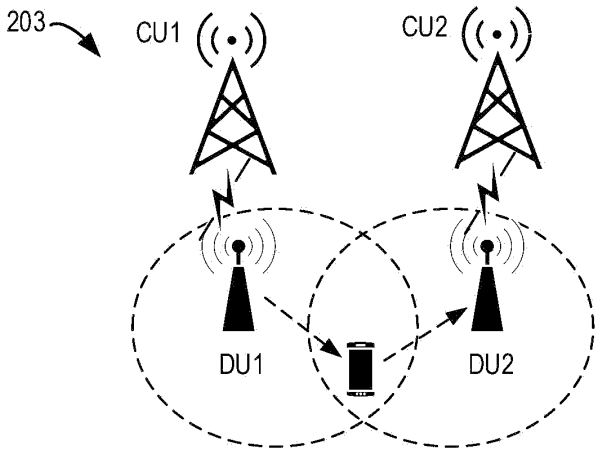
203
CU1
CU2
DU1
DU2

FIG. 2C

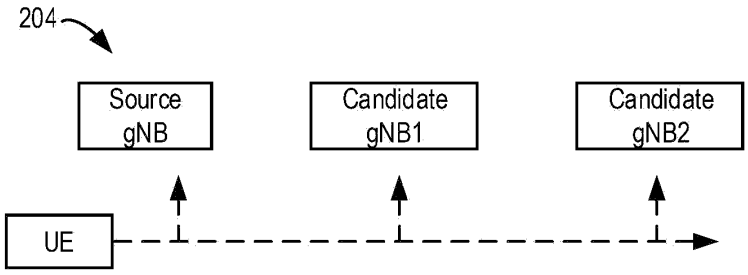
204
Source gNB
Candidate gNB1
Candidate gNB2
UE

FIG. 2D

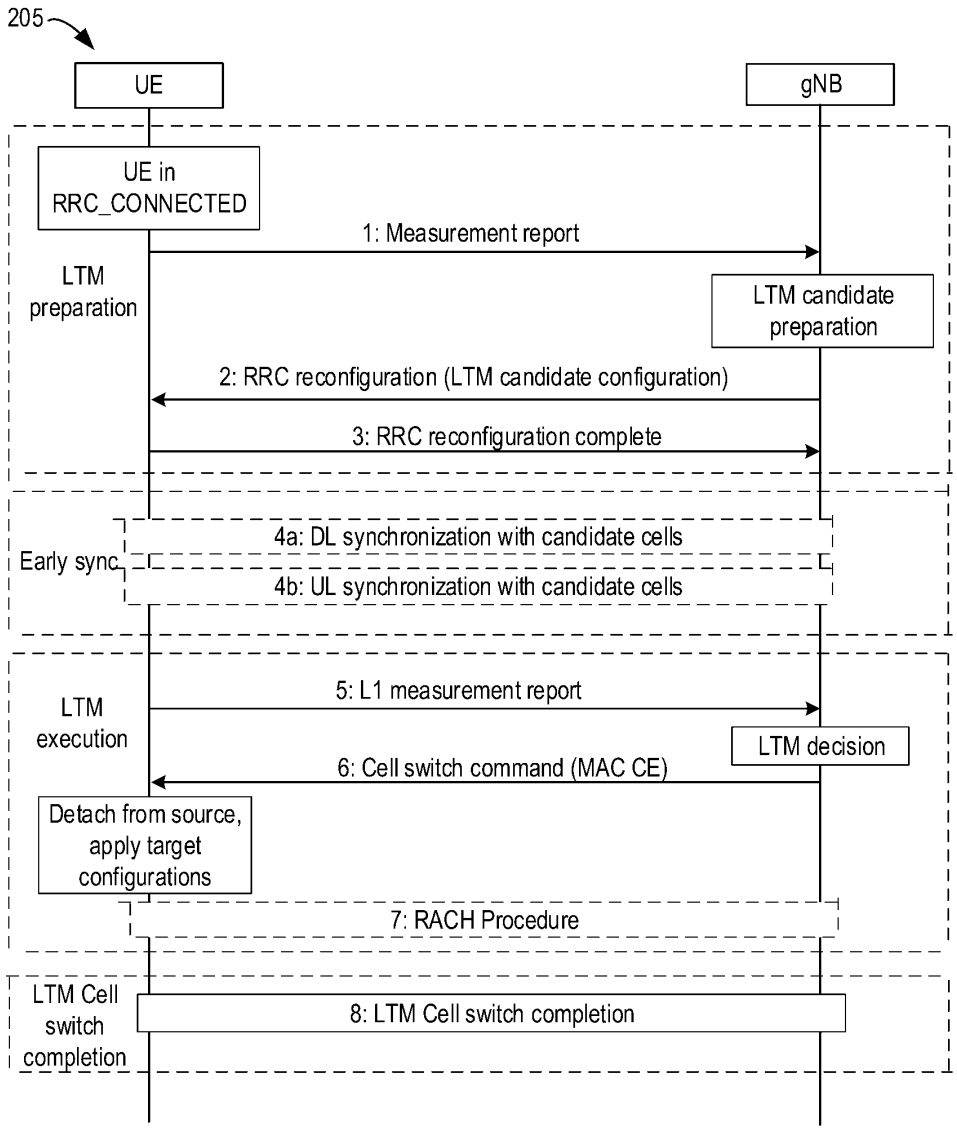
205
UE
gNB
UE in RRC_CONNECTED
1: Measurement report
LTM preparation
LTM candidate preparation
2: RRC reconfiguration (LTM candidate configuration)
3: RRC reconfiguration complete
Early sync
4a: DL synchronization with candidate cells
4b: UL synchronization with candidate cells
LTM execution
5: L1 measurement report
LTM decision
6: Cell switch command (MAC CE)
Detach from source, apply target configurations
7: RACH Procedure
LTM Cell switch completion
8: LTM Cell switch completion

FIG. 2E

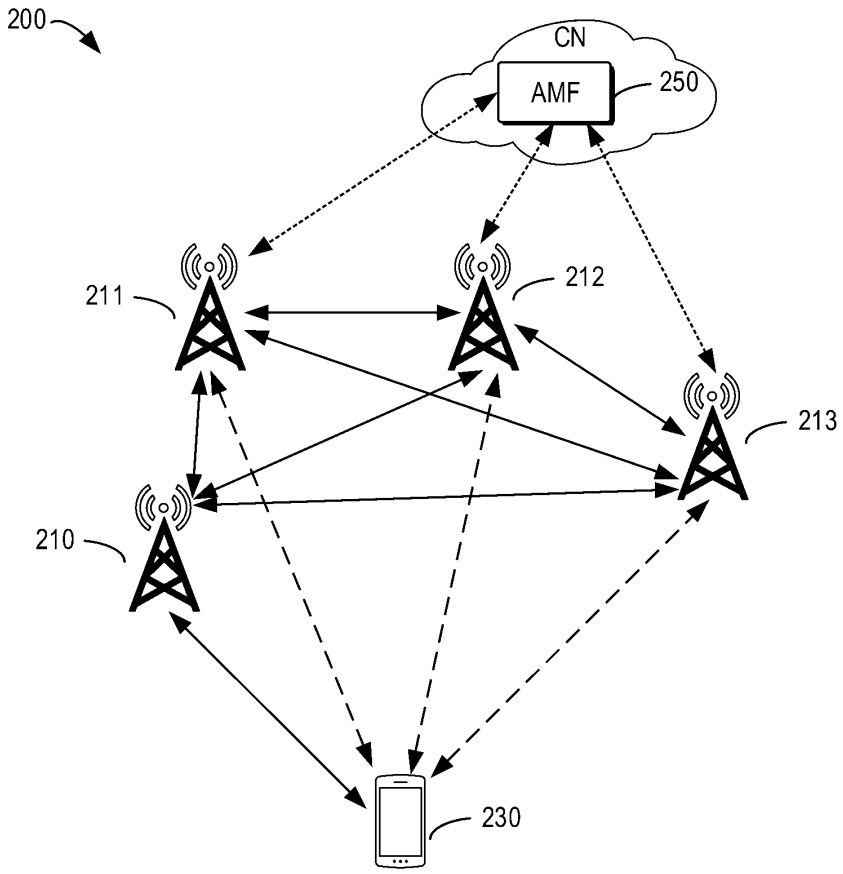

FIG. 2F

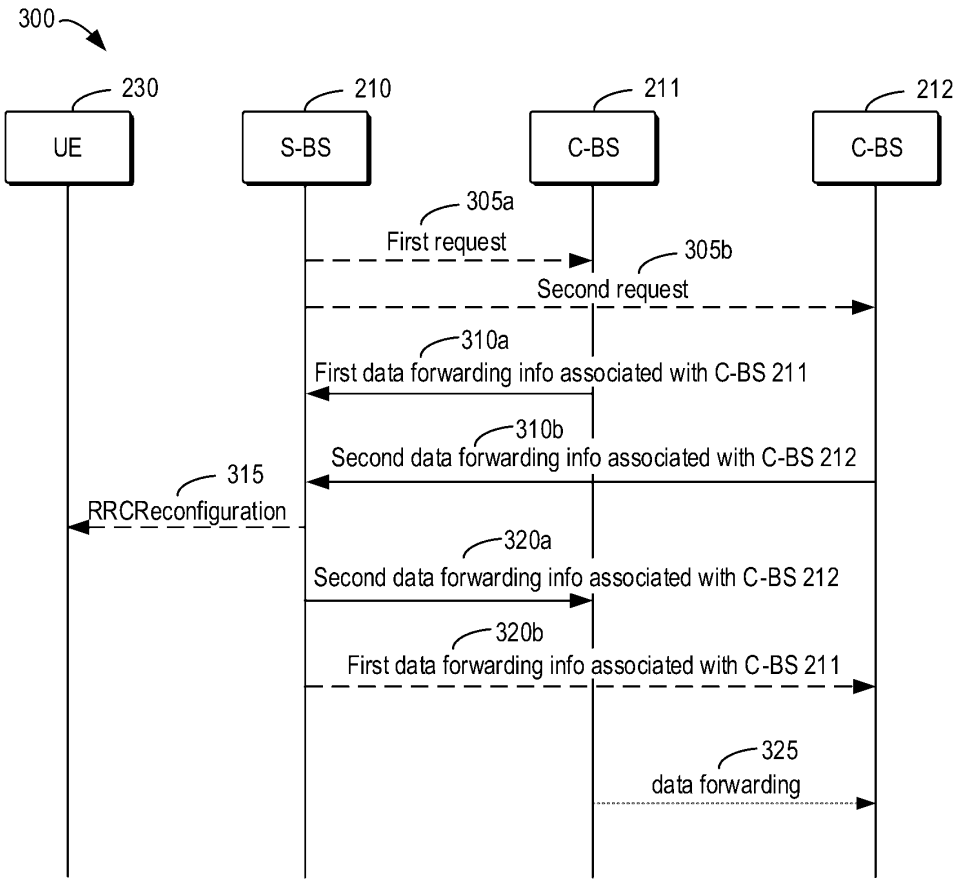
300
230
UE
210
S-BS
211
C-BS
212
C-BS
305a
First request
305b
Second request
310a
First data forwarding info associated with C-BS 211
310b
Second data forwarding info associated with C-BS 212
315
RRCReconfiguration
320a
Second data forwarding info associated with C-BS 212
320b
First data forwarding info associated with C-BS 211
325
data forwarding

FIG. 3

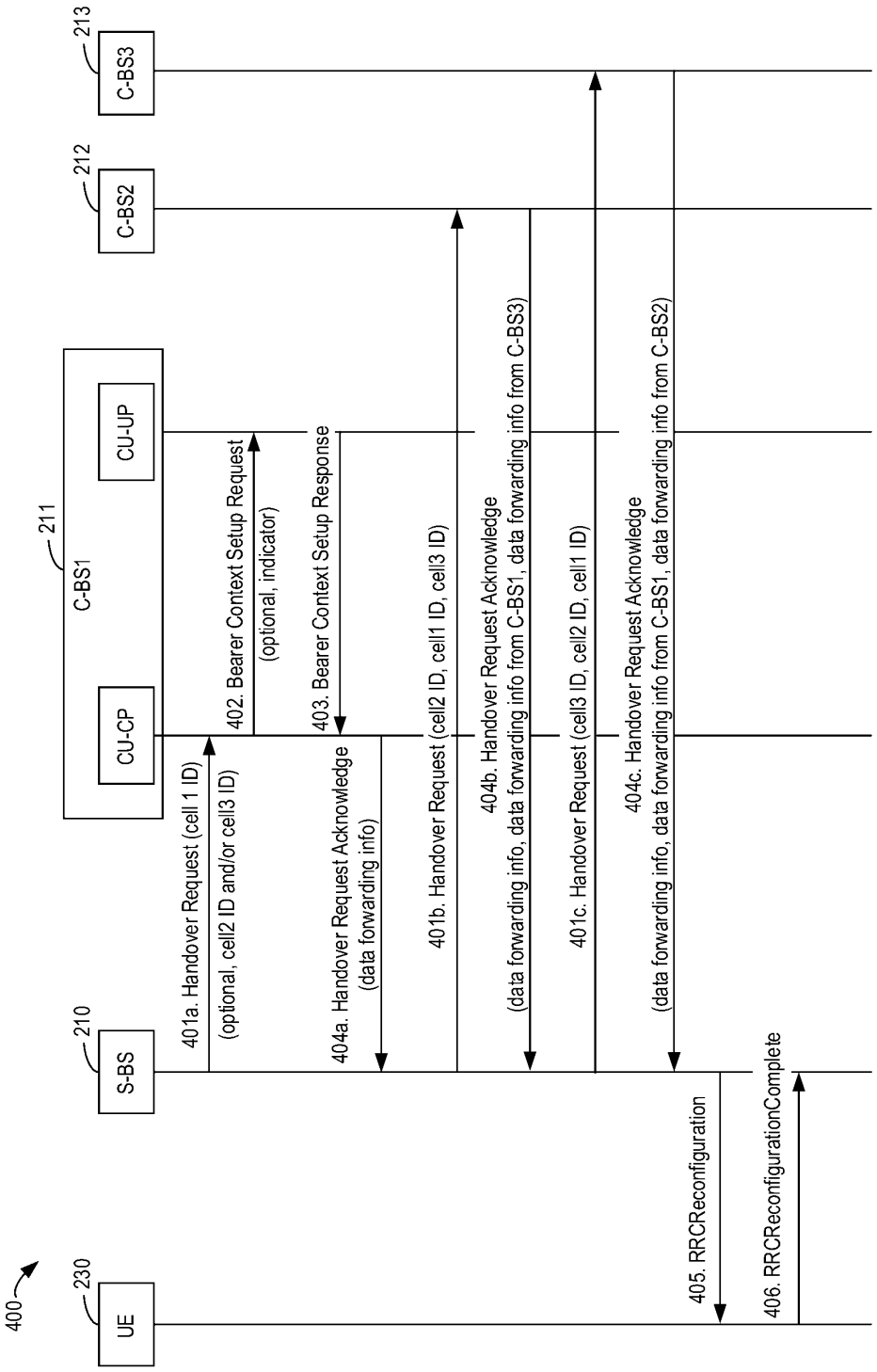
400
UE
230
S-BS
210
C-BS1
211
CU-CP
CU-UP
C-BS2
212
C-BS3
213
401a. Handover Request (cell 1 ID)
(optional, cell2 ID and/or cell3 ID)
402. Bearer Context Setup Request
(optional, indicator)
403. Bearer Context Setup Response
404a. Handover Request Acknowledge
(data forwarding info)
401b. Handover Request (cell2 ID, cell1 ID, cell3 ID)
404b. Handover Request Acknowledge
(data forwarding info, data forwarding info from C-BS1, data forwarding info from C-BS3)
401c. Handover Request (cell3 ID, cell2 ID, cell1 ID)
404c. Handover Request Acknowledge
(data forwarding info, data forwarding info from C-BS1, data forwarding info from C-BS2)
405. RRCReconfiguration
406. RRCReconfigurationComplete

FIG. 4A

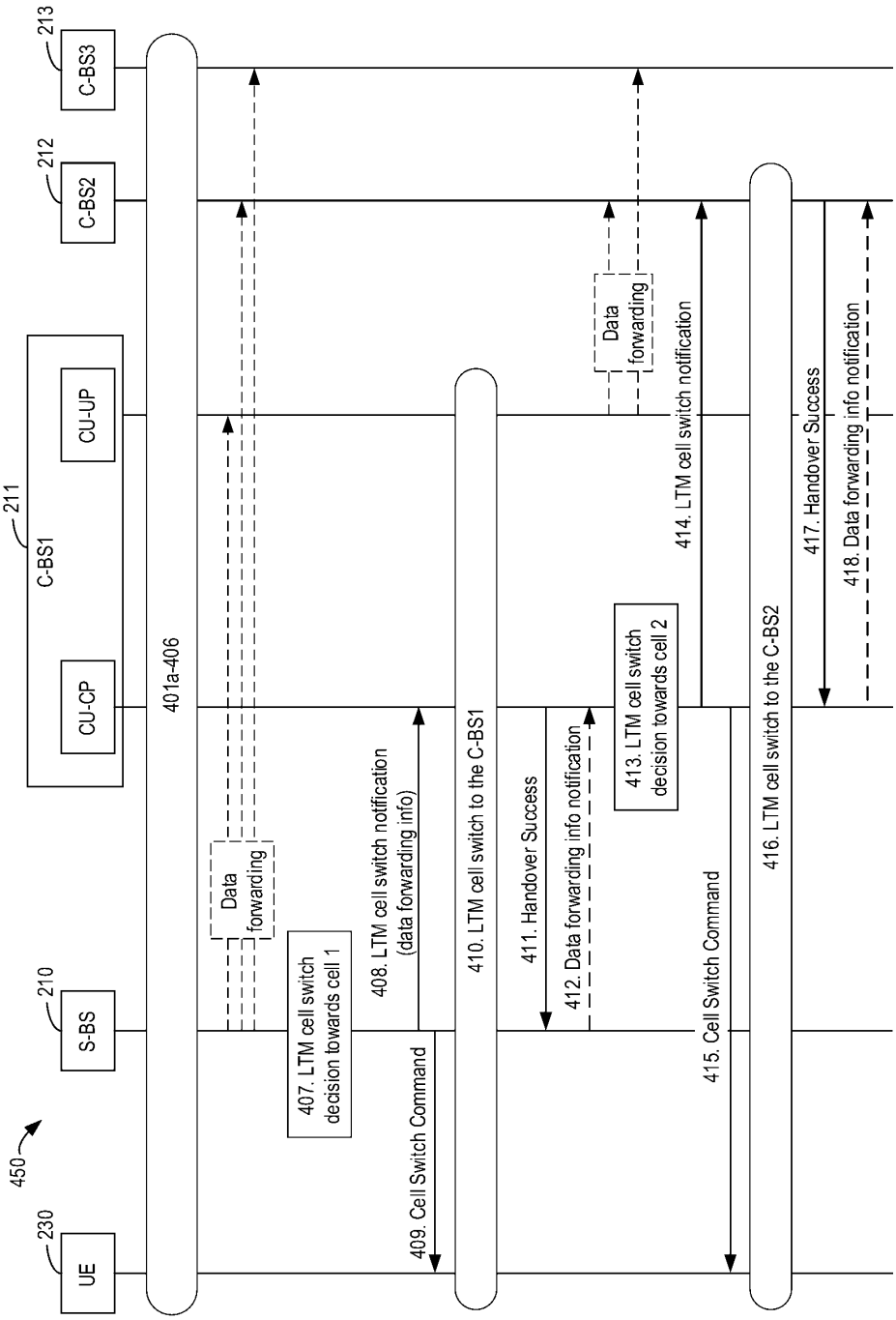
450
UE
230
S-BS
210
C-BS1
211
CU-CP
CU-UP
C-BS2
212
C-BS3
213
401a-406
Data forwarding
407. LTM cell switch decision towards cell 1
408. LTM cell switch notification (data forwarding info)
409. Cell Switch Command
410. LTM cell switch to the C-BS1
411. Handover Success
412. Data forwarding info notification
Data forwarding
413. LTM cell switch decision towards cell 2
414. LTM cell switch notification
415. Cell Switch Command
416. LTM cell switch to the C-BS2
417. Handover Success
418. Data forwarding info notification

FIG. 4B

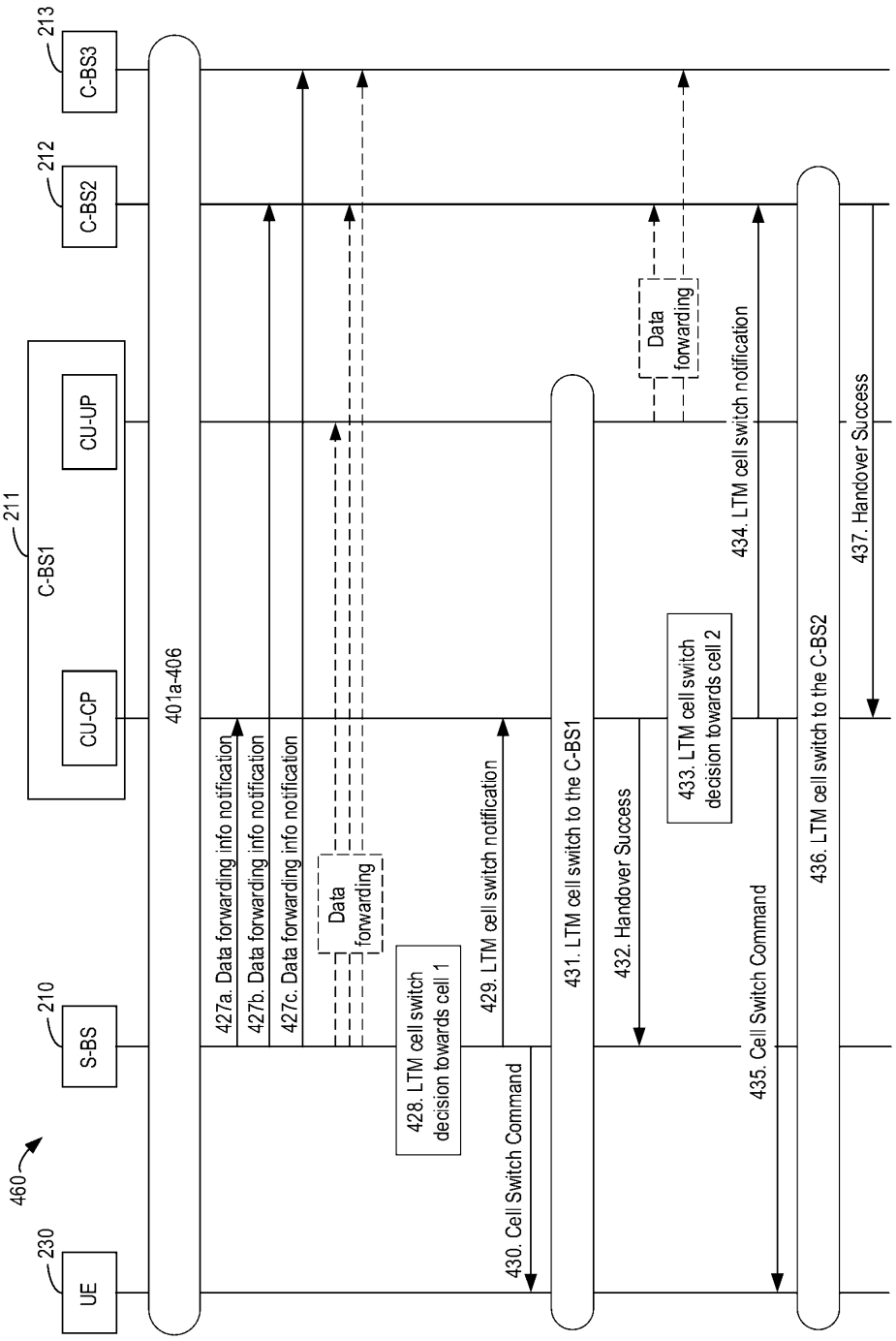
460
UE
230
S-BS
210
C-BS1
211
CU-CP
CU-UP
C-BS2
212
C-BS3
213
401a-406
427a. Data forwarding info notification
427b. Data forwarding info notification
427c. Data forwarding info notification
Data forwarding
428. LTM cell switch decision towards cell 1
429. LTM cell switch notification
430. Cell Switch Command
431. LTM cell switch to the C-BS1
432. Handover Success
433. LTM cell switch decision towards cell 2
Data forwarding
434. LTM cell switch notification
435. Cell Switch Command
436. LTM cell switch to the C-BS2
437. Handover Success

FIG. 4C

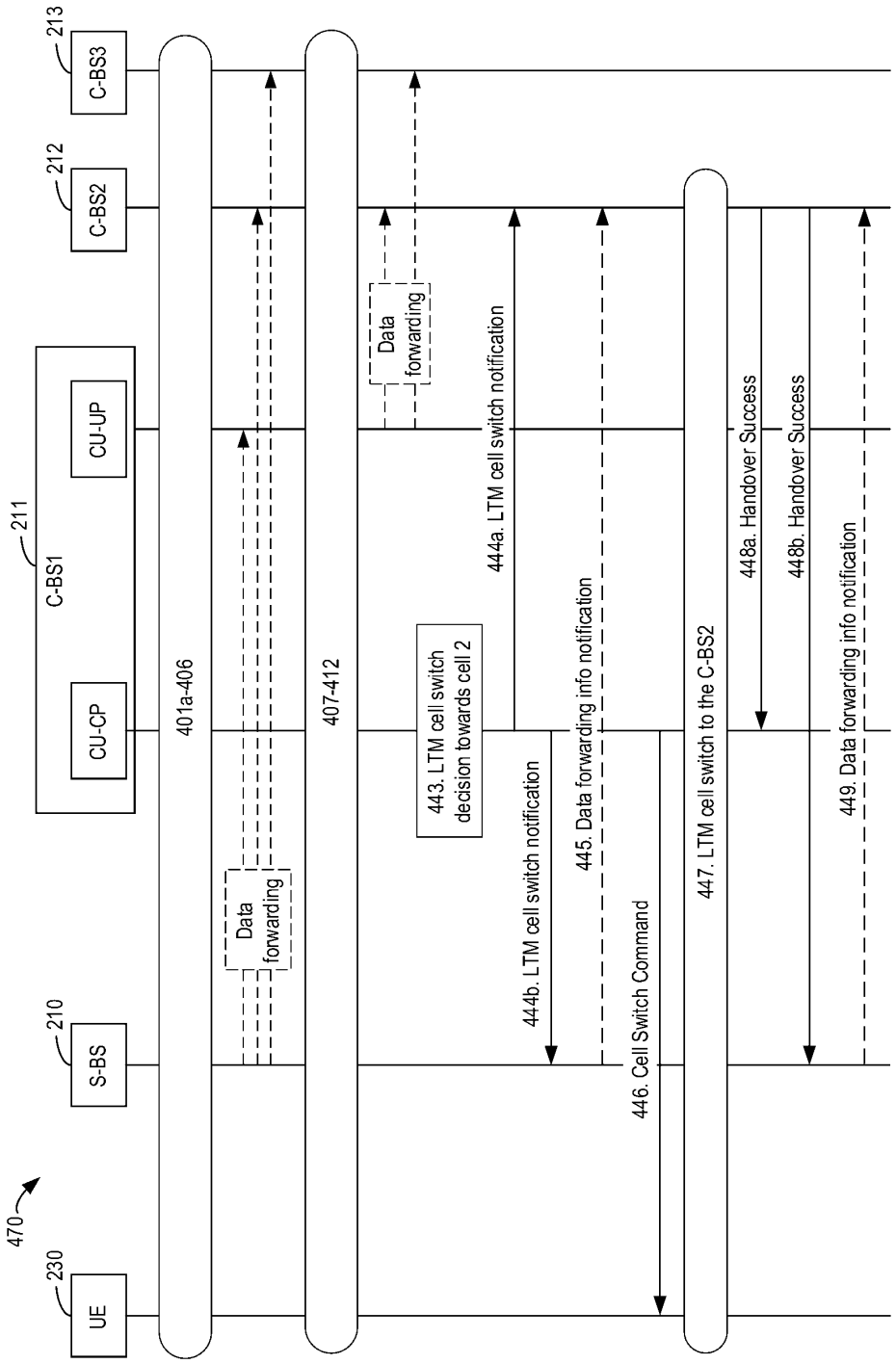
470
230
UE
210
S-BS
211
C-BS1
CU-CP
CU-UP
212
C-BS2
213
C-BS3
401a-406
407-412
Data forwarding
Data forwarding
443. LTM cell switch decision towards cell 2
444a. LTM cell switch notification
444b. LTM cell switch notification
445. Data forwarding info notification
446. Cell Switch Command
447. LTM cell switch to the C-BS2
448a. Handover Success
448b. Handover Success
449. Data forwarding info notification

FIG. 4D

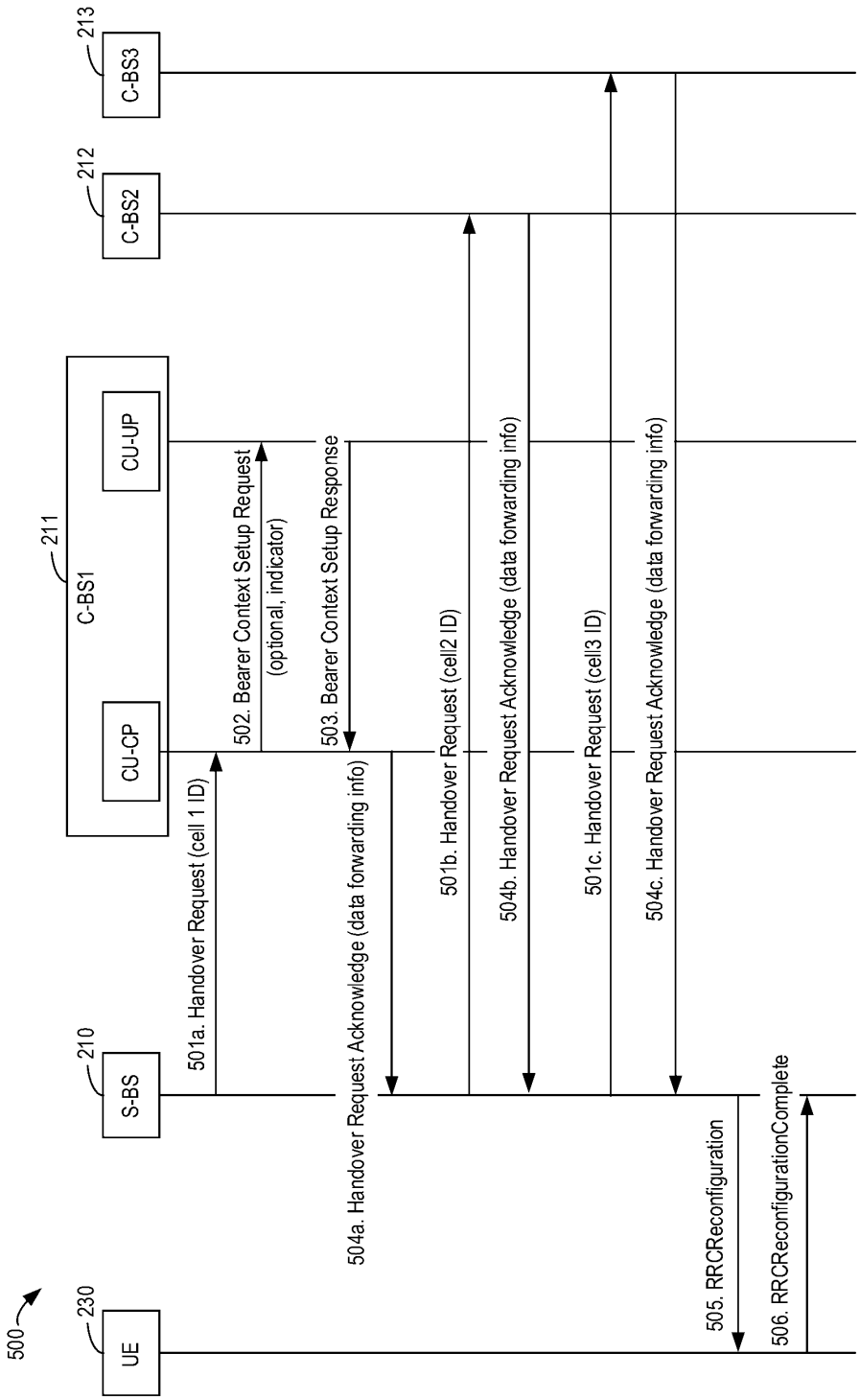
500
230
UE
210
S-BS
211
C-BS1
CU-CP
CU-UP
212
C-BS2
213
C-BS3
501a. Handover Request (cell 1 ID)
502. Bearer Context Setup Request
(optional, indicator)
503. Bearer Context Setup Response
504a. Handover Request Acknowledge (data forwarding info)
501b. Handover Request (cell2 ID)
504b. Handover Request Acknowledge (data forwarding info)
501c. Handover Request (cell3 ID)
504c. Handover Request Acknowledge (data forwarding info)
505. RRCReconfiguration
506. RRCReconfigurationComplete

FIG. 5A

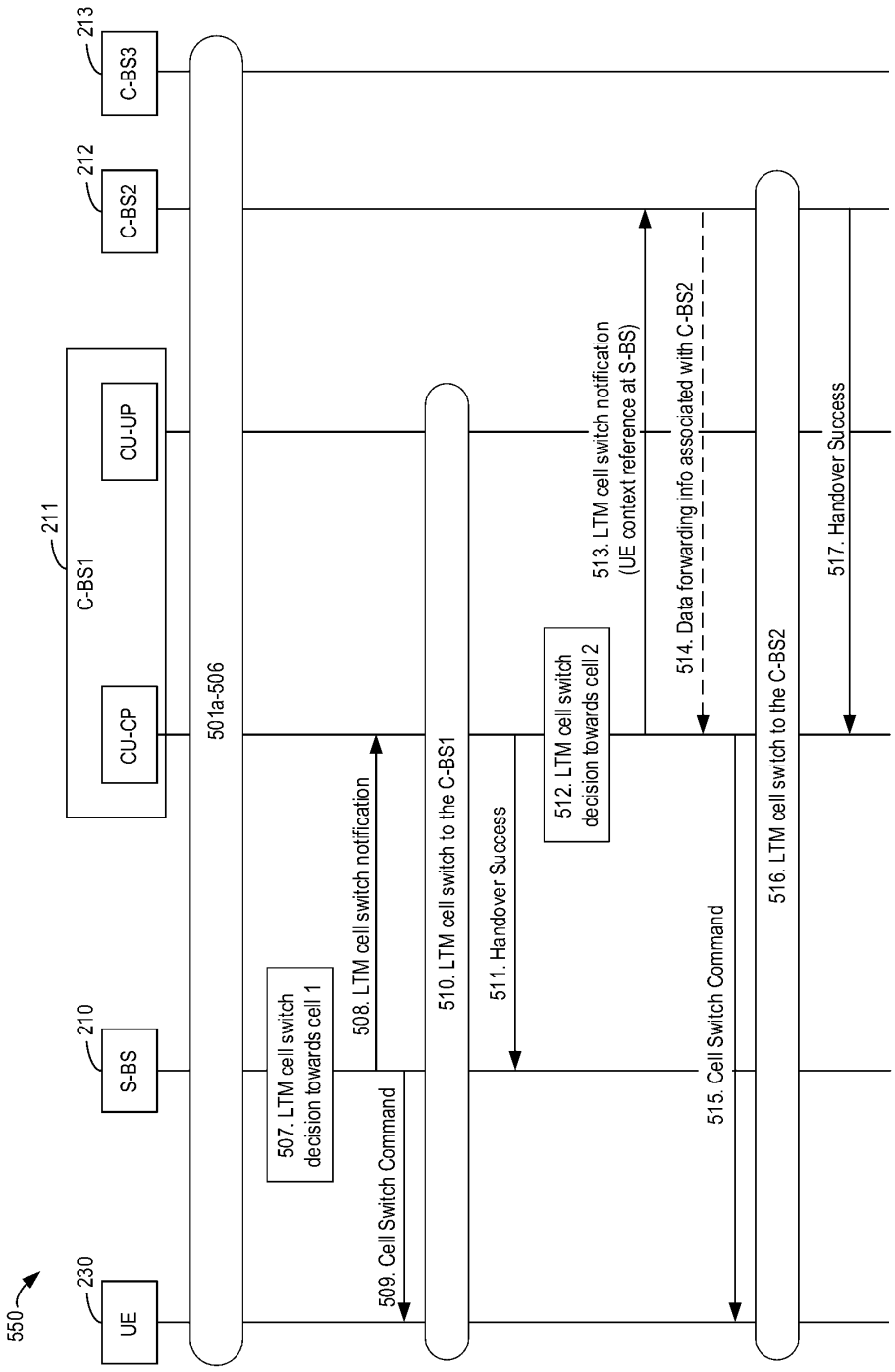
550
UE
230
S-BS
210
C-BS1
211
CU-CP
CU-UP
C-BS2
212
C-BS3
213
501a-506
507. LTM cell switch decision towards cell 1
508. LTM cell switch notification
509. Cell Switch Command
510. LTM cell switch to the C-BS1
511. Handover Success
512. LTM cell switch decision towards cell 2
513. LTM cell switch notification (UE context reference at S-BS)
514. Data forwarding info associated with C-BS2
515. Cell Switch Command
516. LTM cell switch to the C-BS2
517. Handover Success

FIG. 5B

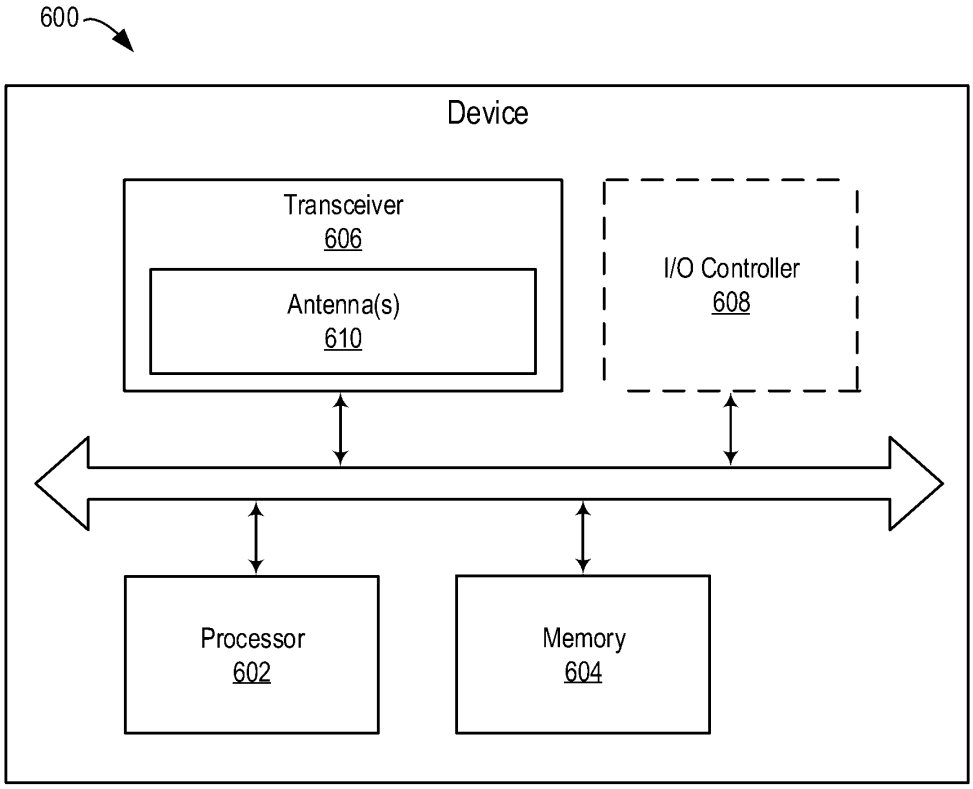
600
Device
Transceiver
606
Antenna(s)
610
I/O Controller
608
Processor
602
Memory
604

FIG. 6

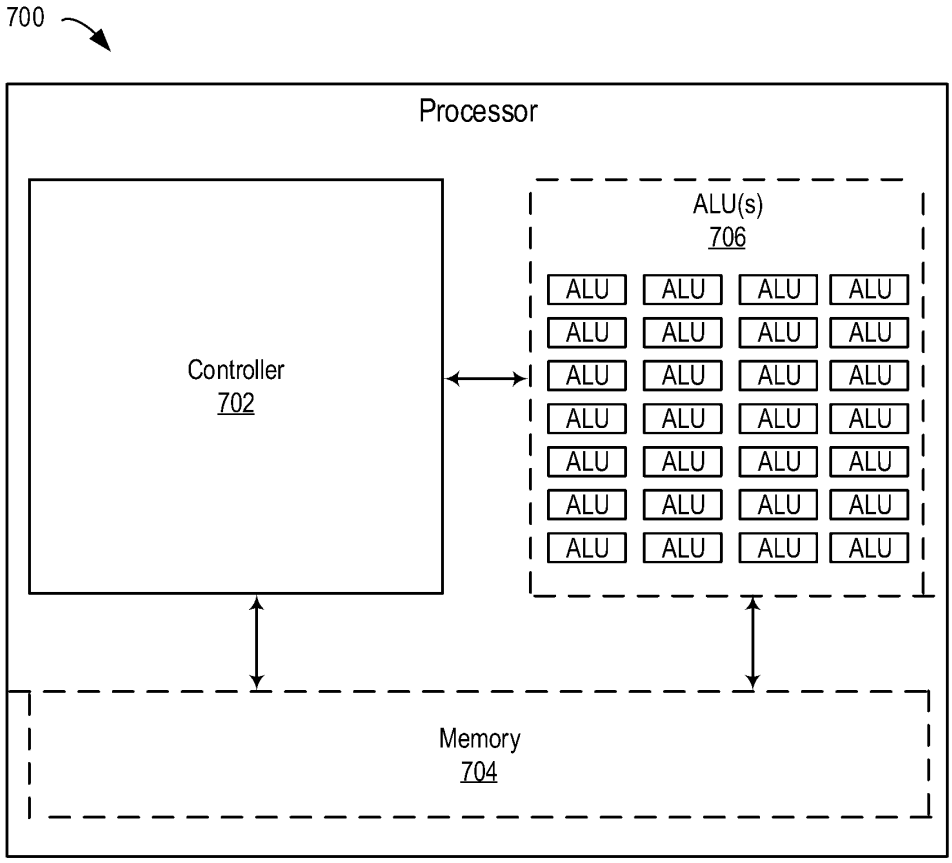

FIG. 7

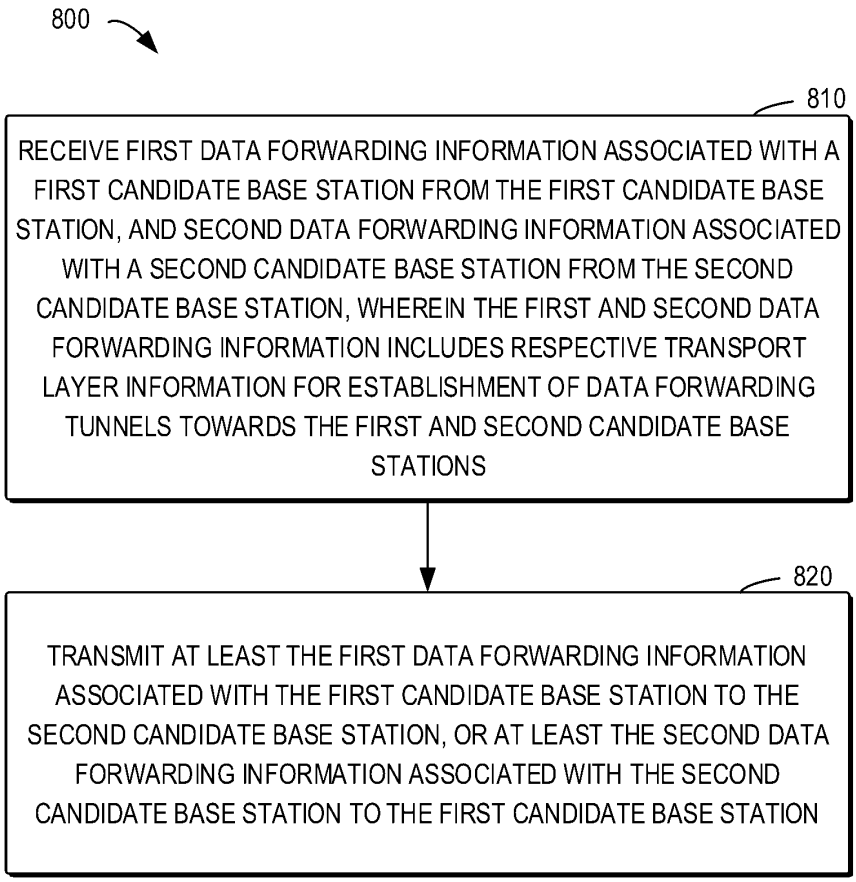
800
810
RECEIVE FIRST DATA FORWARDING INFORMATION ASSOCIATED WITH A FIRST CANDIDATE BASE STATION FROM THE FIRST CANDIDATE BASE STATION, AND SECOND DATA FORWARDING INFORMATION ASSOCIATED WITH A SECOND CANDIDATE BASE STATION FROM THE SECOND CANDIDATE BASE STATION, WHEREIN THE FIRST AND SECOND DATA FORWARDING INFORMATION INCLUDES RESPECTIVE TRANSPORT LAYER INFORMATION FOR ESTABLISHMENT OF DATA FORWARDING TUNNELS TOWARDS THE FIRST AND SECOND CANDIDATE BASE STATIONS
820
TRANSMIT AT LEAST THE FIRST DATA FORWARDING INFORMATION ASSOCIATED WITH THE FIRST CANDIDATE BASE STATION TO THE SECOND CANDIDATE BASE STATION, OR AT LEAST THE SECOND DATA FORWARDING INFORMATION ASSOCIATED WITH THE SECOND CANDIDATE BASE STATION TO THE FIRST CANDIDATE BASE STATION

FIG. 8

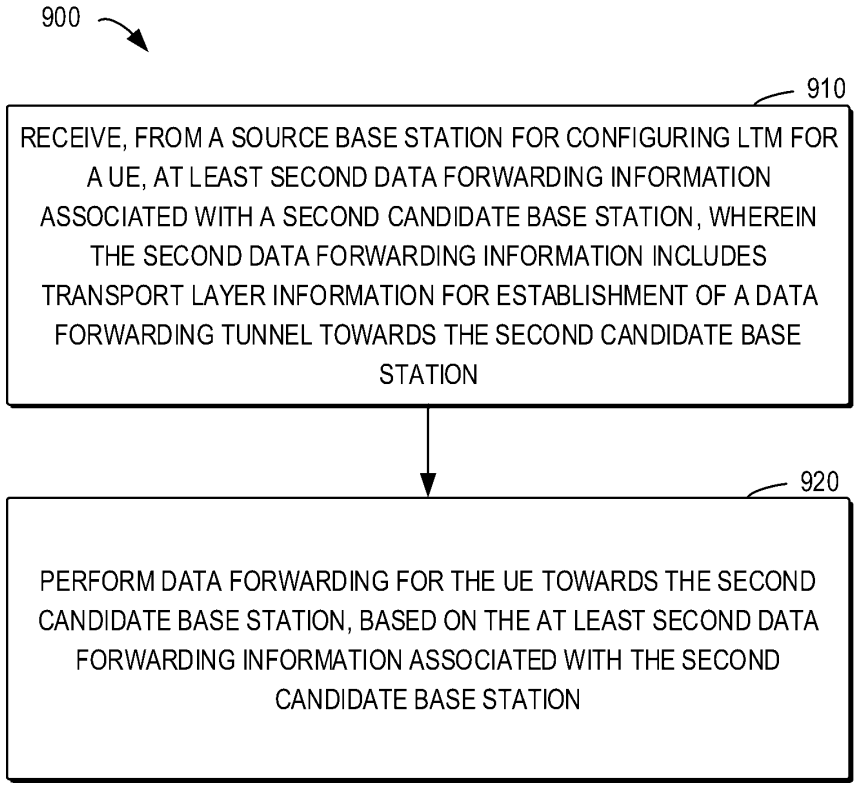
900
910
RECEIVE, FROM A SOURCE BASE STATION FOR CONFIGURING LTM FOR A UE, AT LEAST SECOND DATA FORWARDING INFORMATION ASSOCIATED WITH A SECOND CANDIDATE BASE STATION, WHEREIN THE SECOND DATA FORWARDING INFORMATION INCLUDES TRANSPORT LAYER INFORMATION FOR ESTABLISHMENT OF A DATA FORWARDING TUNNEL TOWARDS THE SECOND CANDIDATE BASE STATION
920
PERFORM DATA FORWARDING FOR THE UE TOWARDS THE SECOND CANDIDATE BASE STATION, BASED ON THE AT LEAST SECOND DATA FORWARDING INFORMATION ASSOCIATED WITH THE SECOND CANDIDATE BASE STATION

FIG. 9

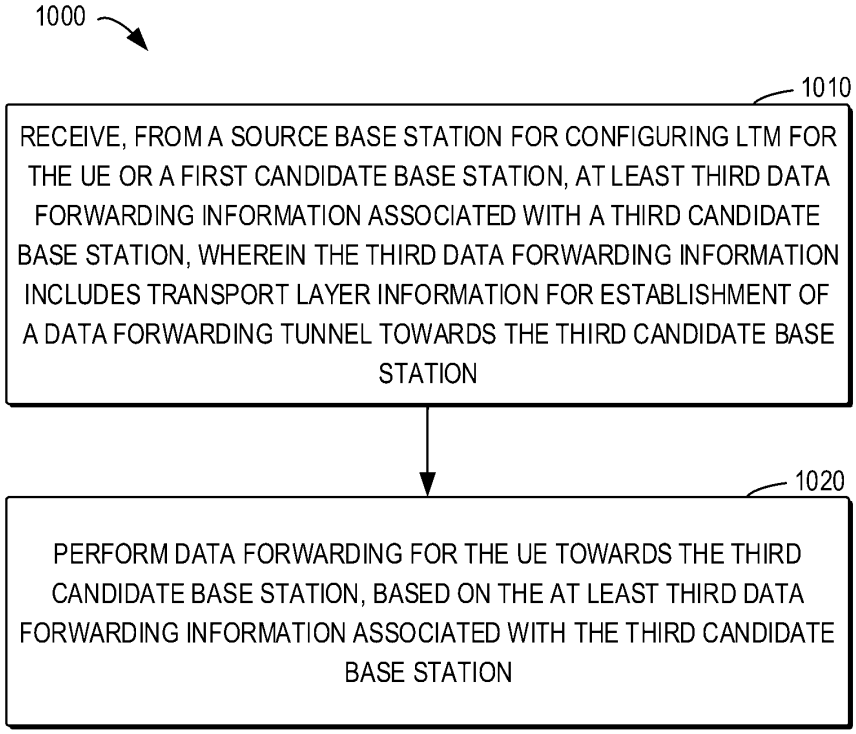
1000
1010
RECEIVE, FROM A SOURCE BASE STATION FOR CONFIGURING LTM FOR THE UE OR A FIRST CANDIDATE BASE STATION, AT LEAST THIRD DATA FORWARDING INFORMATION ASSOCIATED WITH A THIRD CANDIDATE BASE STATION, WHEREIN THE THIRD DATA FORWARDING INFORMATION INCLUDES TRANSPORT LAYER INFORMATION FOR ESTABLISHMENT OF A DATA FORWARDING TUNNEL TOWARDS THE THIRD CANDIDATE BASE STATION
1020
PERFORM DATA FORWARDING FOR THE UE TOWARDS THE THIRD CANDIDATE BASE STATION, BASED ON THE AT LEAST THIRD DATA FORWARDING INFORMATION ASSOCIATED WITH THE THIRD CANDIDATE BASE STATION

FIG. 10