(12) 按照专利合作条约所公布的国际申请

(19) 世界知识产权组织
国 际 局

(43) 国际公布日
2025 年 10 月 9 日 (09.10.2025)

WIPO | PCT

(10) 国际公布号
WO 2025/209207 A1

(51) 国际专利分类号:
C23C 16/44 (2006.01)

(21) 国际申请号: PCT/CN2025/084042

(22) 国际申请日: 2025 年 3 月 21 日 (21.03.2025)

(25) 申请语言: 中文

(26) 公布语言: 中文

(30) 优先权:
202410404731.6 2024年4月3日 (03.04.2024) CN

(71) 申请人: 北京北方华创微电子装备有限公司 (**BEIJING NAURA MICROELECTRONICS EQUIPMENT CO., LTD.**) [CN/CN]; 中国北京市大兴区北京经济技术开发区文昌大道8号 100176 (CN)。

(72) 发明人:程晨(**CHENG, Chen**); 中国北京市大兴区北京经济技术开发区文昌大道8号 100176 (CN)。
孙晋博(**SUN, Jinbo**); 中国北京市大兴区北京经济技术开发区文昌大道8号 100176 (CN)。

(74) 代理人: 北京天昊联合知识产权代理有限公司 (**TEE & HOWE INTELLECTUAL PROPERTY ATTORNEYS**); 中国北京市东城区东长安街1号东方广场东方经贸城西一办公楼5层1,6-12室 100738 (CN)。

(81) 指定国(除另有指明，要求每一种可提供的国家保护): AE, AG, AL, AM, AO, AT, AU, AZ, BA, BB, BG, BH, BN, BR, BW, BY, BZ, CA, CH, CL, CN, CO, CR, CU, CV, CZ, DE, DJ, DK, DM, DO, DZ, EC, EE, EG, ES, FI, GB, GD, GE, GH, GM, GT, HN, HR, HU, ID, IL, IN, IQ, IR, IS, IT, JM, JO, JP, KE, KG, KH, KN, KP, KR, KW, KZ, LA, LC, LK, LR, LS, LU, LY, MA, MD, MG, MK, MN, MU, MW, MX, MY, MZ, NA, NG, NI, NO, NZ, OM, PA, PE, PG, PH, PL, PT, QA, RO, RS, RU, RW, SA, SC, SD, SE, SG, SK, SL, ST, SV, SY, TH, TJ, TM, TN, TR, TT, TZ, UA, UG, US, UY, UZ, VC, VN, WS, ZA, ZM, ZW。

(84) 指定国(除另有指明，要求每一种可提供的地区保护): ARIPO (BW, CV, GH, GM, KE, LR, LS, MW, MZ, NA, RW, SC, SD, SL, ST, SZ, TZ, UG, ZM, ZW), 欧亚 (AM, AZ, BY, KG, KZ, RU, TJ, TM), 欧洲 (AL, AT, BE,

(54) **Title:** SEMICONDUCTOR PROCESS APPARATUS AND EXHAUST GAS TREATMENT DEVICE THEREOF

(54) 发明名称: 半导体工艺设备及其排气处理装置

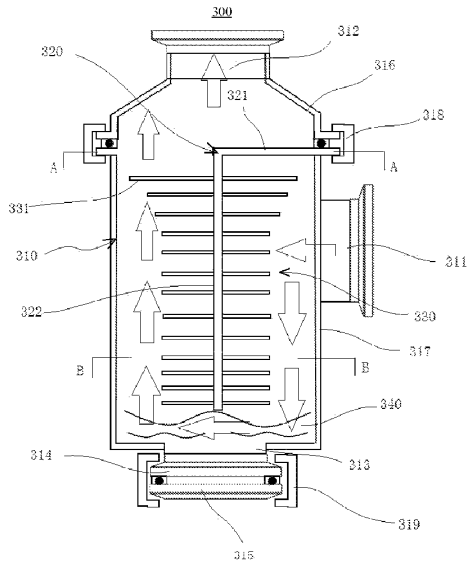

图 1

(57) **Abstract:** Provided in the present application are a semiconductor process apparatus and an exhaust gas treatment device thereof. The device comprises a housing, a flow-guiding component and an adsorption component, wherein the housing comprises an inlet and an outlet, the inlet being configured to introduce a process gas discharged from a reaction chamber into the housing; the flow-guiding component is disposed in the housing and divides the interior of the housing into fluid channels, which comprise an inflow channel communicating with the inlet and an outflow channel communicating with the outlet, the inflow channel communicating with the outflow channel; and part of the adsorption component is arranged in the inflow channel, and the remaining part of the adsorption component is arranged in the outflow channel and configured to adsorb by-products in the process gas. The process gas sequentially passes through the inflow channel and the outflow channel, and the adsorption component adsorbs the by-products in the process gas during the flow of the process gas. The flow-guiding component increases the flow resistance and flow path of the process gas, and extends the residence time of the process gas in the housing, such that the adsorption component fully adsorbs the by-products in the process gas, thereby improving the adsorption rate of the by-products.

WO 2025/209207 A1

[见续页]

BG, CH, CY, CZ, DE, DK, EE, ES, FI, FR, GB, GR, HR, HU, IE, IS, IT, LT, LU, LV, MC, ME, MK, MT, NL, NO, PL, PT, RO, RS, SE, SI, SK, SM, TR), OAPI (BF, BJ, CF, CG, CI, CM, GA, GN, GQ, GW, KM, ML, MR, NE, SN, TD, TG)。

本国际公布:
— 包括国际检索报告(条约第21条(3))。

(57) 摘要: 本申请提供的半导体工艺设备及其排气处理装置，该装置包括壳体、导流部件以及吸附部件，壳体包括入口和出口，入口用于向壳体内通入反应腔室排出的工艺气体；导流部件设置在壳体内，并将壳体内部分隔形成流体通道，流体通道包括分别与入口和出口连通的入流通道和出流通道，入流通道和出流通道连通；吸附部件部分设置在入流通道中，吸附部件的其余部分设置在出流通道中，用于吸附工艺气体中的副产物。工艺气体依次穿过入流通道和出流通道，吸附部件在工艺气体流动过程中吸收工艺气体中的副产物。导流部件增加了工艺气体的流动阻力和流动路程，延长了工艺气体在壳体内的停留时间，使吸附部件充分吸收工艺气体中的副产物，提高了副产物的吸收率。