FIG. 1 (PRIOR ART)

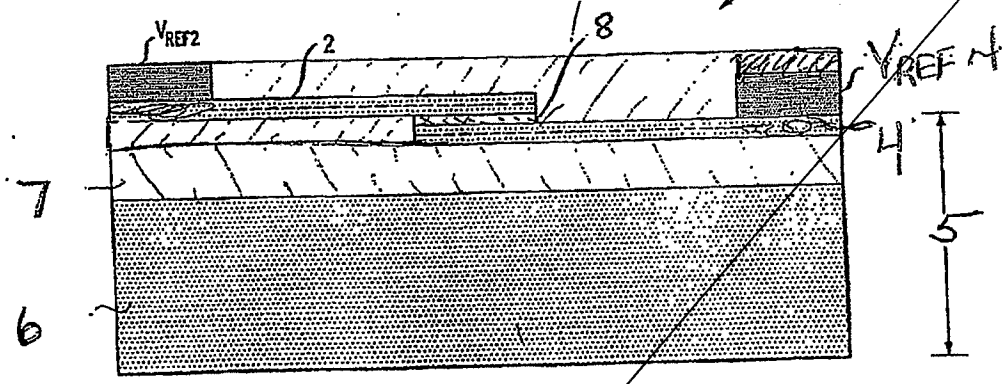

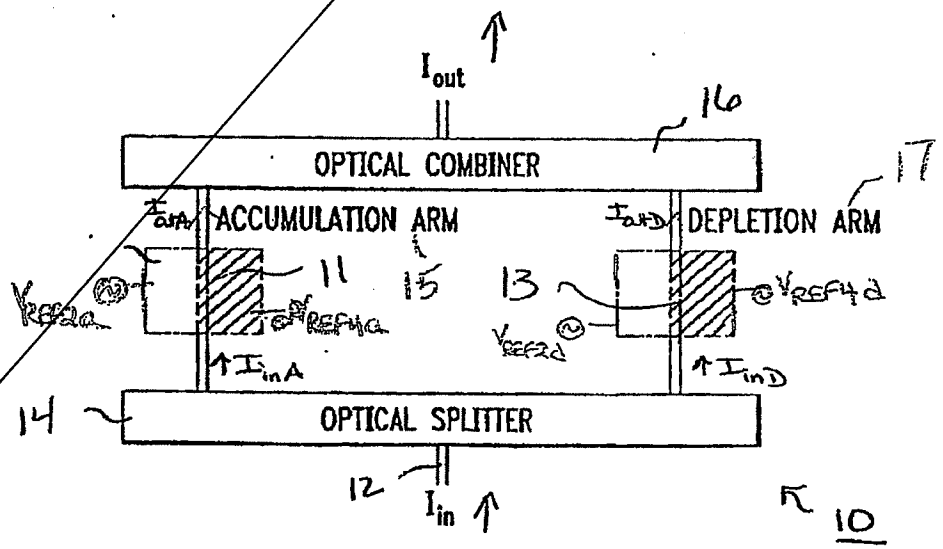

FIG. 2 (PRIOR ART)

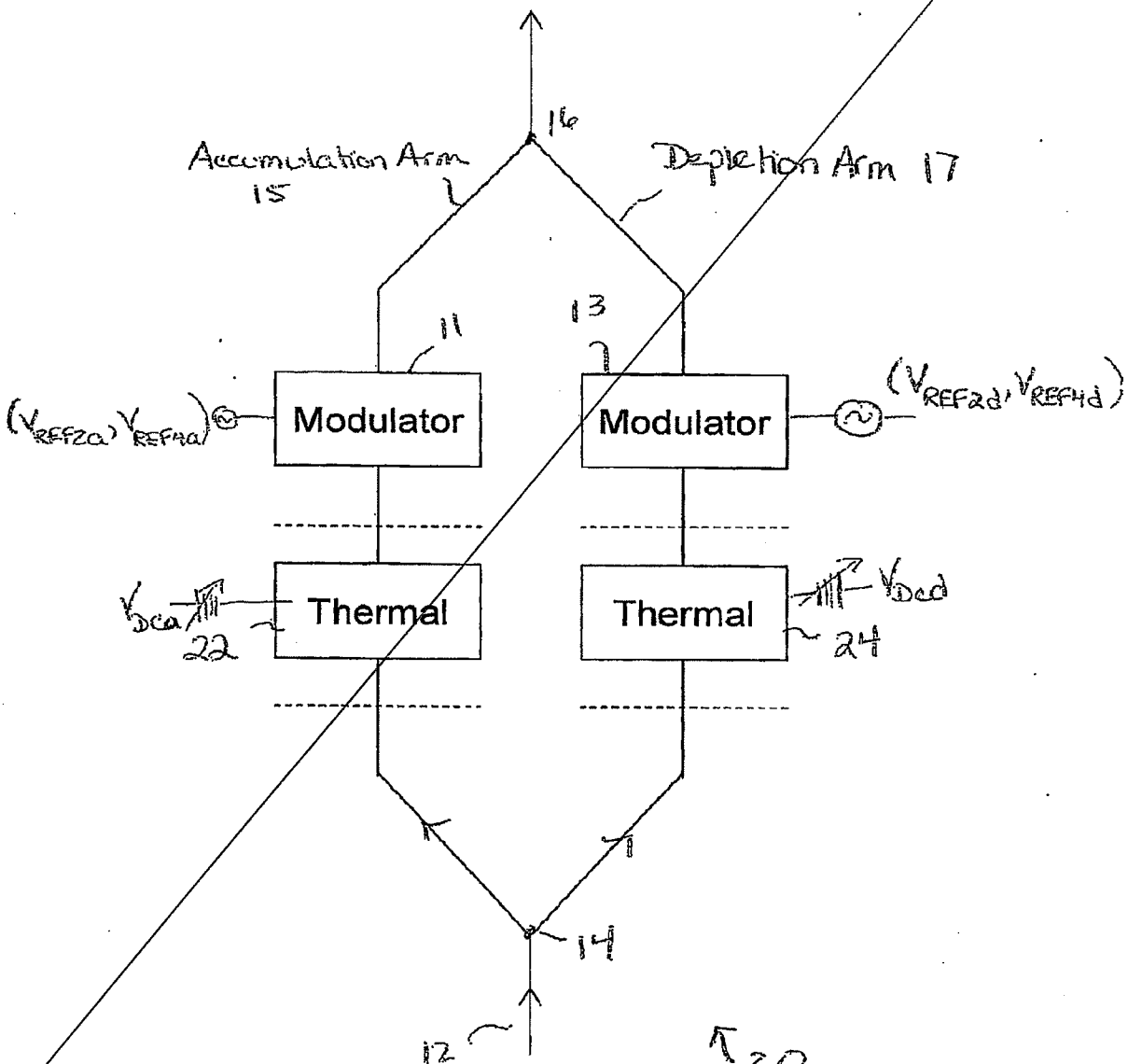
16
Accumulation Arm
15
Depletion Arm 17
11
13
Modulator
Modulator
(V_{REF2a}, V_{REF4a})
(V_{REF2d}, V_{REF4d})
Thermal
Thermal
V_{Dca}
22
V_{Dcd}
24
14
12
20

FIG. 3

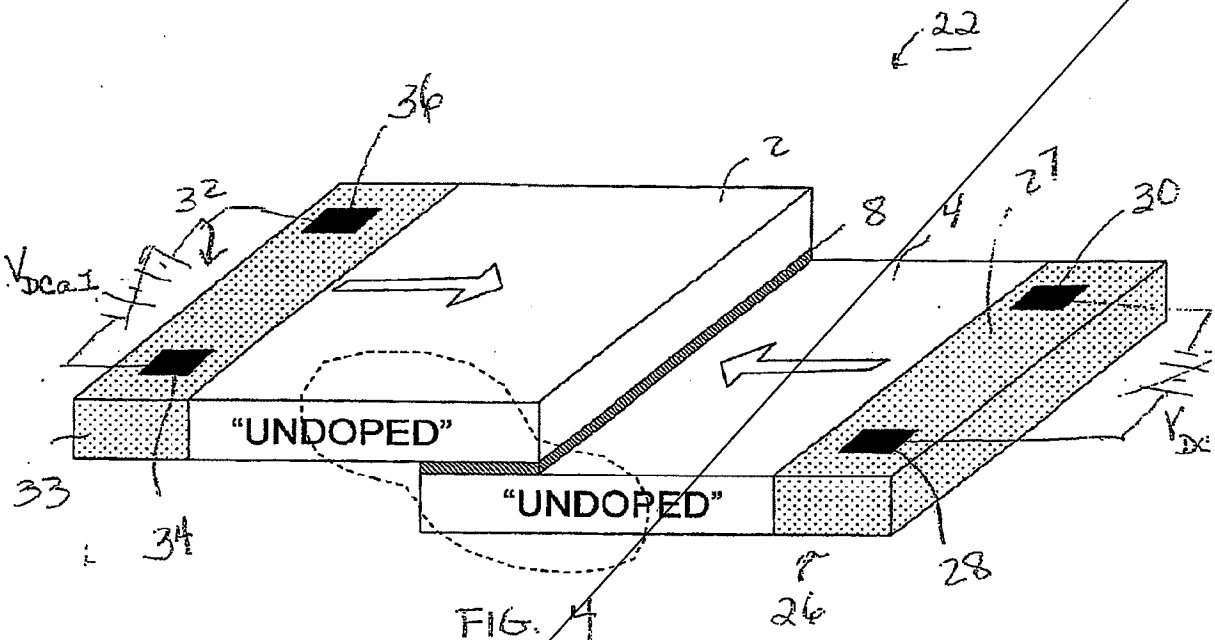
22
36
2
32
8
4
27
30
V_{bcal}
"UNDOPED"
"UNDOPED"
33
34
28
26
V_{DX}

FIG. 4

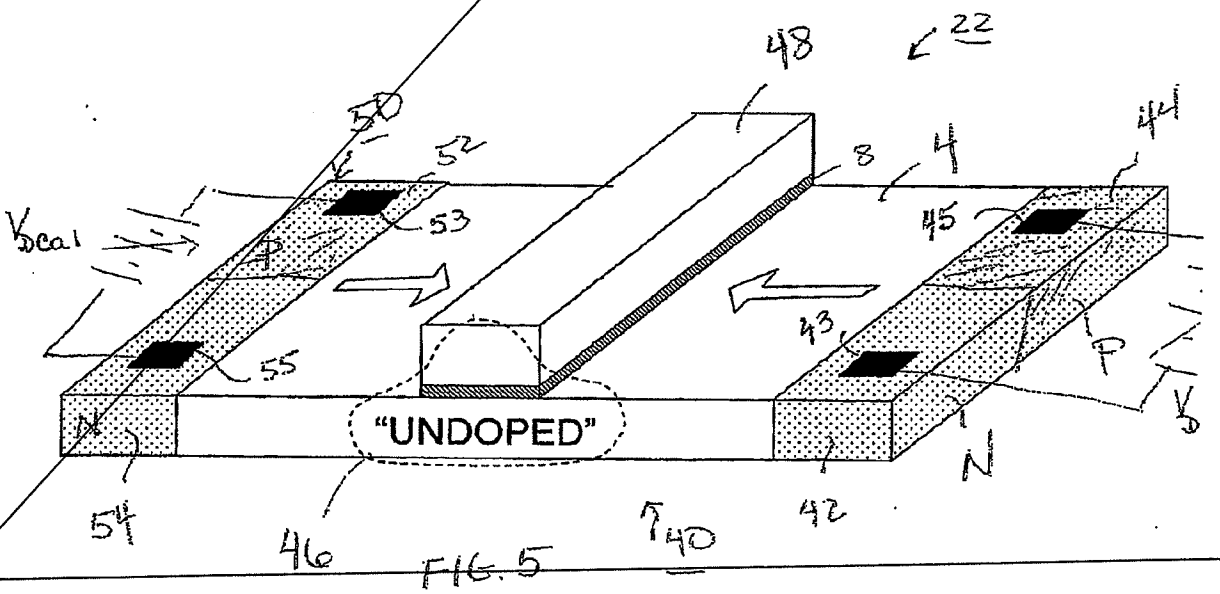
48
22
50
52
8
4
44
V_{bcal}
53
45
43
55
"UNDOPED"
54
46
42
40
P
N
V_D

FIG. 5

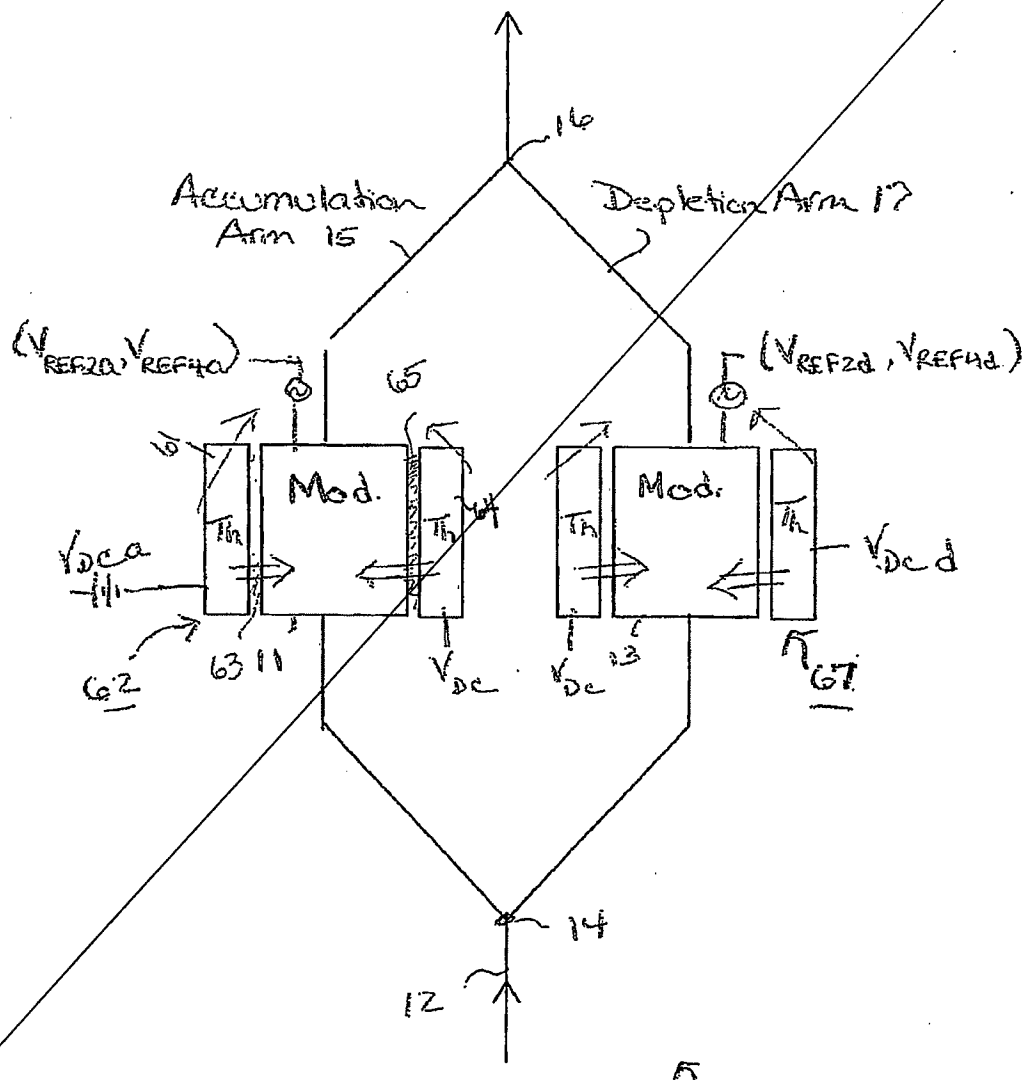
16
Accumulation Arm 15
Depletion Arm 17
(V_{REF2a}, V_{REF4a})
(V_{REF2d}, V_{REF4d})
65
61
64
Mod.
Mod.
Th
$V_{DC}a$
$V_{DC}d$
62
63
11
V_{DC}
13
67
14
12
60

FIG. 6

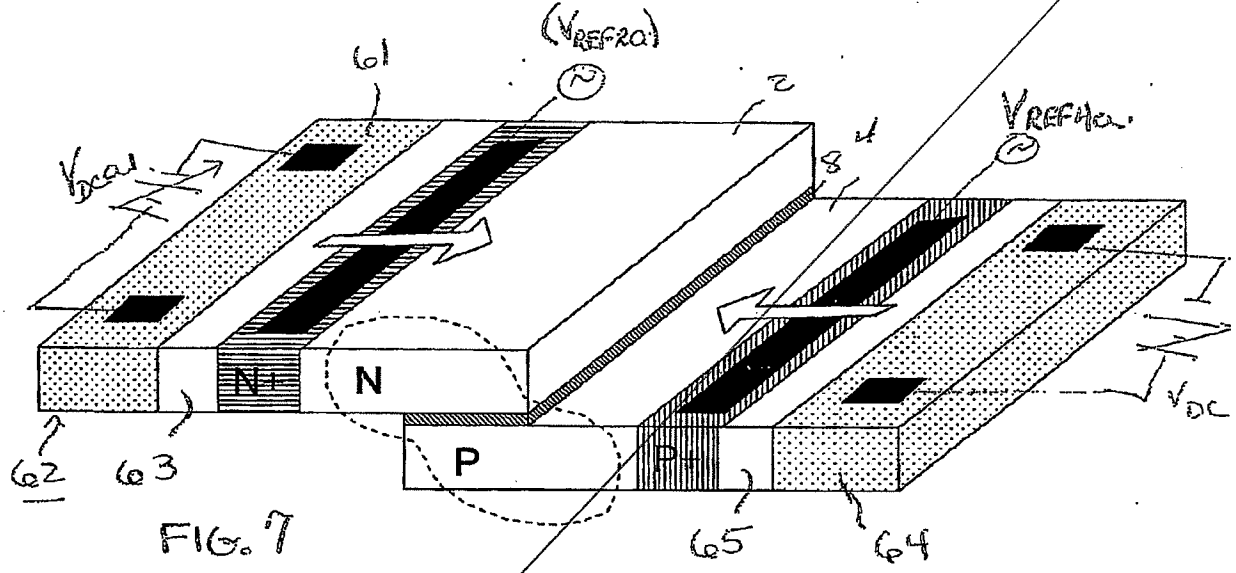

61
(V_{REF2a})
2
V_{REF4a}
V_{DCa1}
8
4
N+
N
P
P+
V_{DC}
62
63
65
64

FIG. 7

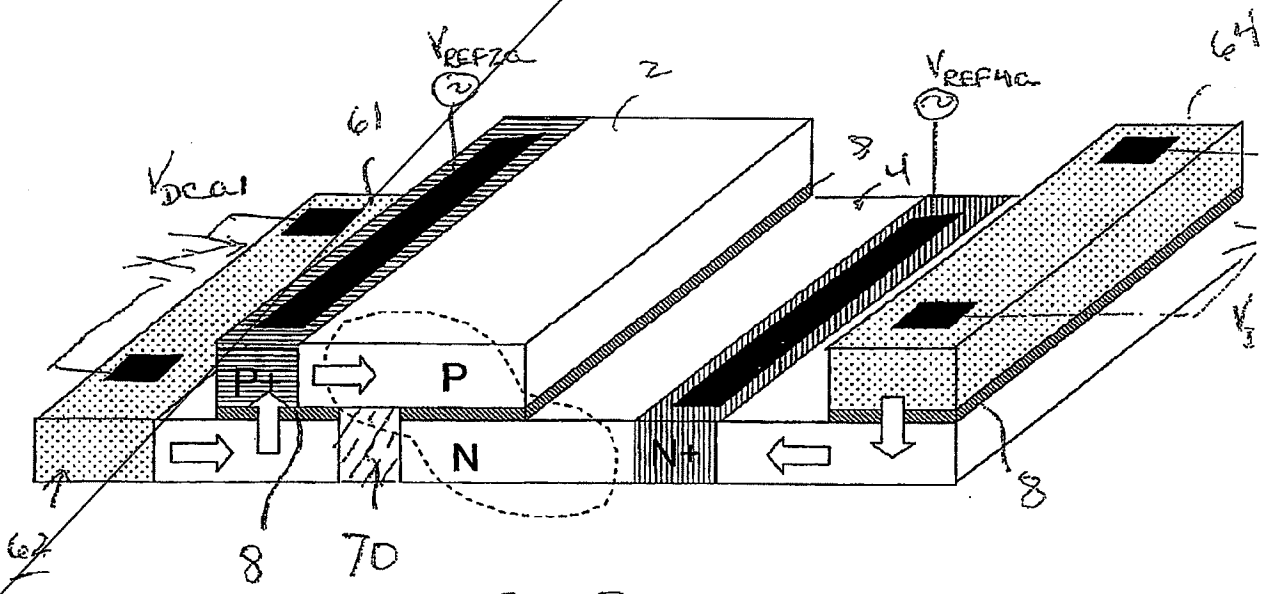

V_{REF2a}
2
V_{REF4a}
64
61
V_{DCa1}
8
4
P+
P
N
N+
62
8
70
8

FIG. 8

FIG. 1

PRIOR ART

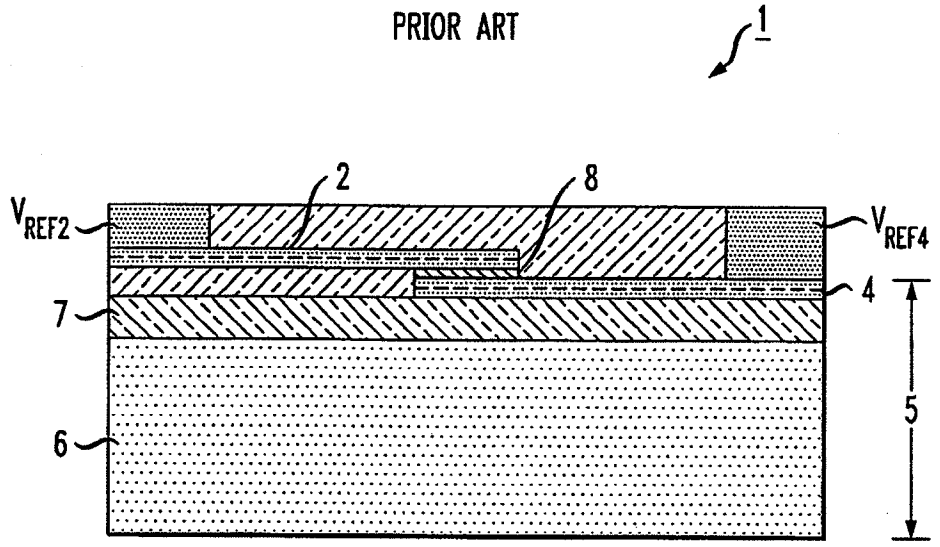

FIG. 2

PRIOR ART

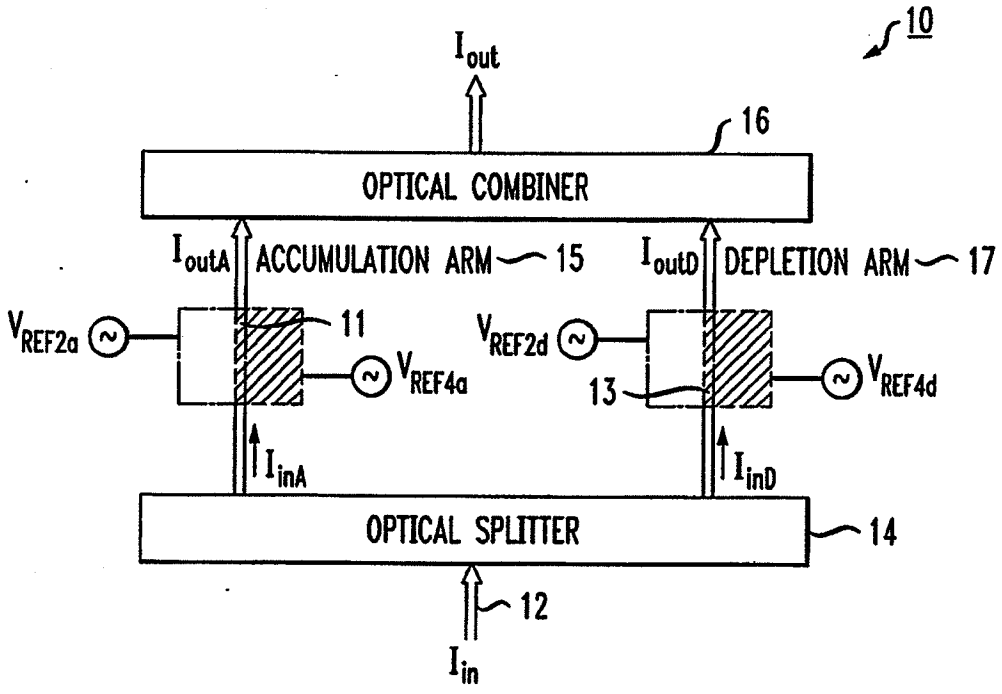

FIG. 3

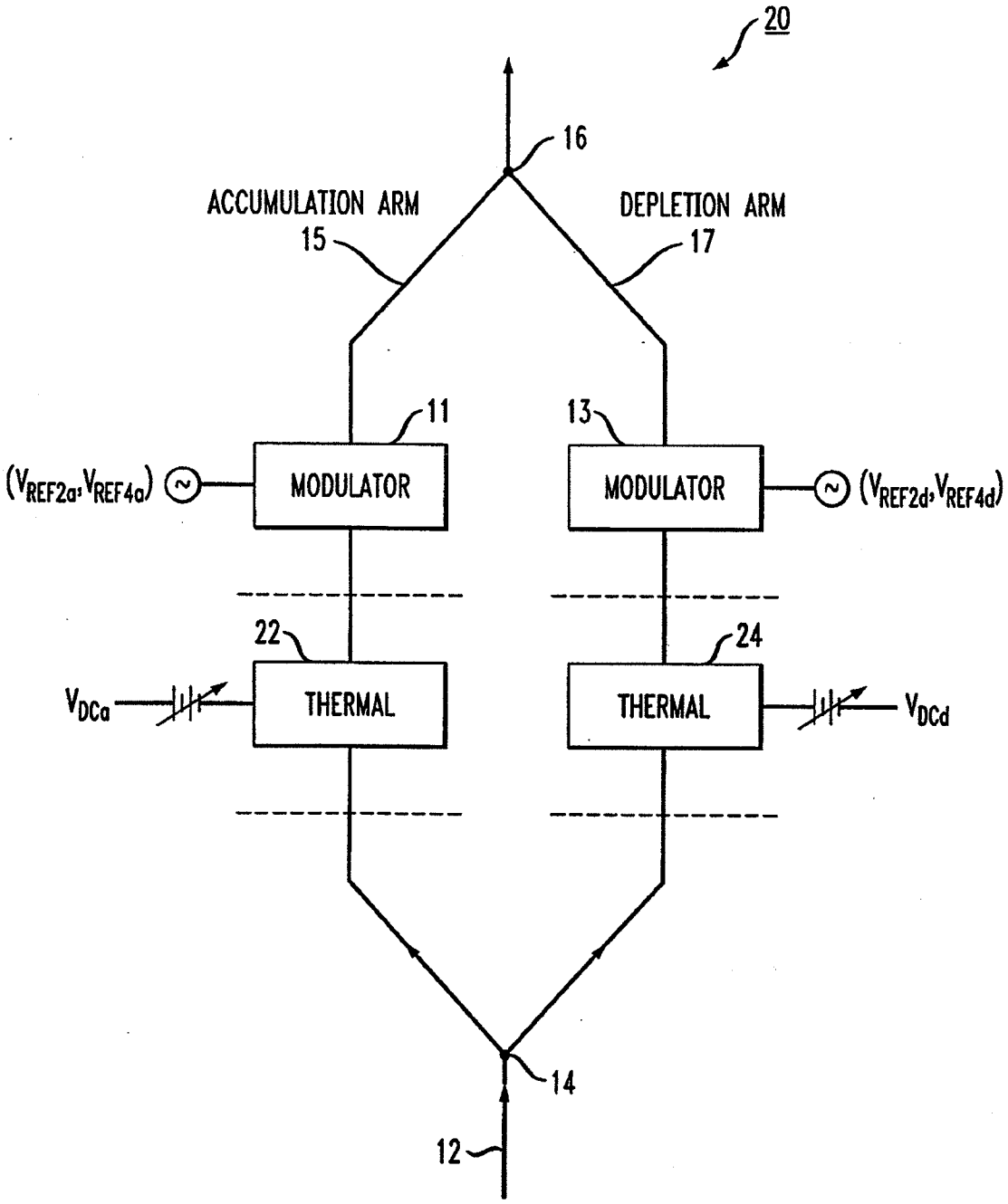
20
16
ACCUMULATION ARM
15
DEPLETION ARM
17
11
13
MODULATOR
MODULATOR
(V_{REF2a}, V_{REF4a})
(V_{REF2d}, V_{REF4d})
22
24
THERMAL
THERMAL
V_{DCa}
V_{DCd}
14
12

FIG. 4

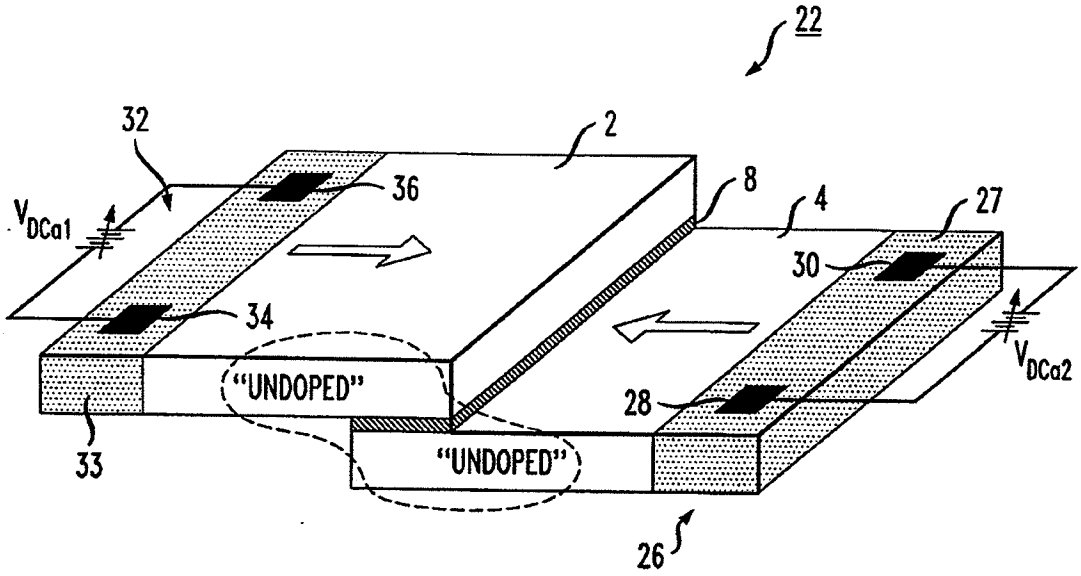
22
32
2
36
8
4
27
V_{DCa1}
30
34
"UNDOPED"
V_{DCa2}
28
33
"UNDOPED"
26

FIG. 5

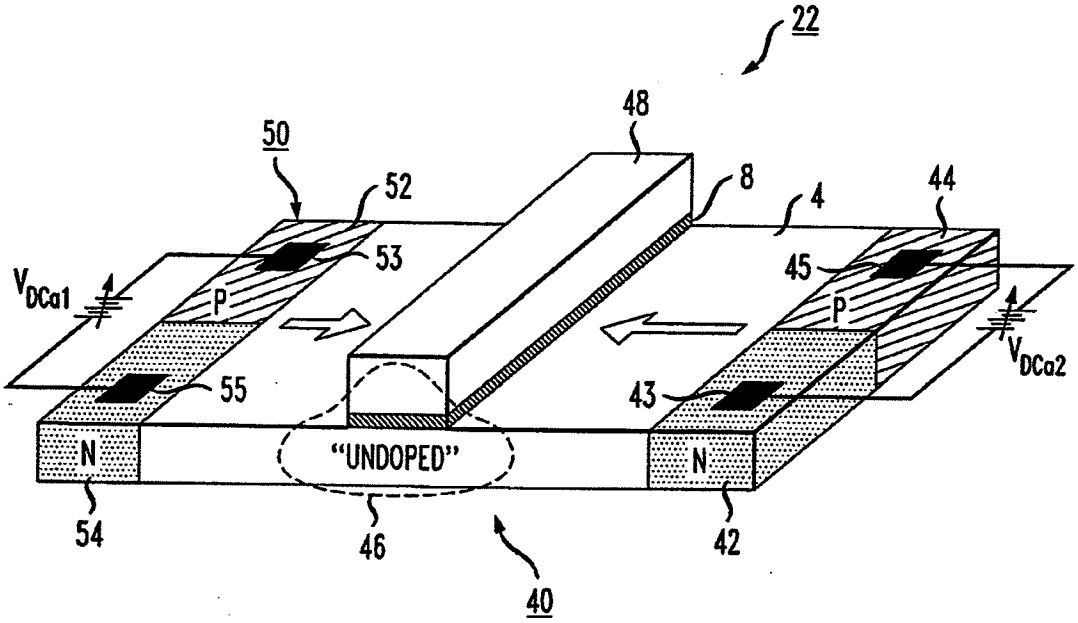
22
48
50
52
8
4
44
53
45
V_{DCa1}
P
P
V_{DCa2}
55
43
N
"UNDOPED"
N
54
46
42
40

FIG. 6

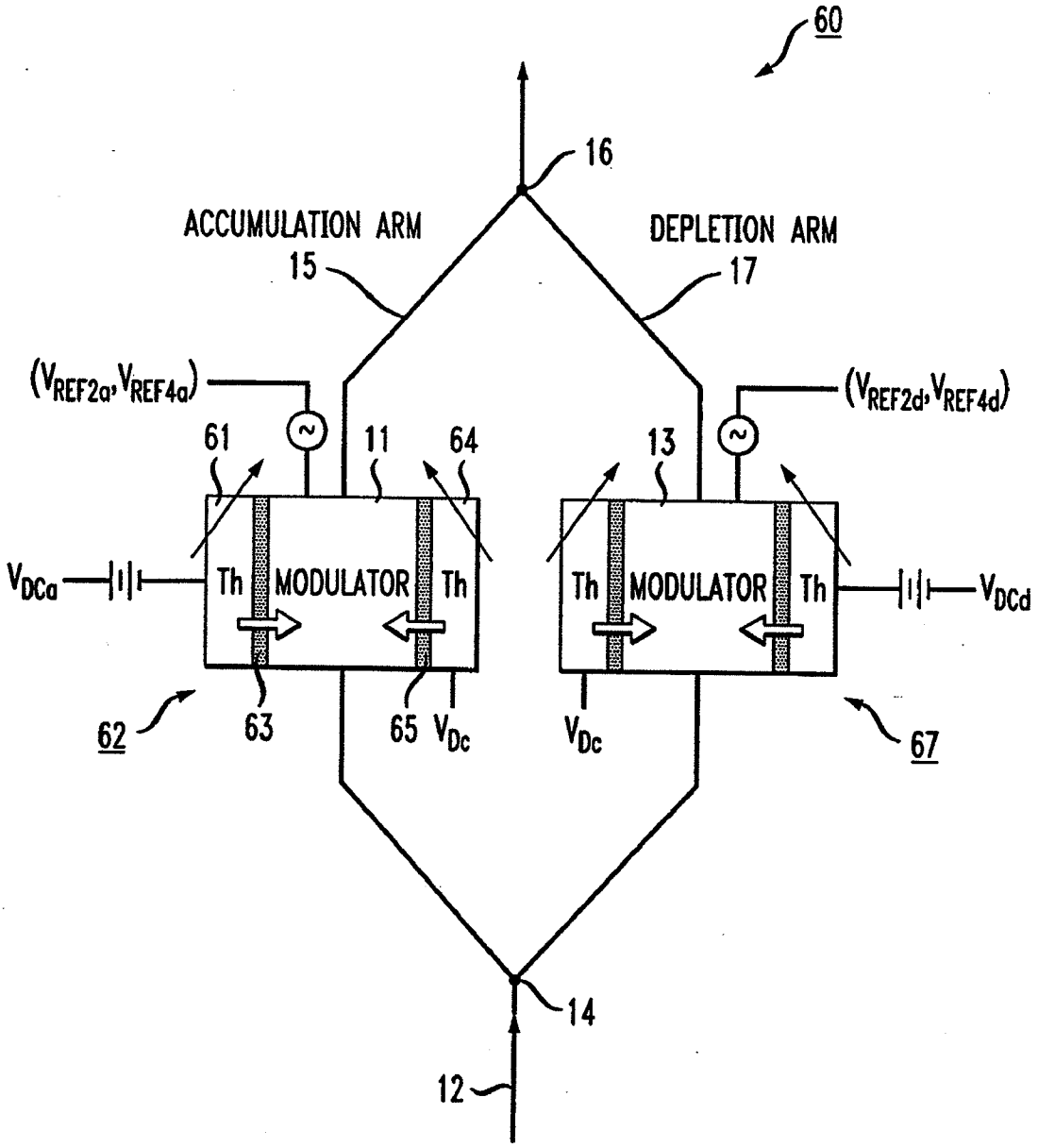
60
16
ACCUMULATION ARM
15
DEPLETION ARM
17
(V_{REF2a}, V_{REF4a})
(V_{REF2d}, V_{REF4d})
61
11
64
13
V_{DCa}
Th
MODULATOR
Th
Th
MODULATOR
Th
V_{DCd}
62
63
65
V_{Dc}
V_{Dc}
67
14
12

FIG. 7

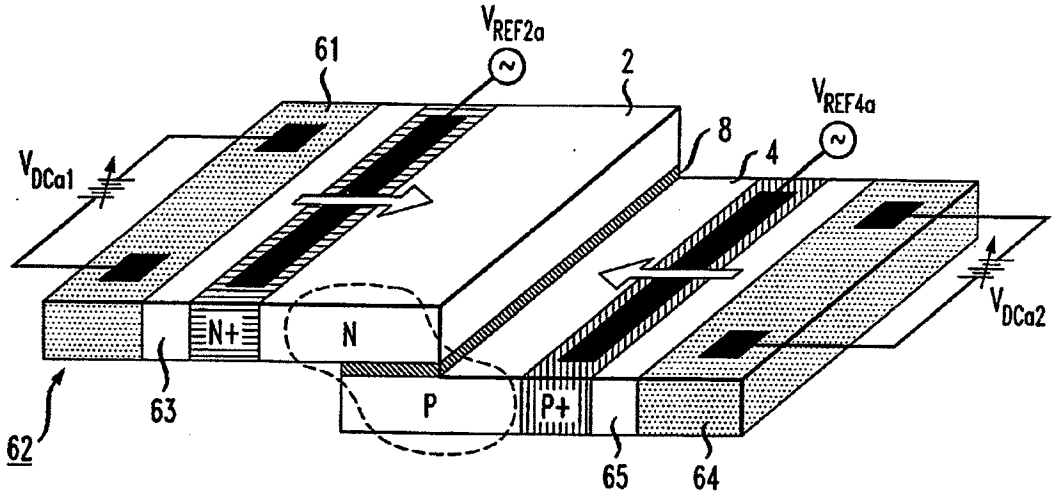
V_{REF2a}
61
2
V_{REF4a}
8
4
V_{DCa1}
V_{DCa2}
N+
N
P
P+
63
62
65
64

FIG. 8

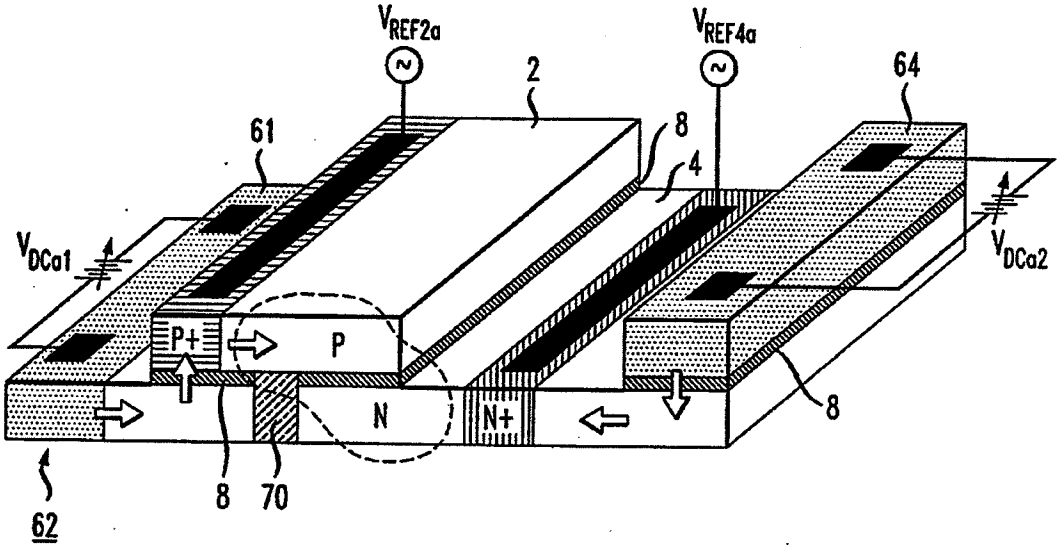
V_{REF2a}
V_{REF4a}
2
64
61
8
4
V_{DCa1}
V_{DCa2}
P+
P
N
N+
8
8
70
62