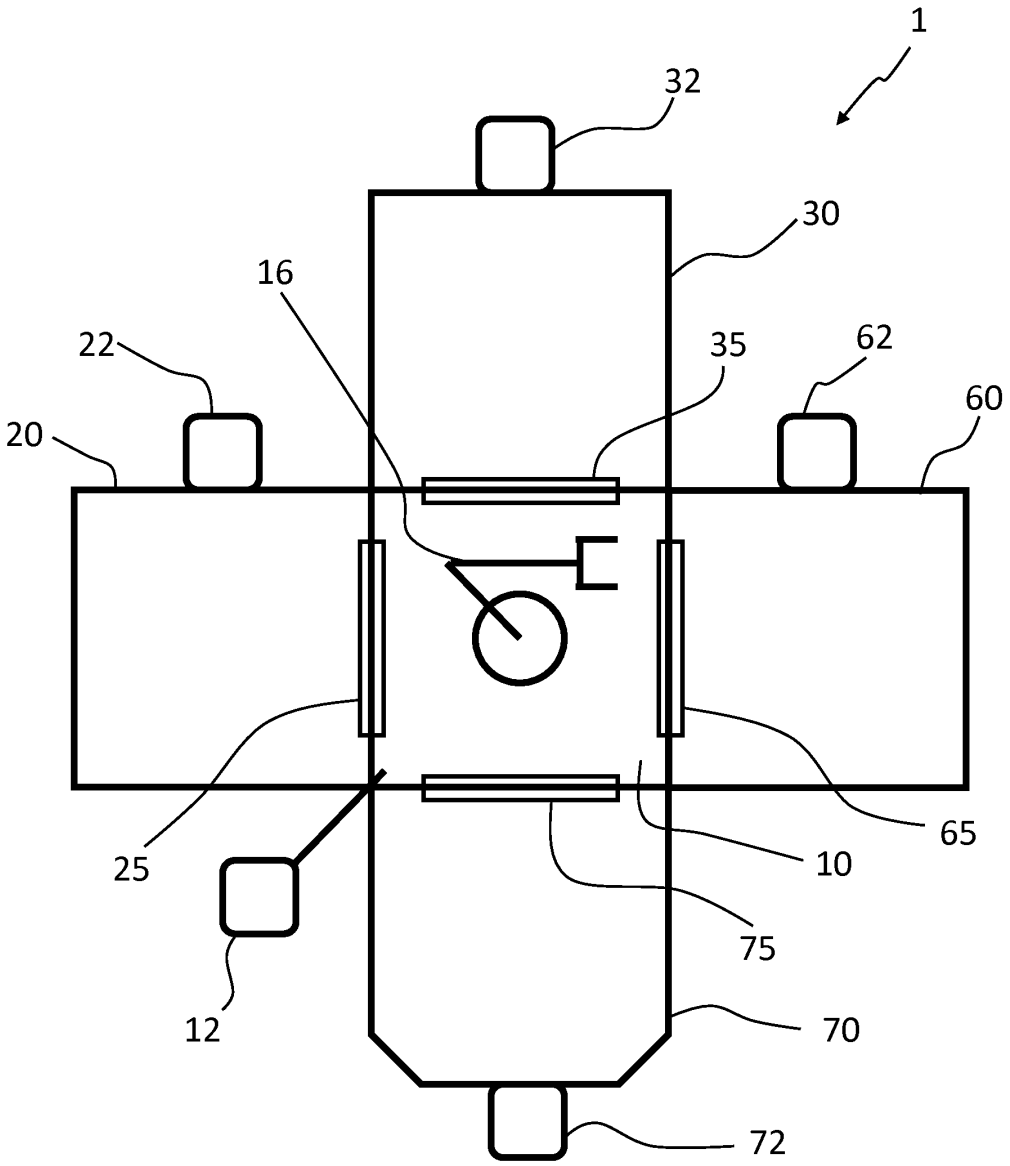

Fig. 1

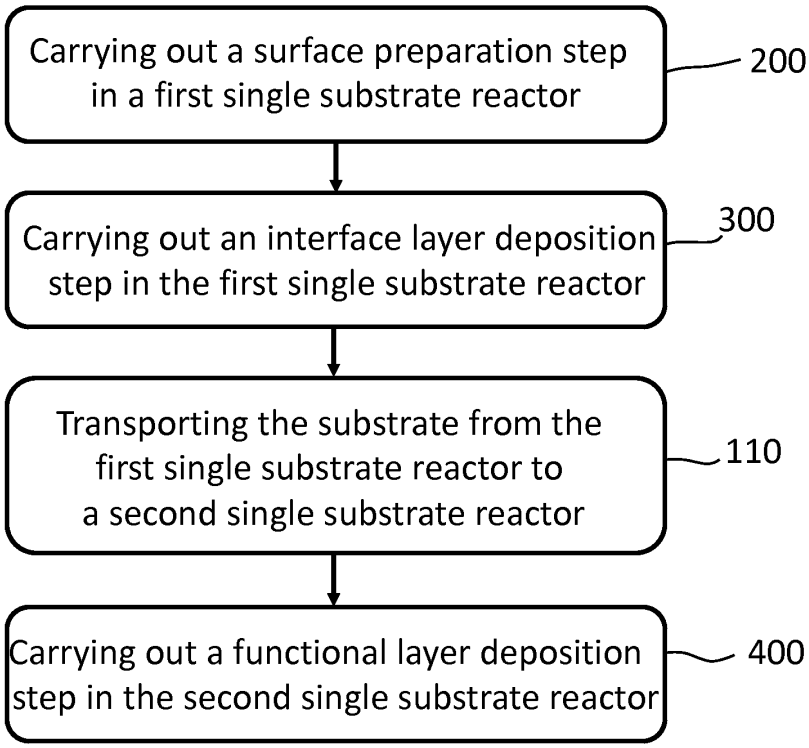
Carrying out a surface preparation step in a first single substrate reactor
200
Carrying out an interface layer deposition step in the first single substrate reactor
300
Transporting the substrate from the first single substrate reactor to a second single substrate reactor
110
Carrying out a functional layer deposition step in the second single substrate reactor
400

Fig. 2

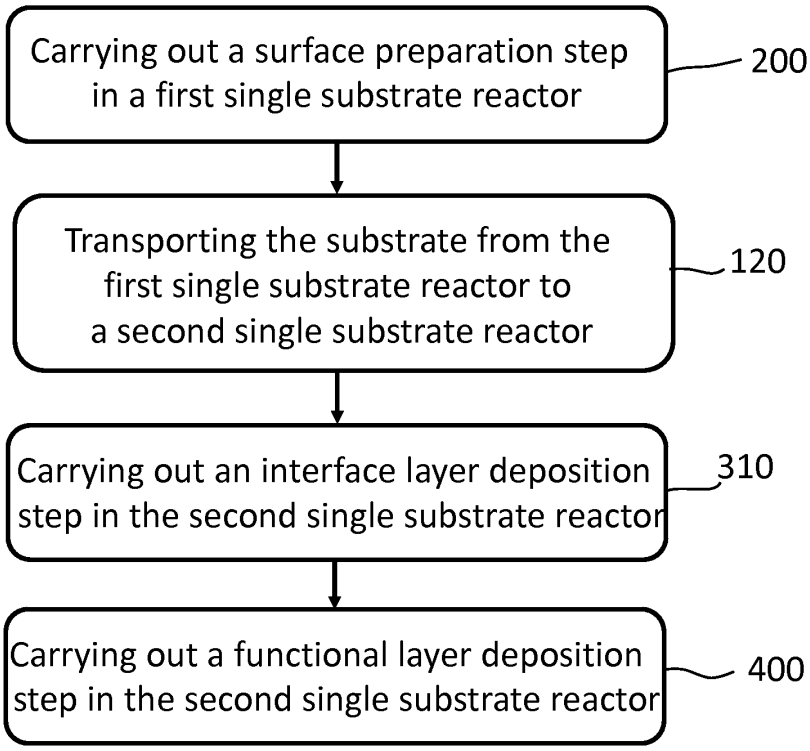
Carrying out a surface preparation step in a first single substrate reactor
200
Transporting the substrate from the first single substrate reactor to a second single substrate reactor
120
Carrying out an interface layer deposition step in the second single substrate reactor
310
Carrying out a functional layer deposition step in the second single substrate reactor
400

Fig. 3

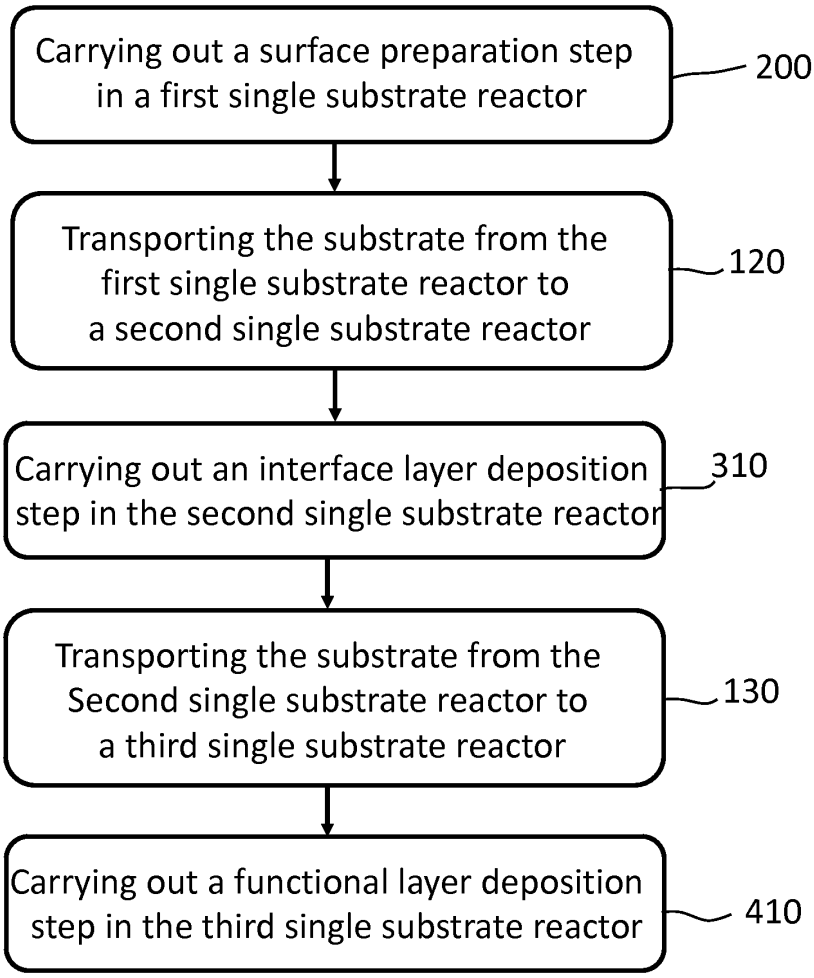
Carrying out a surface preparation step in a first single substrate reactor
200
Transporting the substrate from the first single substrate reactor to a second single substrate reactor
120
Carrying out an interface layer deposition step in the second single substrate reactor
310
Transporting the substrate from the Second single substrate reactor to a third single substrate reactor
130
Carrying out a functional layer deposition step in the third single substrate reactor
410

Fig. 4

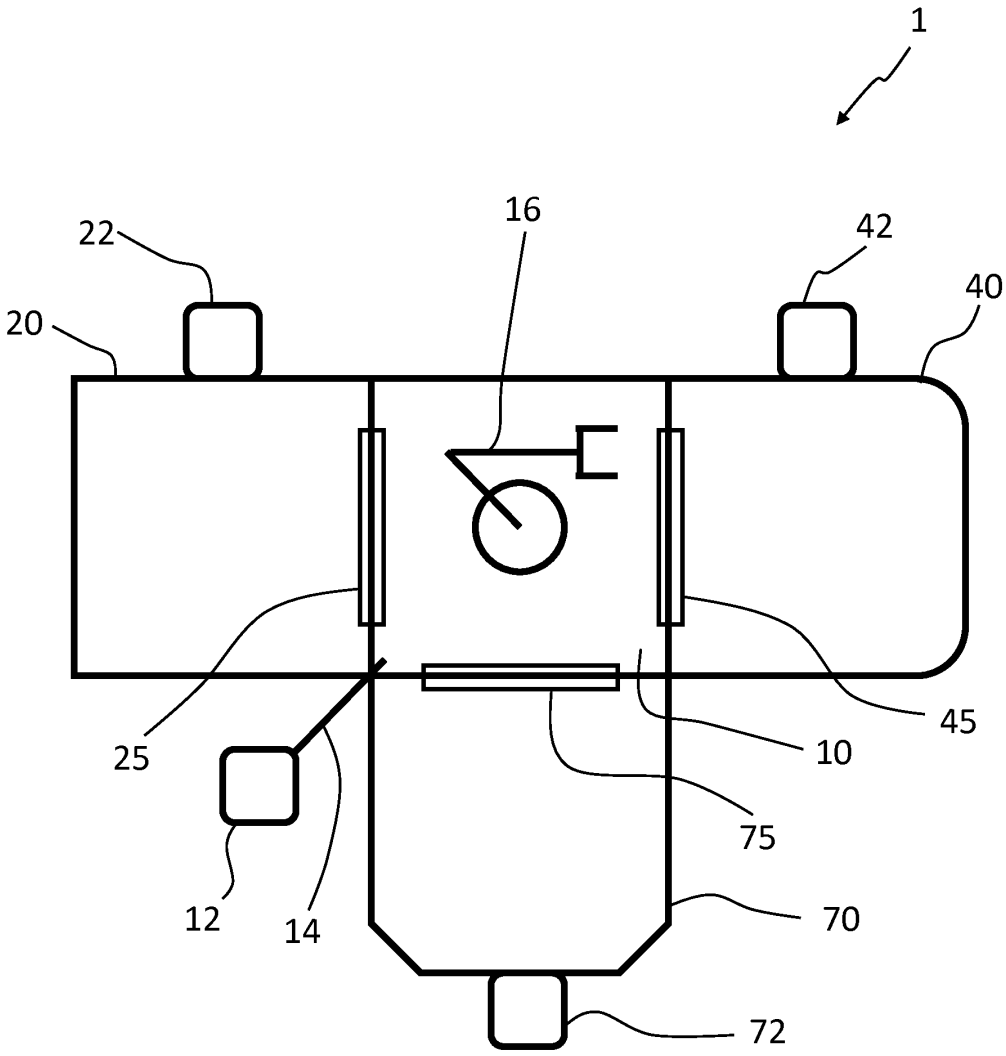

Fig.5

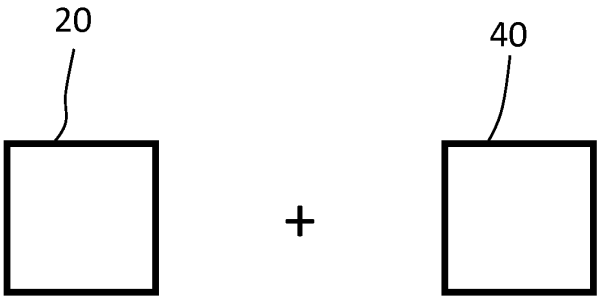
20
40
+

Fig. 6

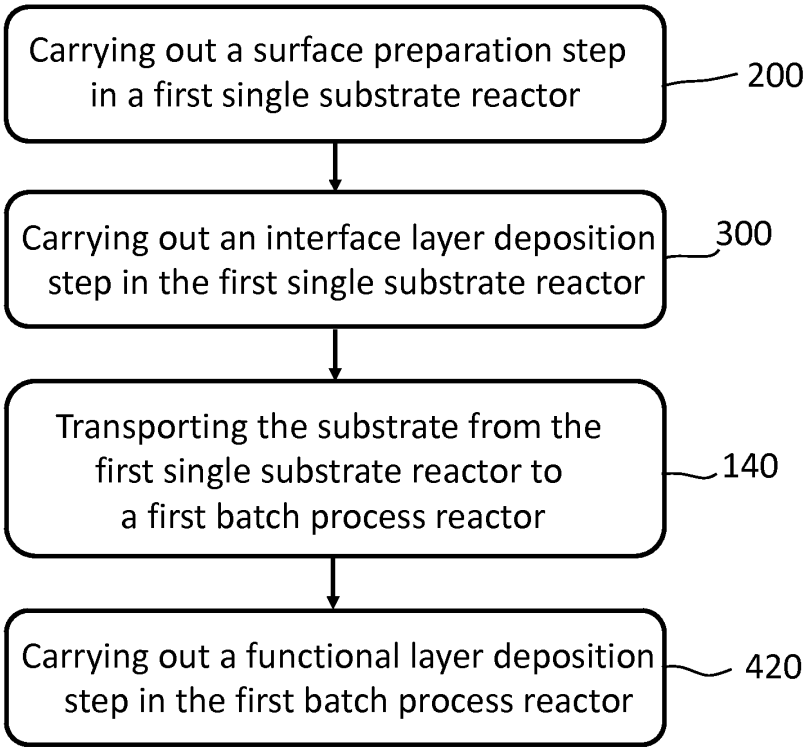
Carrying out a surface preparation step in a first single substrate reactor
200
Carrying out an interface layer deposition step in the first single substrate reactor
300
Transporting the substrate from the first single substrate reactor to a first batch process reactor
140
Carrying out a functional layer deposition step in the first batch process reactor
420

Fig. 7

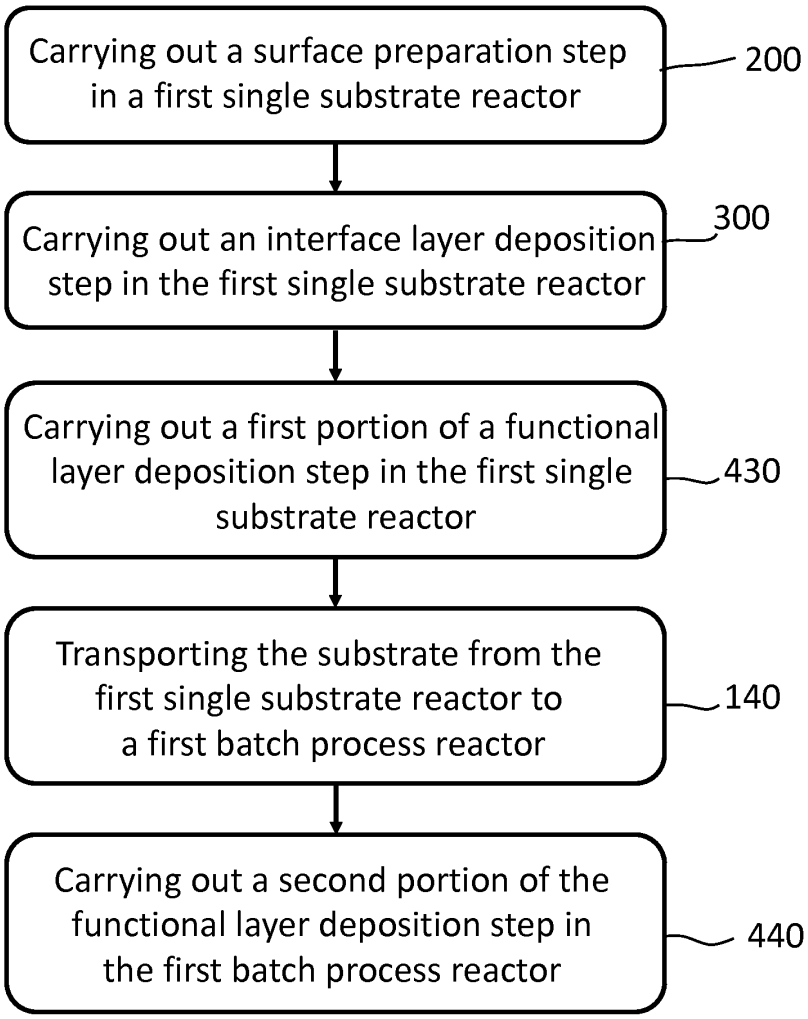
Carrying out a surface preparation step in a first single substrate reactor
200
Carrying out an interface layer deposition step in the first single substrate reactor
300
Carrying out a first portion of a functional layer deposition step in the first single substrate reactor
430
Transporting the substrate from the first single substrate reactor to a first batch process reactor
140
Carrying out a second portion of the functional layer deposition step in the first batch process reactor
440

Fig.8

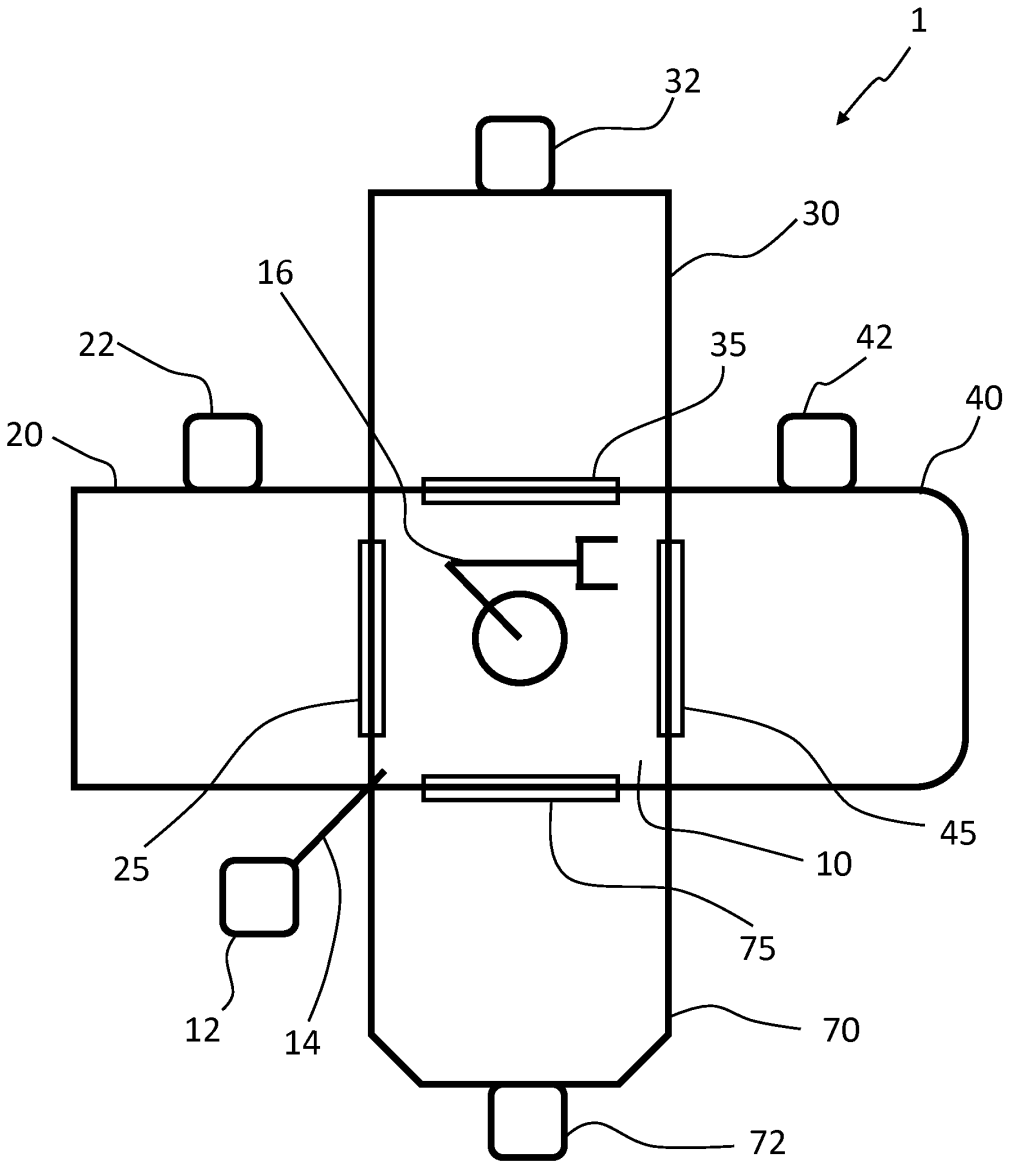

Fig.9

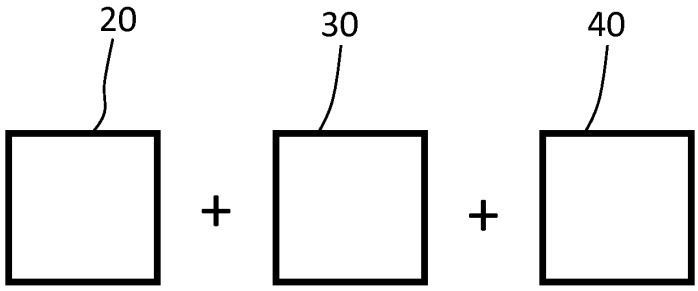

Fig.10

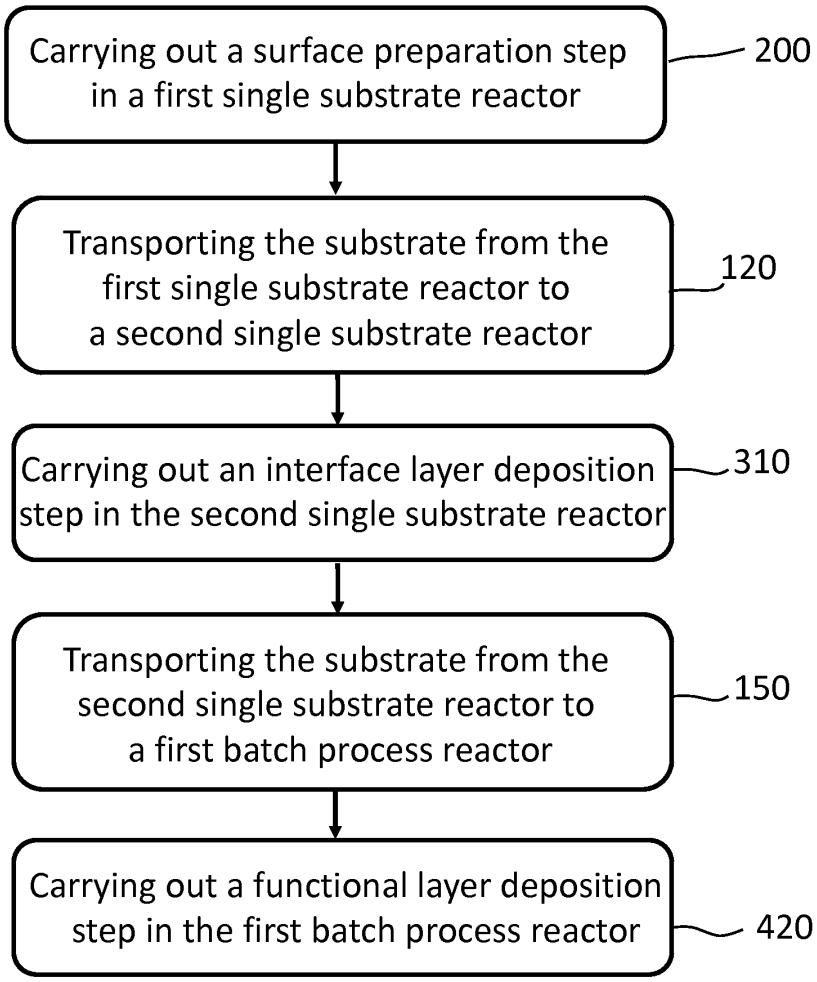
Carrying out a surface preparation step in a first single substrate reactor
200
Transporting the substrate from the first single substrate reactor to a second single substrate reactor
120
Carrying out an interface layer deposition step in the second single substrate reactor
310
Transporting the substrate from the second single substrate reactor to a first batch process reactor
150
Carrying out a functional layer deposition step in the first batch process reactor
420

Fig.11

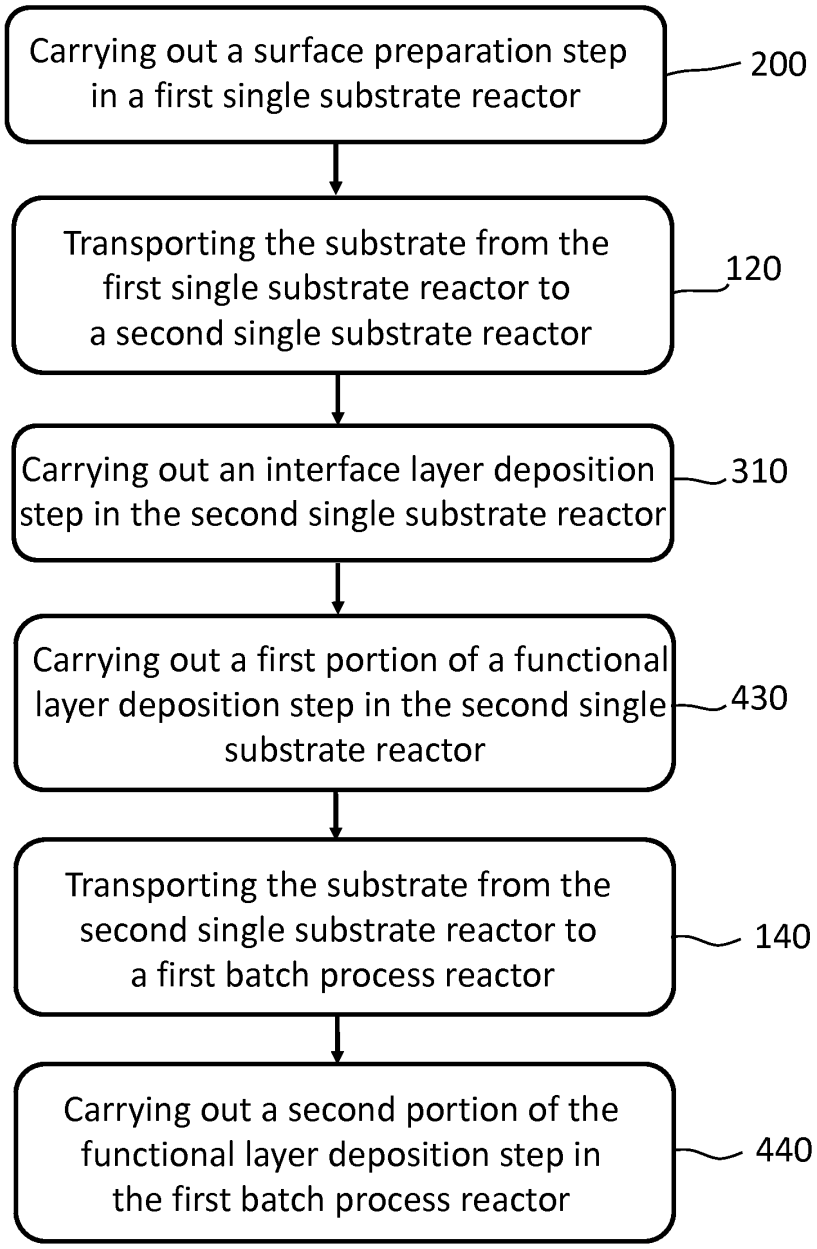
Carrying out a surface preparation step in a first single substrate reactor
200
Transporting the substrate from the first single substrate reactor to a second single substrate reactor
120
Carrying out an interface layer deposition step in the second single substrate reactor
310
Carrying out a first portion of a functional layer deposition step in the second single substrate reactor
430
Transporting the substrate from the second single substrate reactor to a first batch process reactor
140
Carrying out a second portion of the functional layer deposition step in the first batch process reactor
440

Fig.12

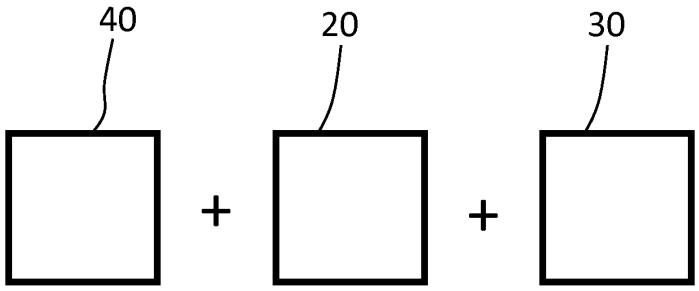

Fig.13

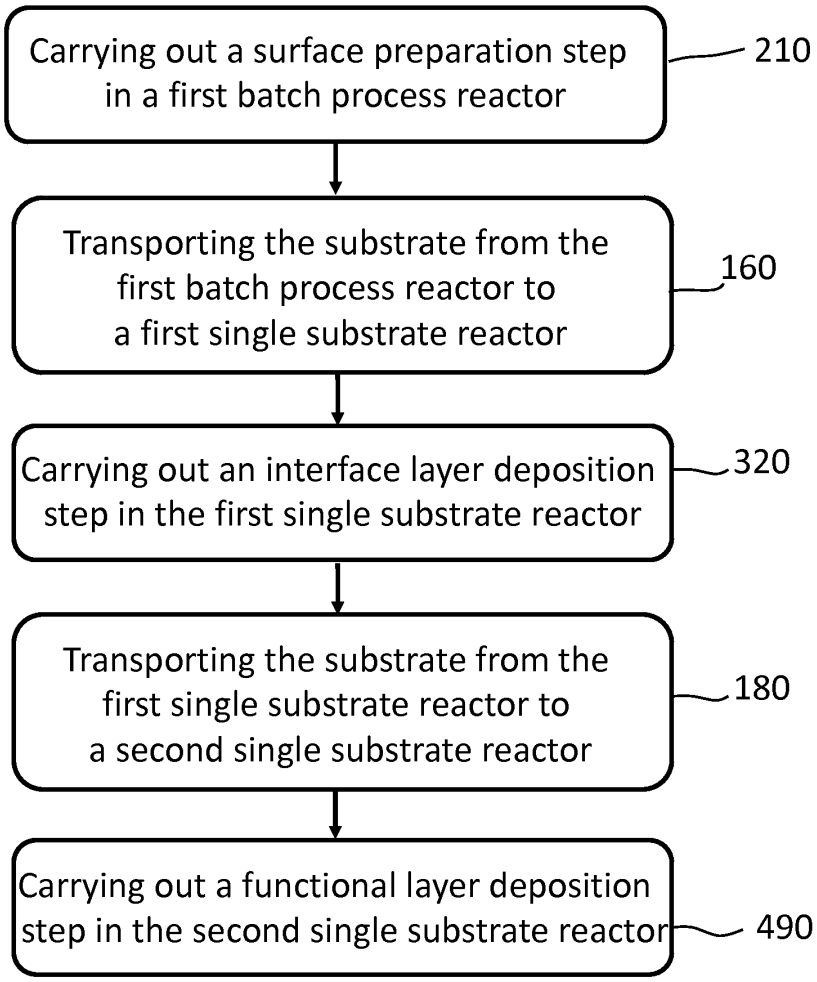
Carrying out a surface preparation step in a first batch process reactor
210
Transporting the substrate from the first batch process reactor to a first single substrate reactor
160
Carrying out an interface layer deposition step in the first single substrate reactor
320
Transporting the substrate from the first single substrate reactor to a second single substrate reactor
180
Carrying out a functional layer deposition step in the second single substrate reactor
490

Fig.14

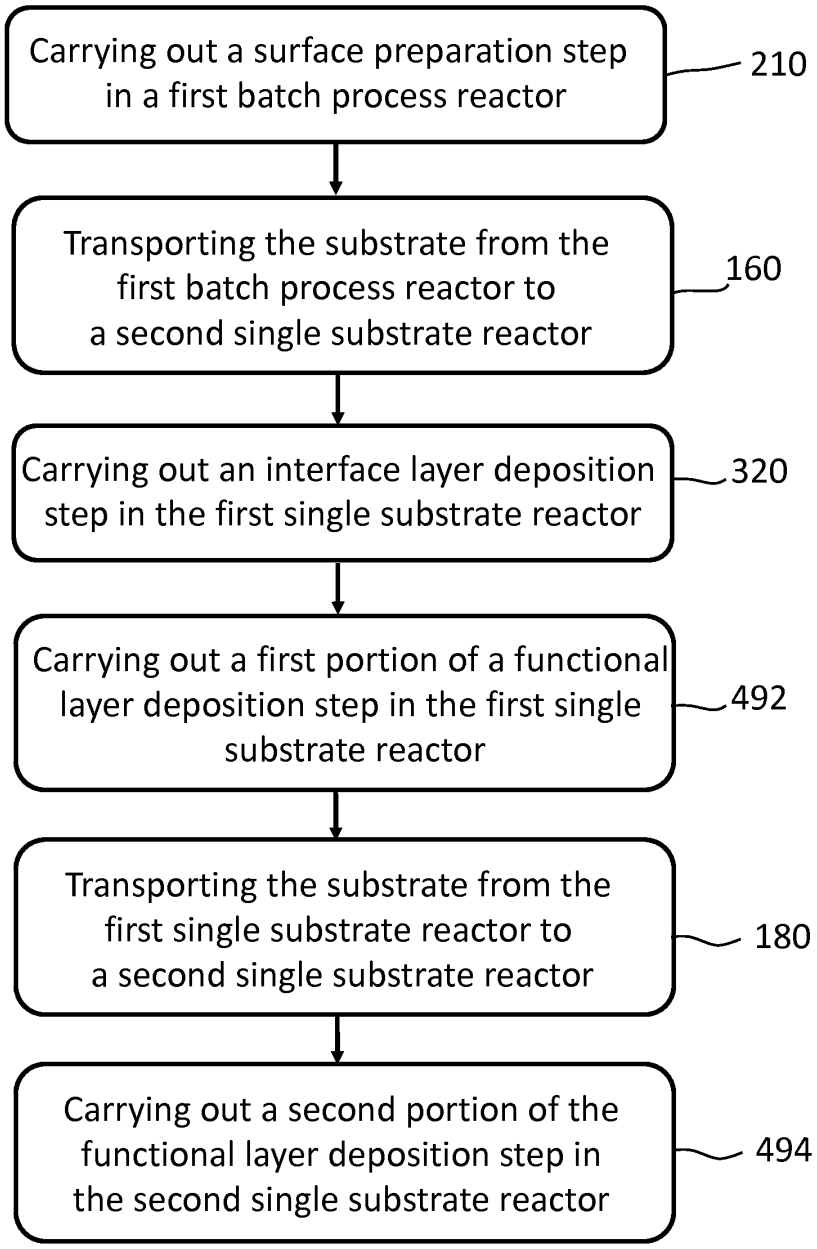
Carrying out a surface preparation step in a first batch process reactor
210
Transporting the substrate from the first batch process reactor to a second single substrate reactor
160
Carrying out an interface layer deposition step in the first single substrate reactor
320
Carrying out a first portion of a functional layer deposition step in the first single substrate reactor
492
Transporting the substrate from the first single substrate reactor to a second single substrate reactor
180
Carrying out a second portion of the functional layer deposition step in the second single substrate reactor
494

Fig.15

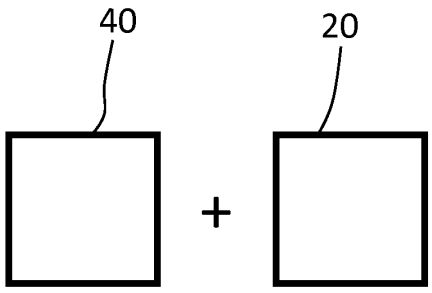

Fig.16

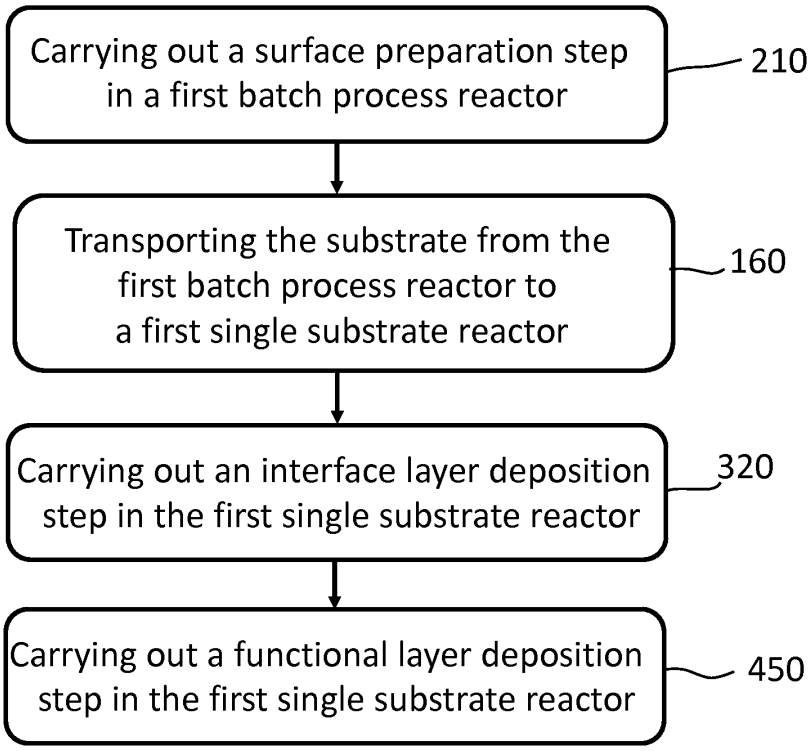
Carrying out a surface preparation step in a first batch process reactor
210
Transporting the substrate from the first batch process reactor to a first single substrate reactor
160
Carrying out an interface layer deposition step in the first single substrate reactor
320
Carrying out a functional layer deposition step in the first single substrate reactor
450

Fig. 17

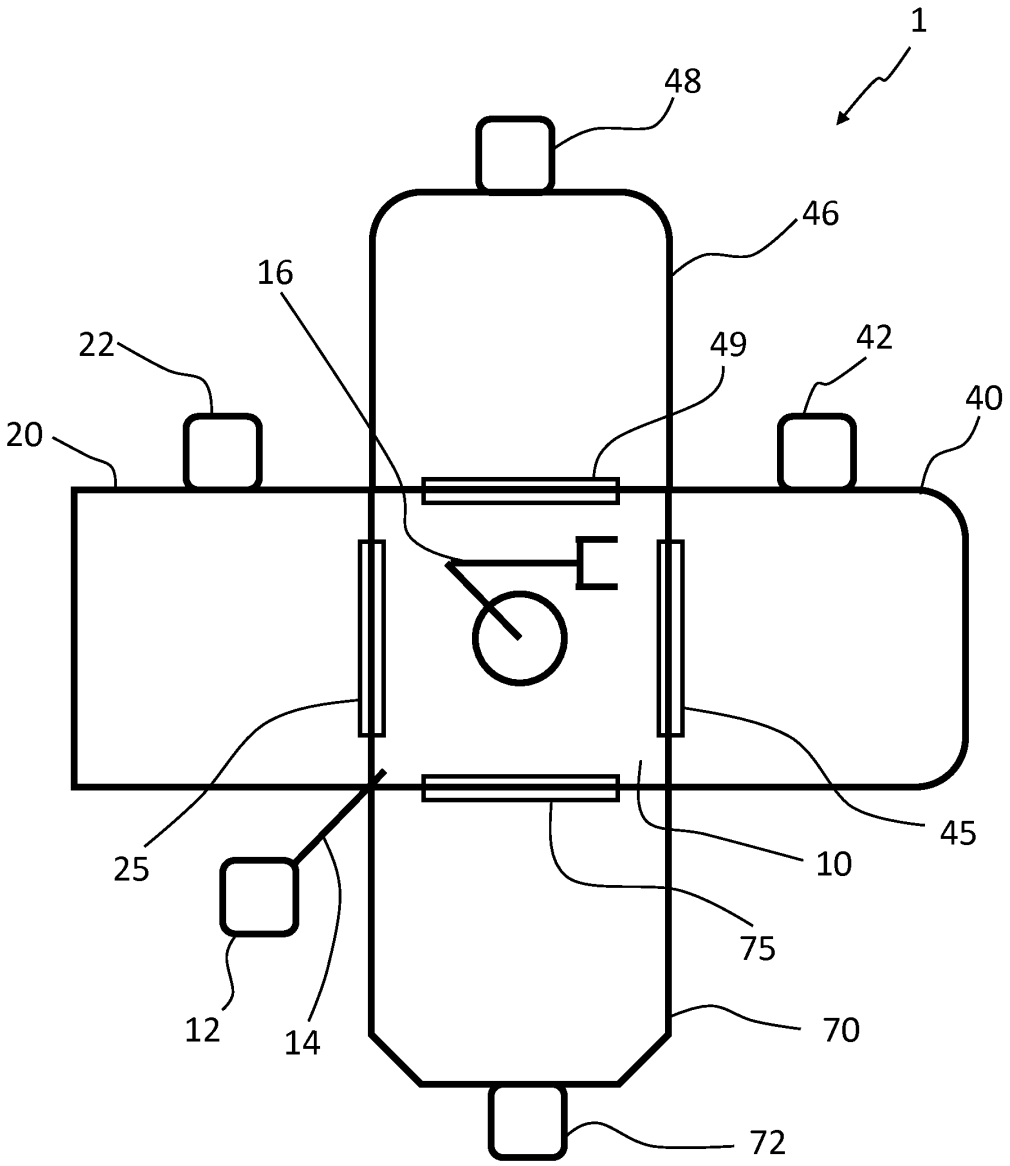

Fig.18

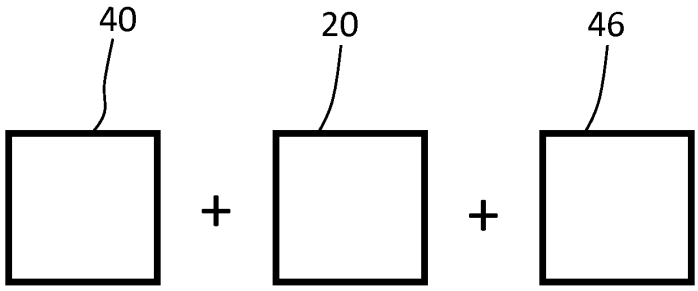

Fig.19

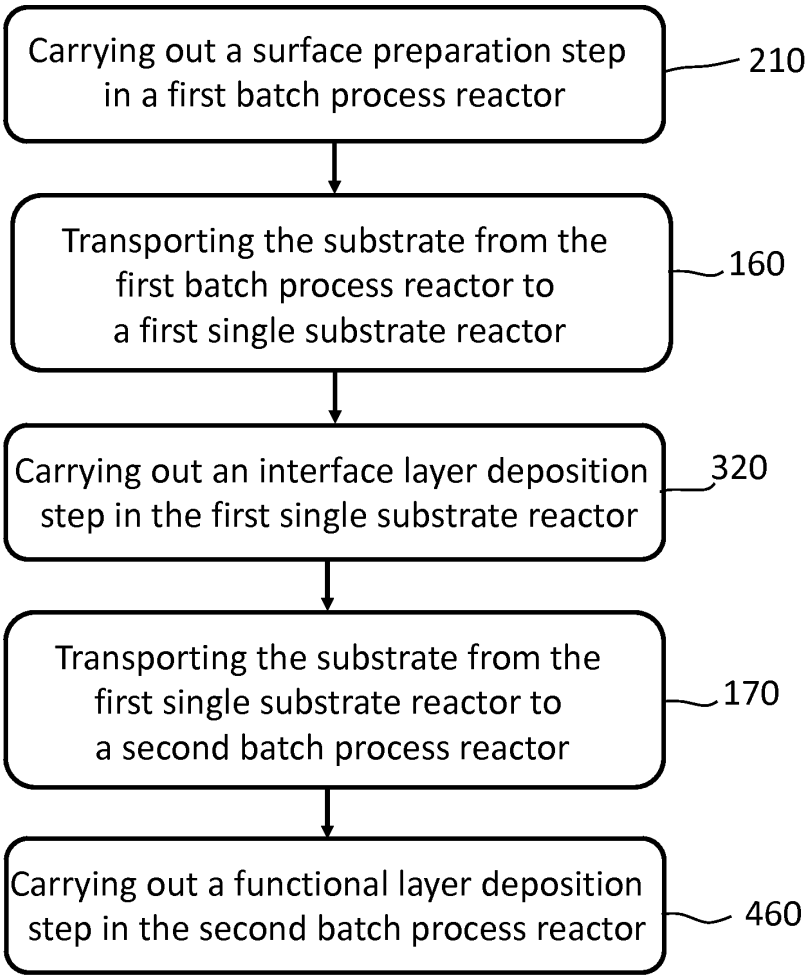
Carrying out a surface preparation step in a first batch process reactor
210
Transporting the substrate from the first batch process reactor to a first single substrate reactor
160
Carrying out an interface layer deposition step in the first single substrate reactor
320
Transporting the substrate from the first single substrate reactor to a second batch process reactor
170
Carrying out a functional layer deposition step in the second batch process reactor
460

Fig. 20

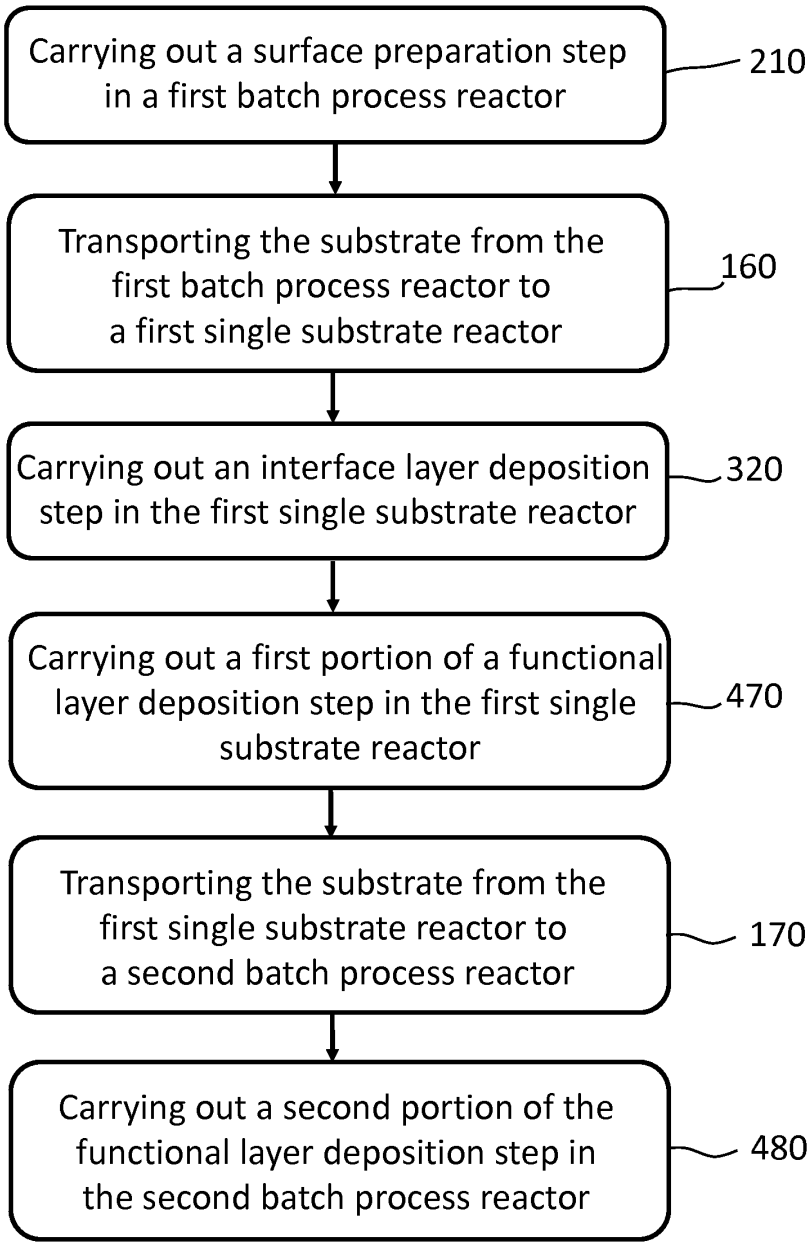
Carrying out a surface preparation step in a first batch process reactor
210
Transporting the substrate from the first batch process reactor to a first single substrate reactor
160
Carrying out an interface layer deposition step in the first single substrate reactor
320
Carrying out a first portion of a functional layer deposition step in the first single substrate reactor
470
Transporting the substrate from the first single substrate reactor to a second batch process reactor
170
Carrying out a second portion of the functional layer deposition step in the second batch process reactor
480

Fig. 21

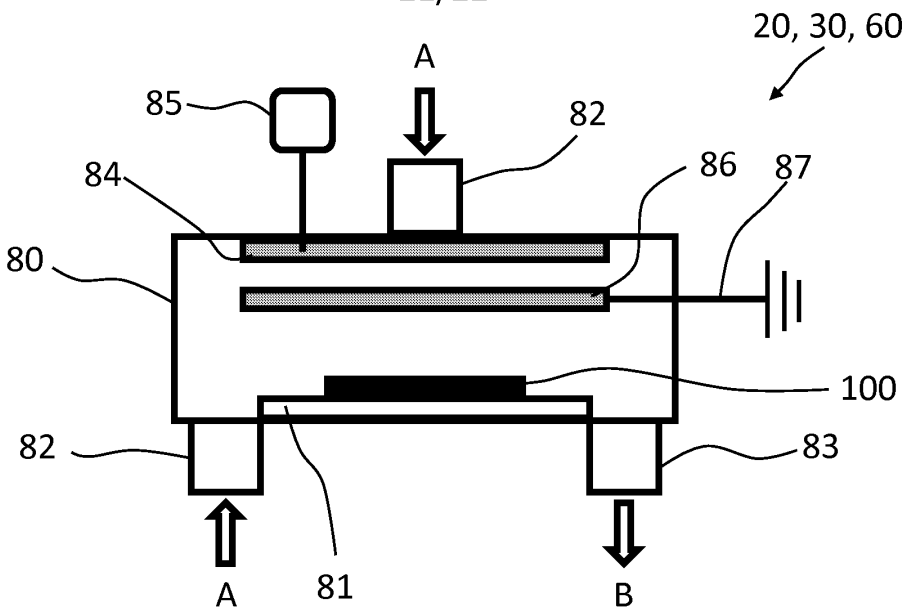
20, 30, 60
A
85
82
84
86
87
80
100
82
83
A
81
B

Fig.22

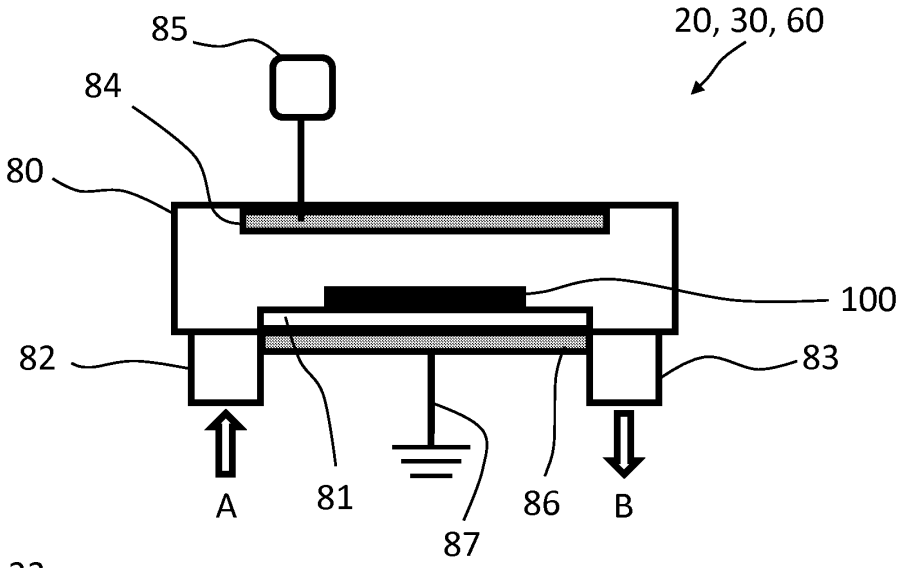
85
20, 30, 60
84
80
100
82
83
A
81
86
B
87

Fig. 23

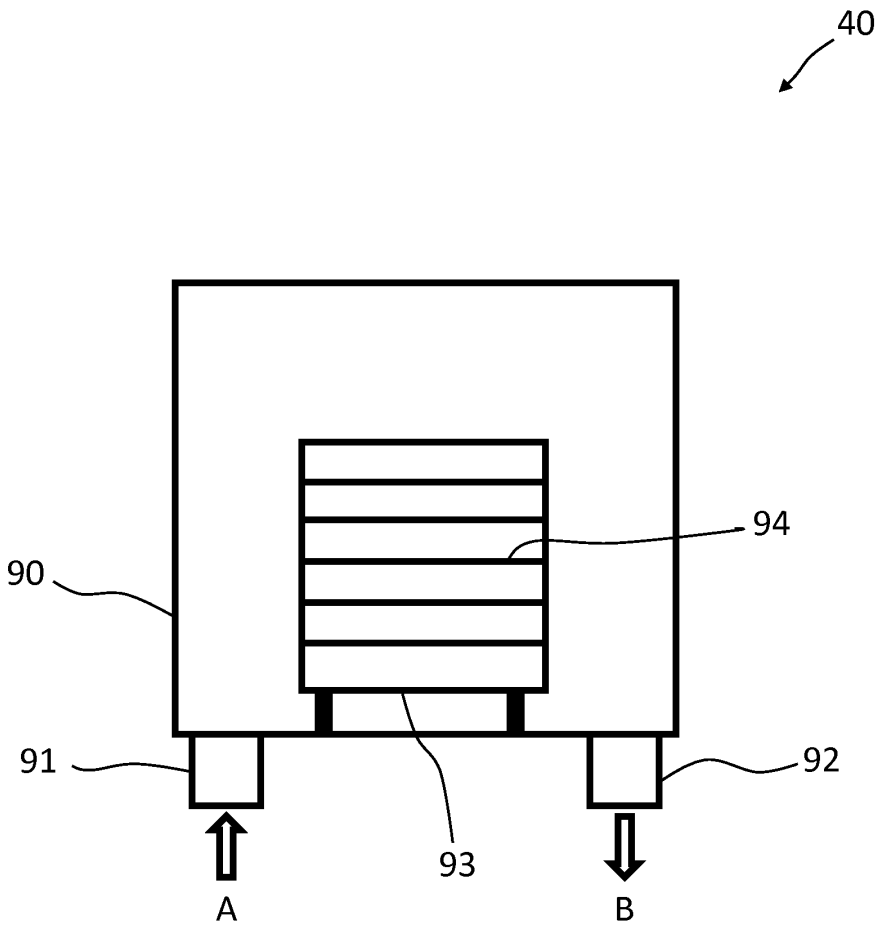

Fig. 24