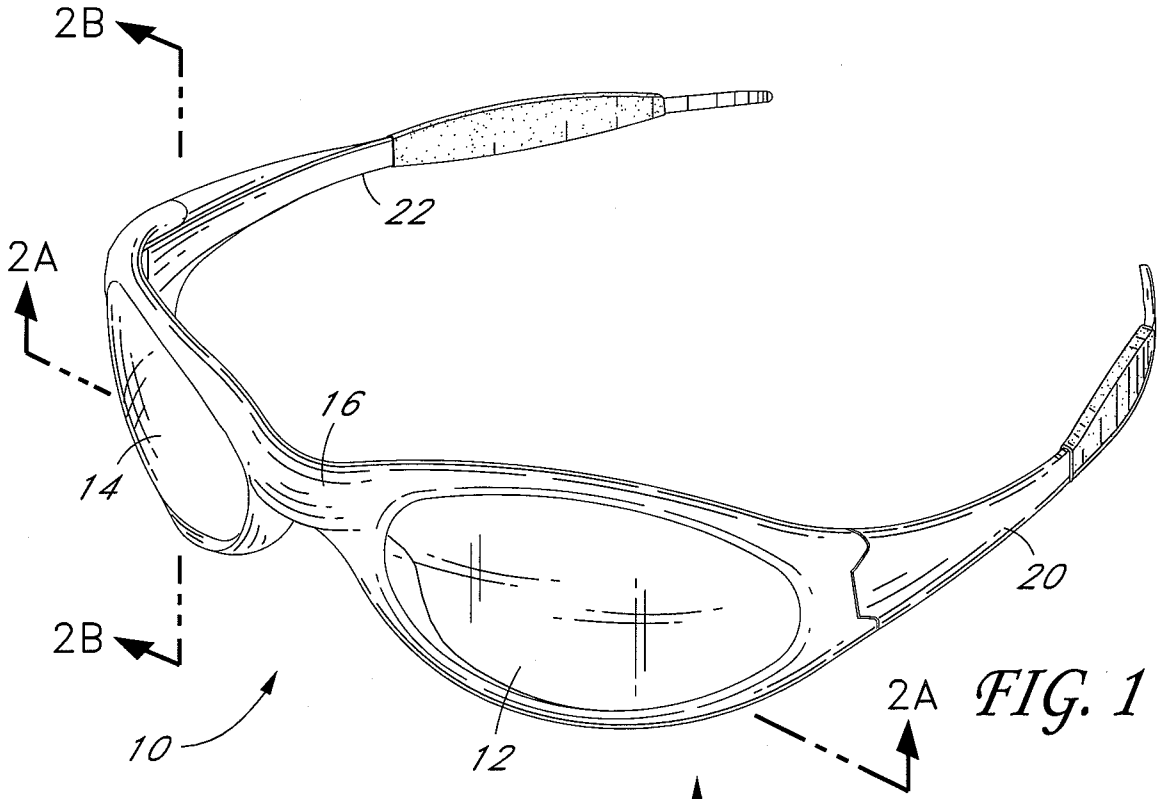

FIG. 1

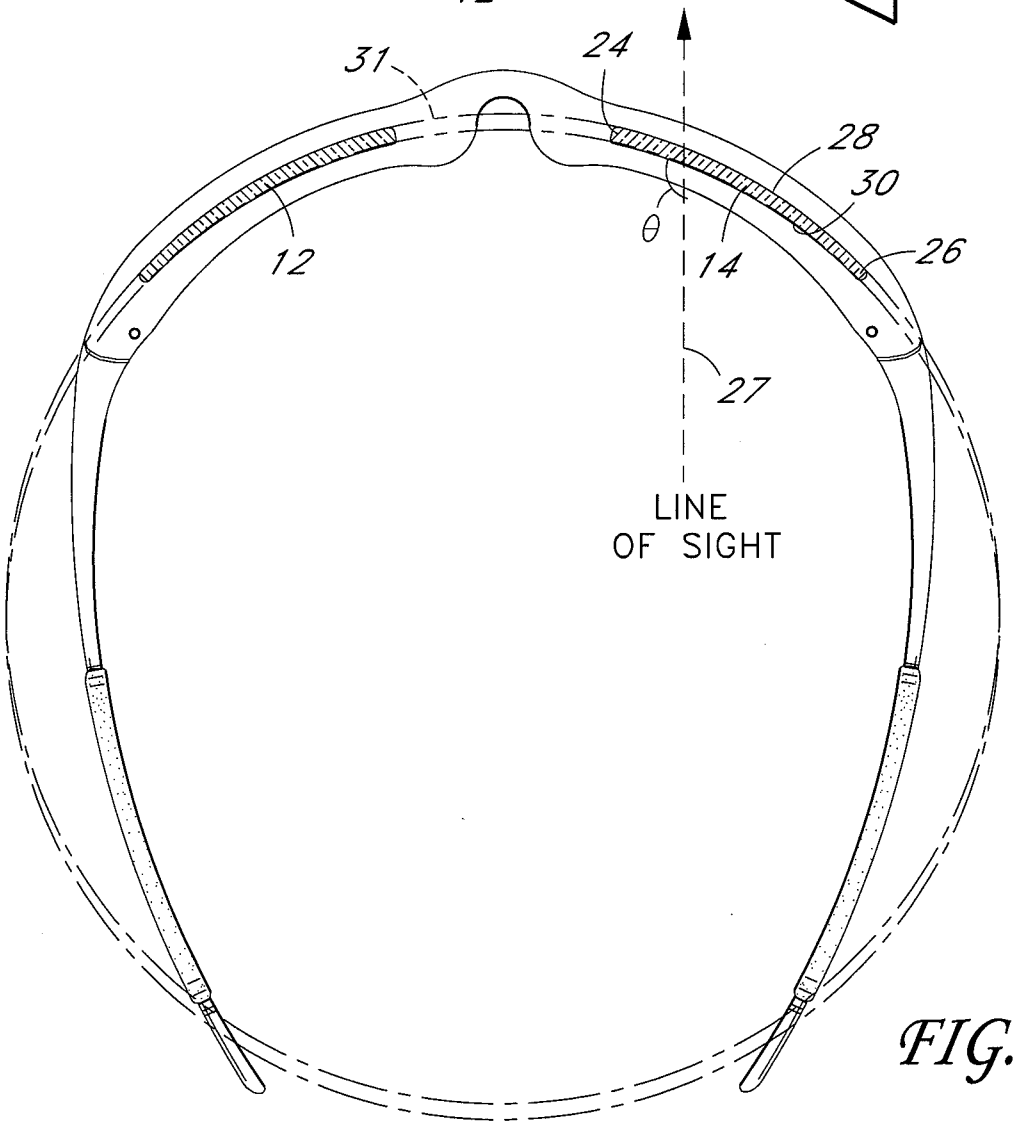

FIG. 2A

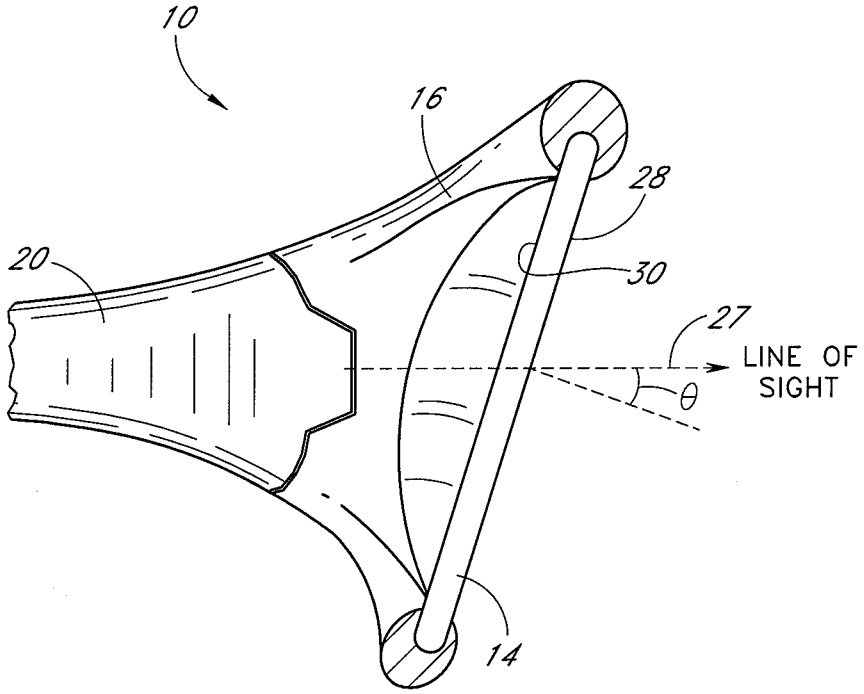

FIG. 2B

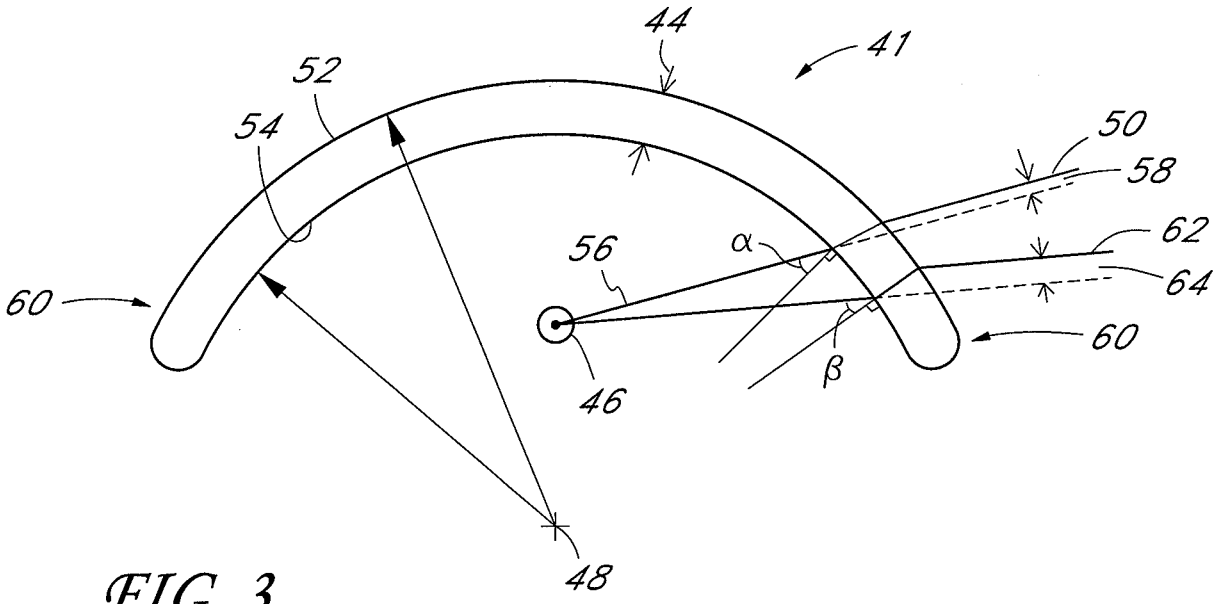
44
41
52
54
50
58
62
64
56
α
60
46
β
60
48

FIG. 3

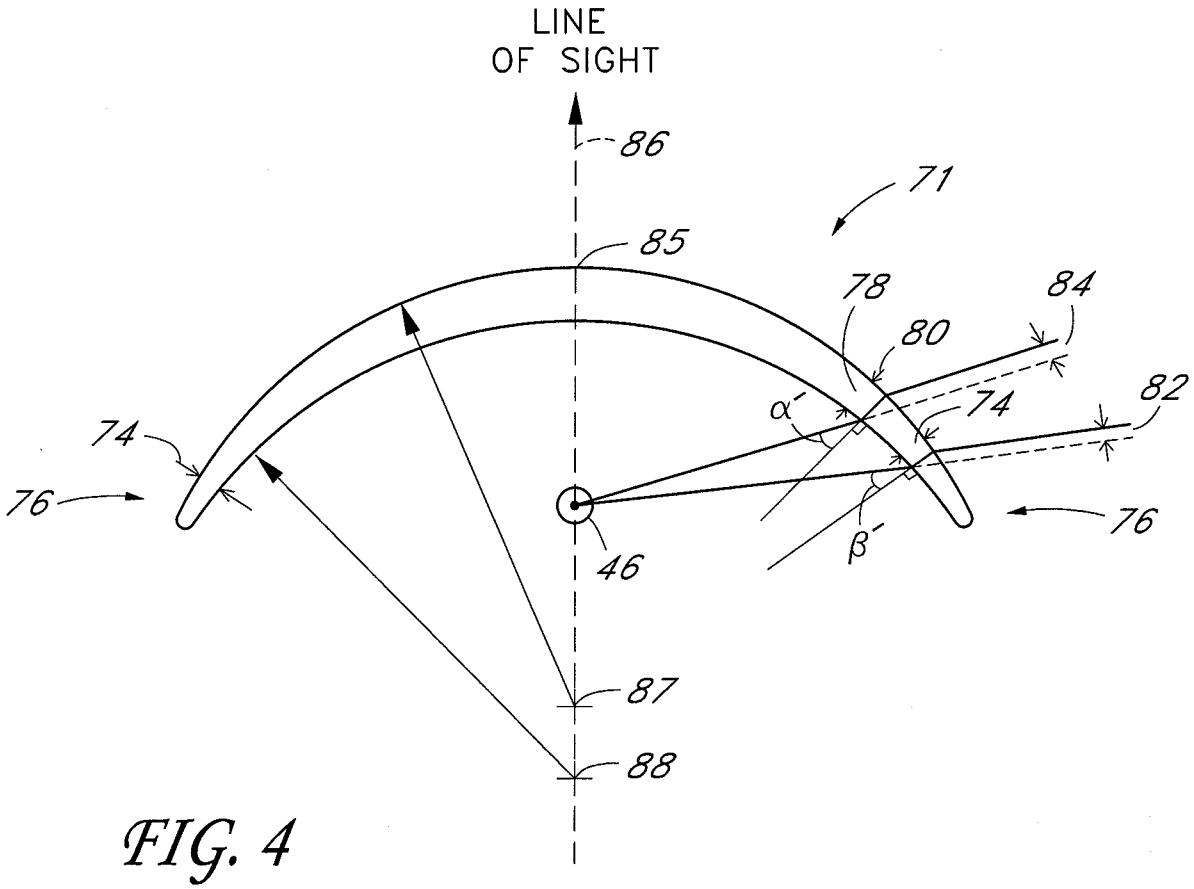
LINE
OF SIGHT
86
71
85
78
84
80
82
α'
74
74
76
β'
76
46
87
88

FIG. 4

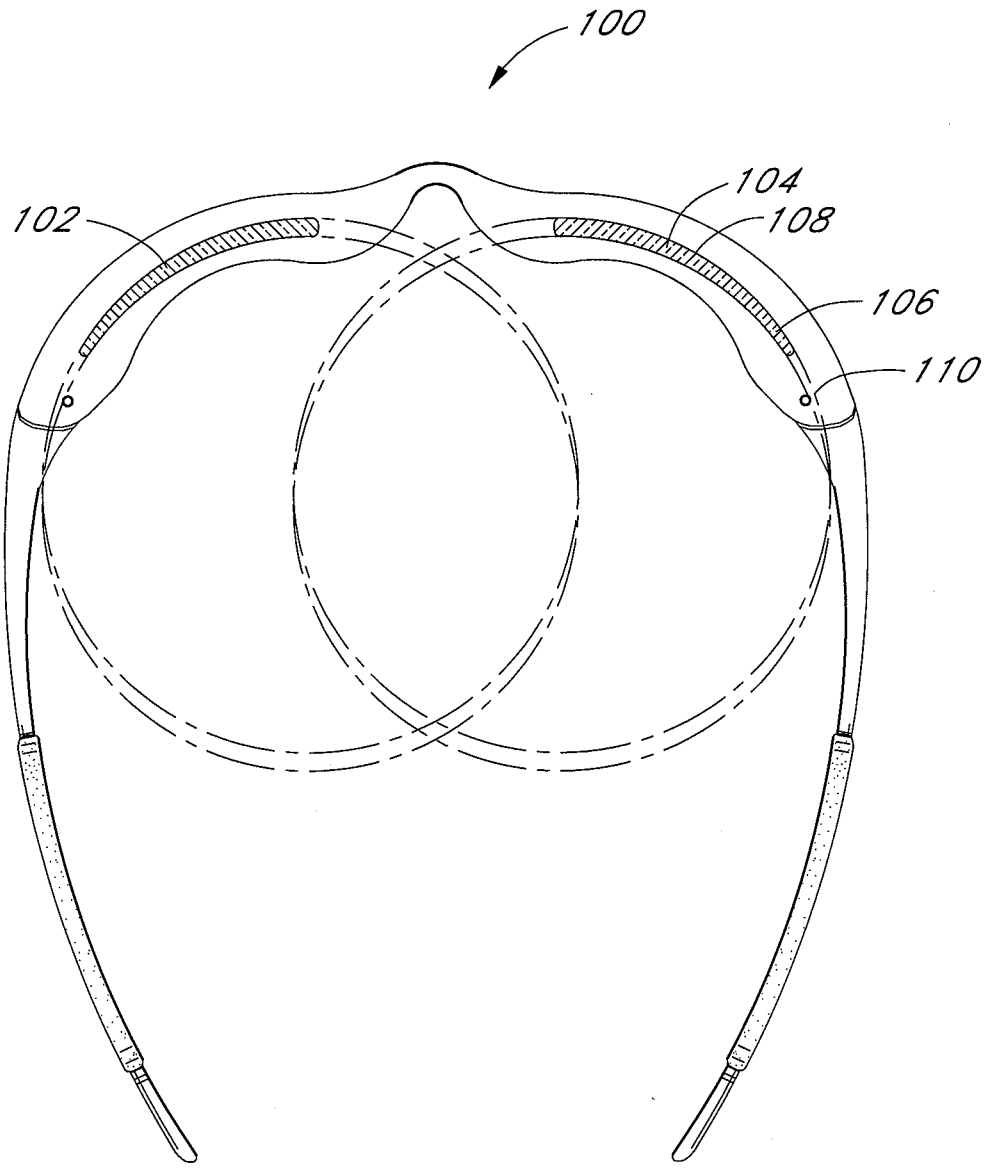

FIG. 5

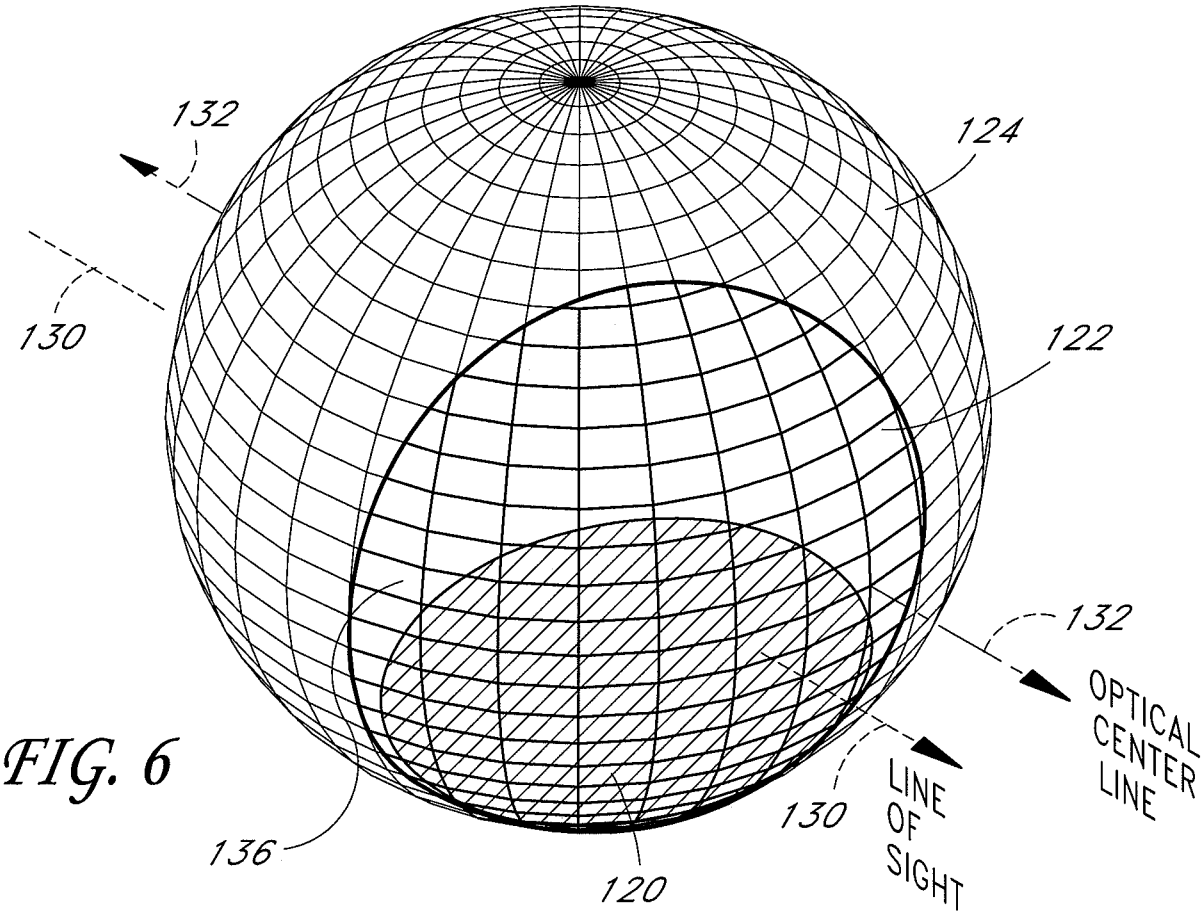
132
124
130
122
132
OPTICAL CENTER LINE
LINE OF SIGHT
130
136
120

FIG. 6

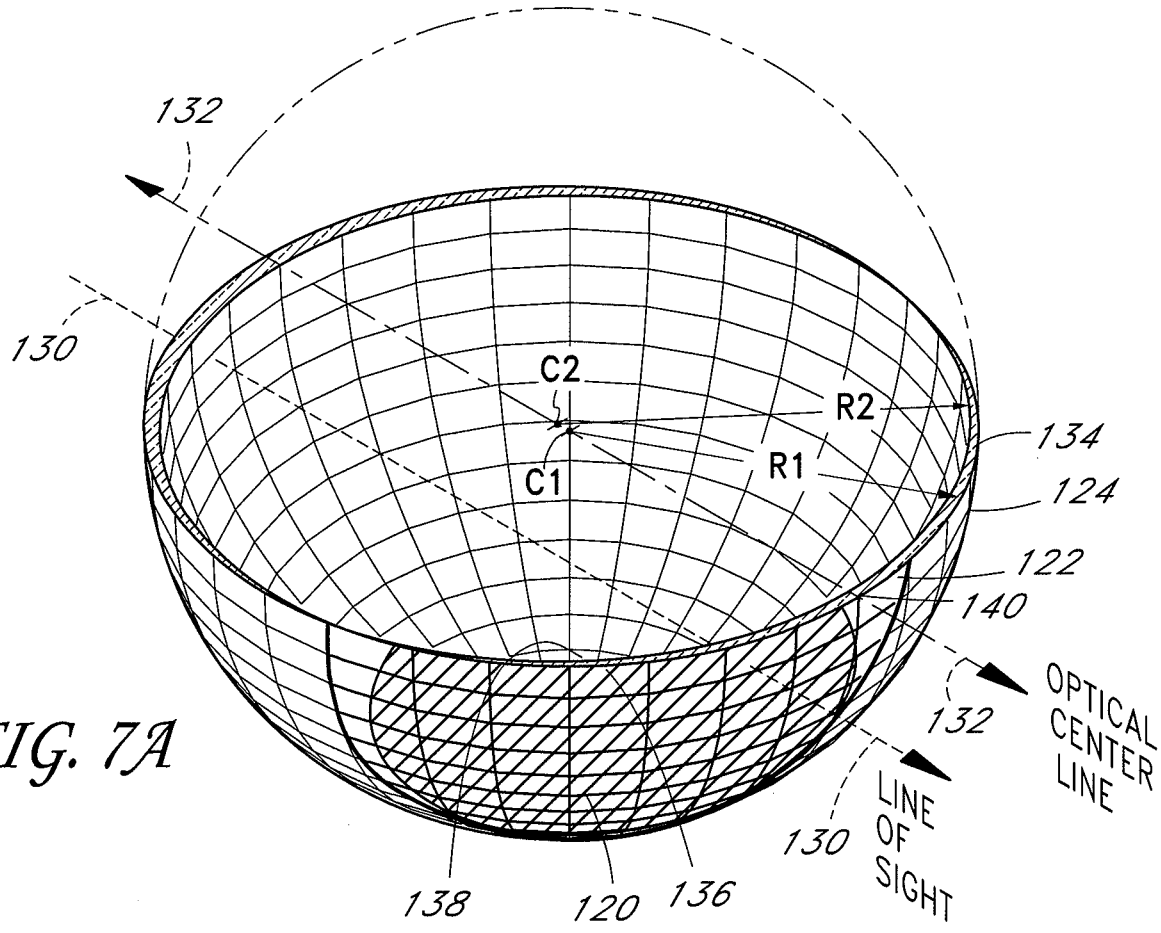
132
130
C2
R2
134
C1
R1
124
122
140
132
OPTICAL CENTER LINE
LINE OF SIGHT
130
138
120
136

FIG. 7A

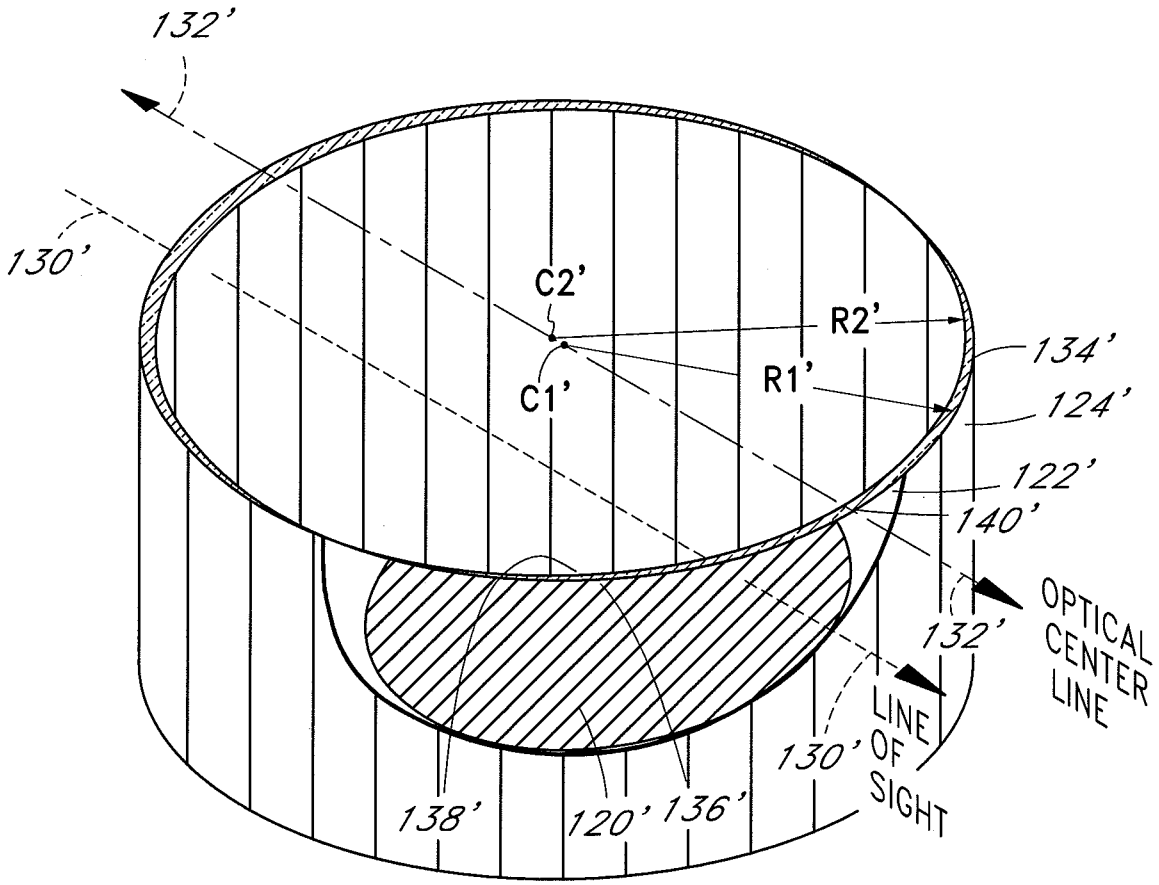
132'
130'
C2'
R2'
134'
C1'
R1'
124'
122'
140'
OPTICAL CENTER LINE
132'
LINE OF SIGHT
130'
138'
120'
136'

FIG. 7B

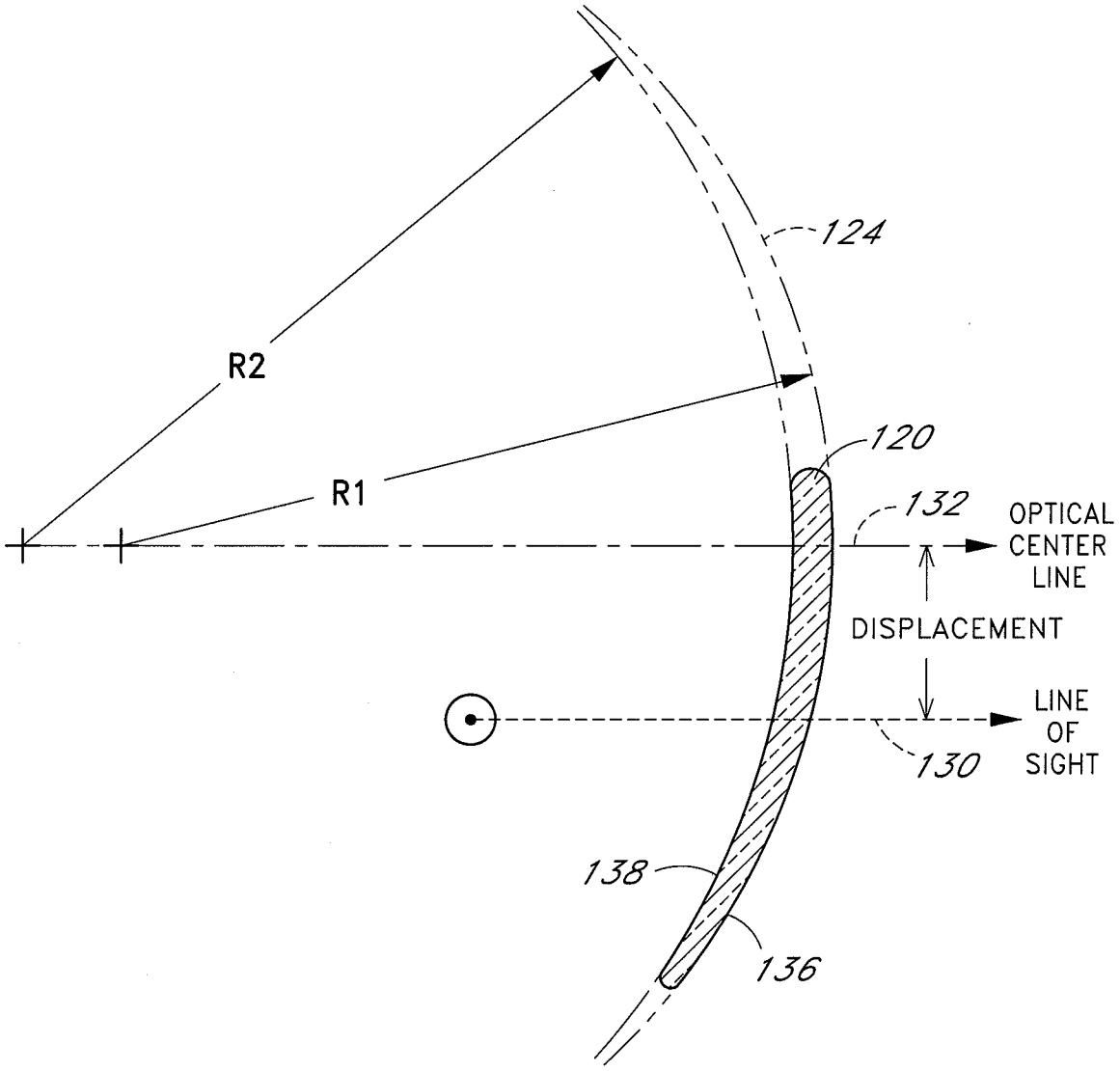
124
R2
R1
120
132
OPTICAL
CENTER
LINE
DISPLACEMENT
LINE
OF
SIGHT
130
138
136

FIG. 8A

FIG. 8B

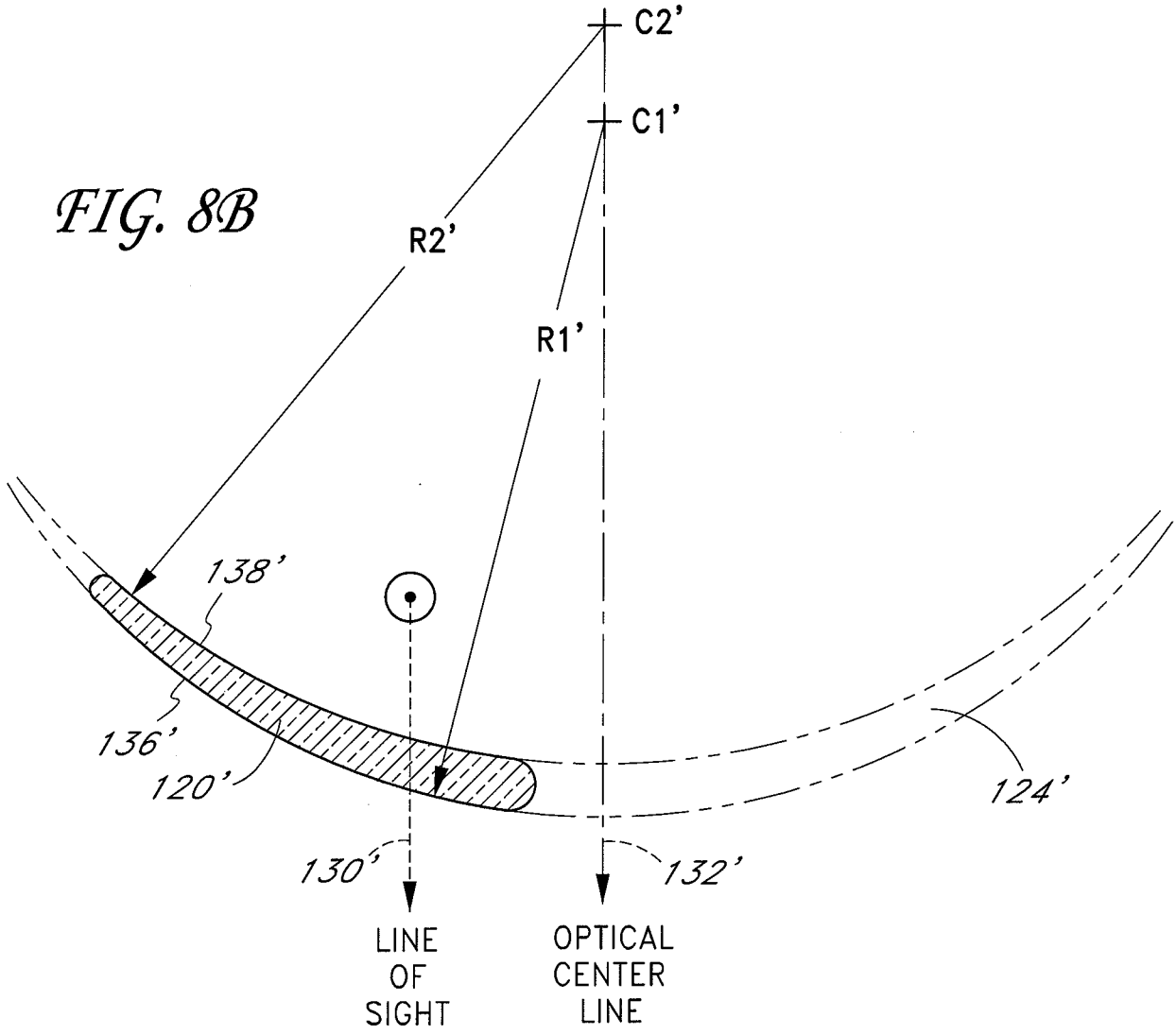
C2'
C1'
R2'
R1'
138'
136'
120'
124'
130'
132'
LINE OF SIGHT
OPTICAL CENTER LINE

FIG. 9

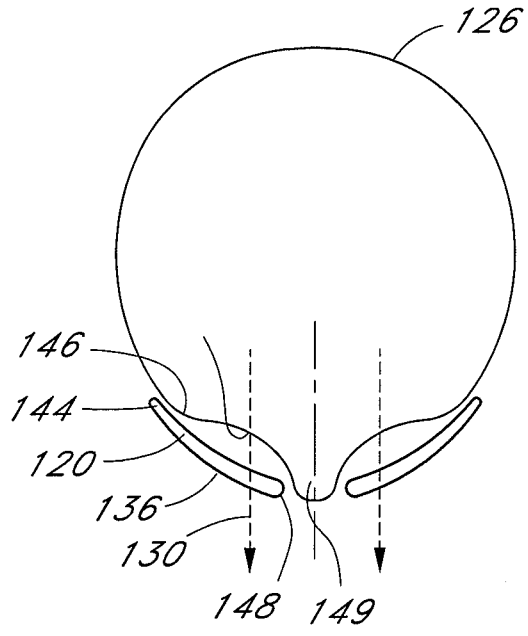
126
146
144
120
136
130
148
149

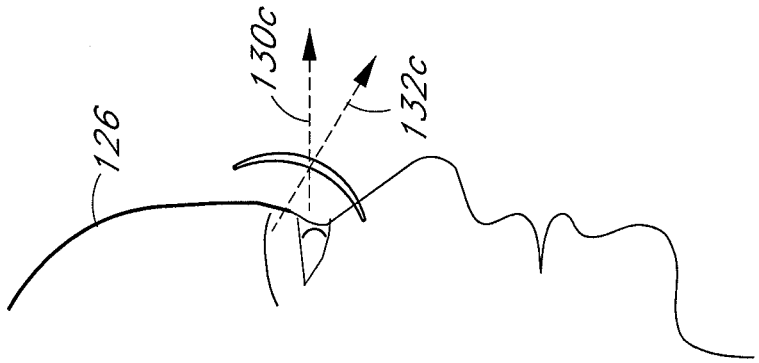

FIG. 10C

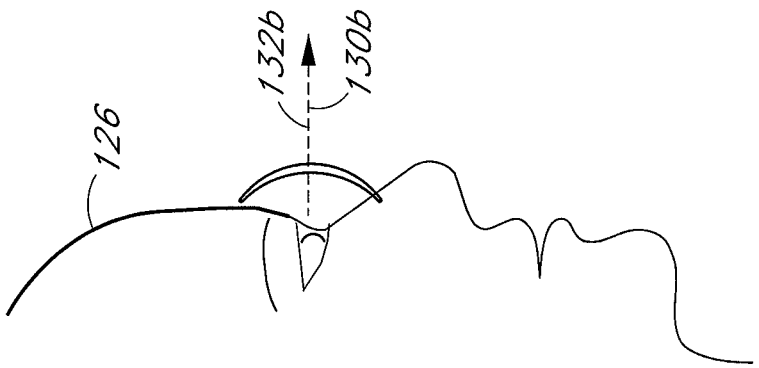

FIG. 10B

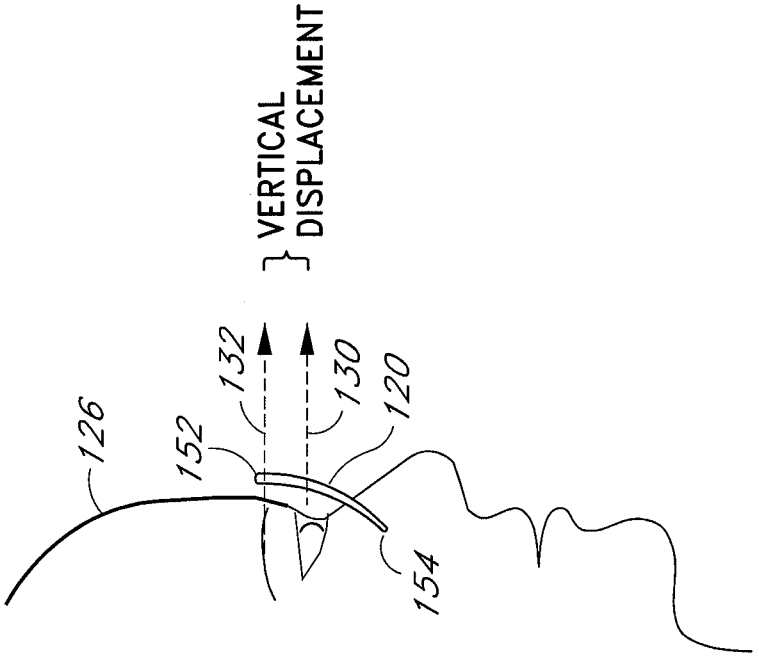

FIG. 10A

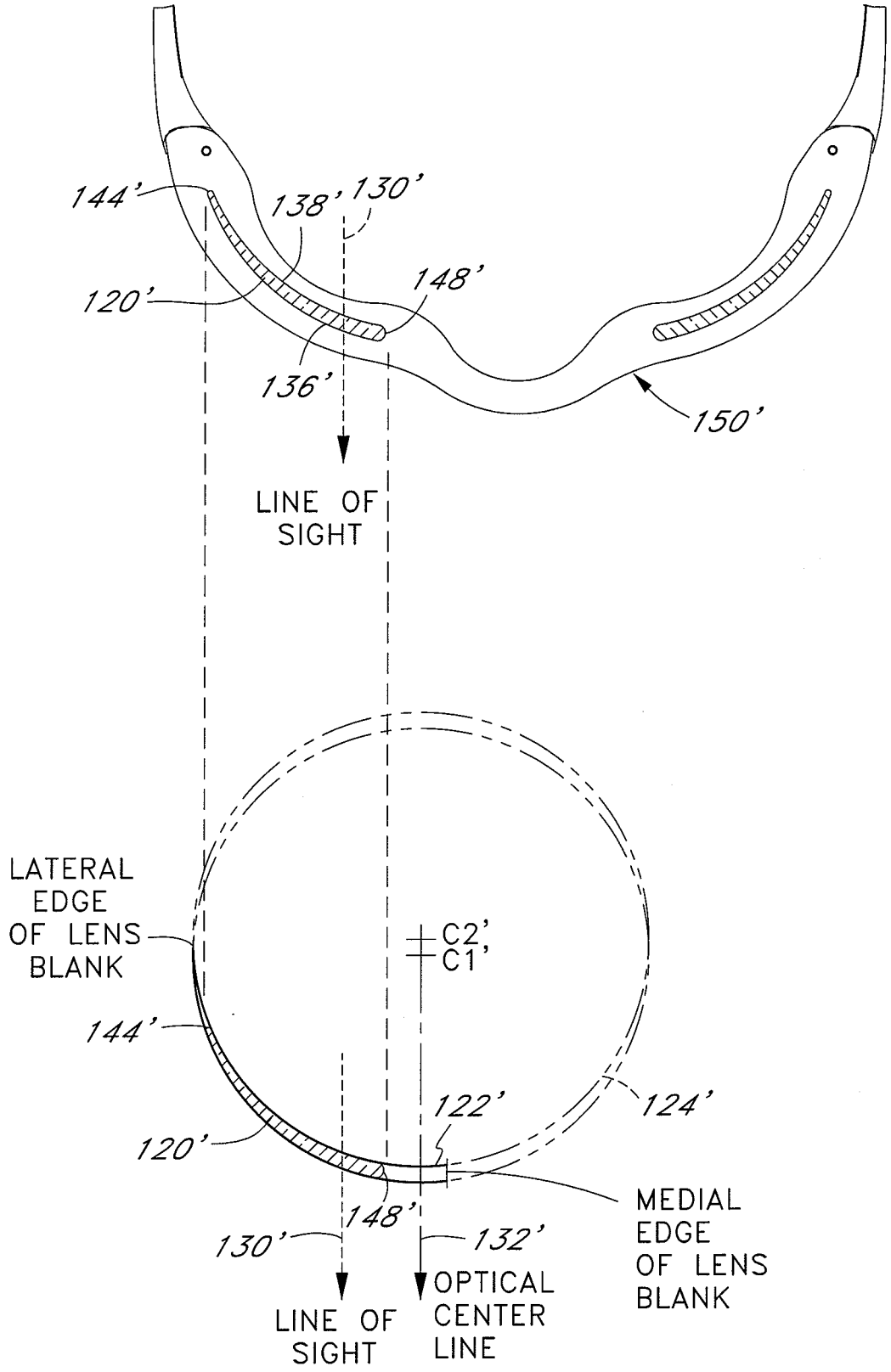
144'
138'
130'
148'
120'
136'
150'
LINE OF SIGHT
LATERAL EDGE OF LENS BLANK
C2'
C1'
144'
122'
124'
120'
148'
130'
132'
MEDIAL EDGE OF LENS BLANK
LINE OF SIGHT
OPTICAL CENTER LINE

FIG. 11

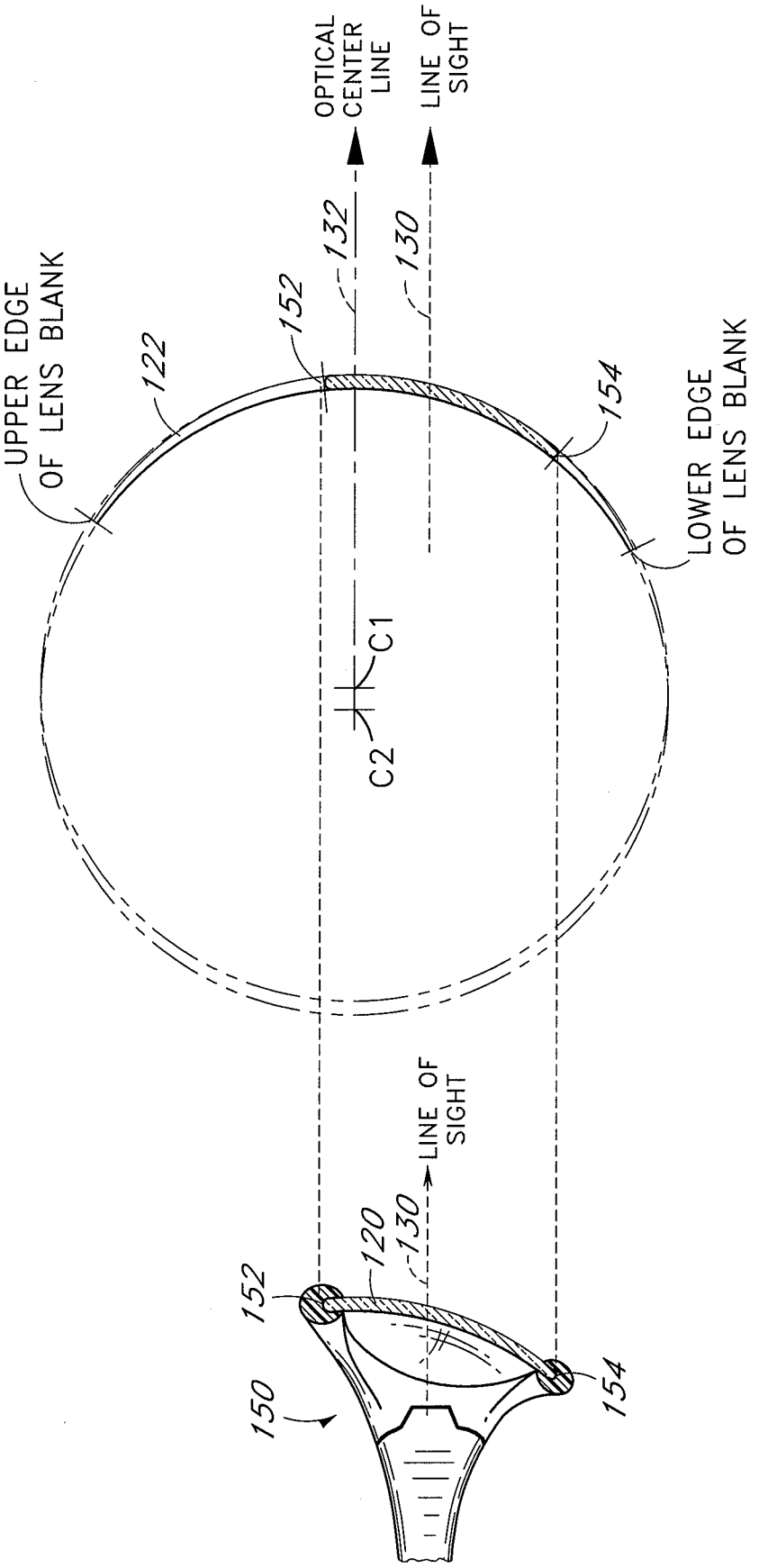
OPTICAL CENTER LINE
LINE OF SIGHT
UPPER EDGE OF LENS BLANK
LOWER EDGE OF LENS BLANK
132
130
152
122
154
C1
C2
LINE OF SIGHT
120
130
152
154
150

FIG. 11A

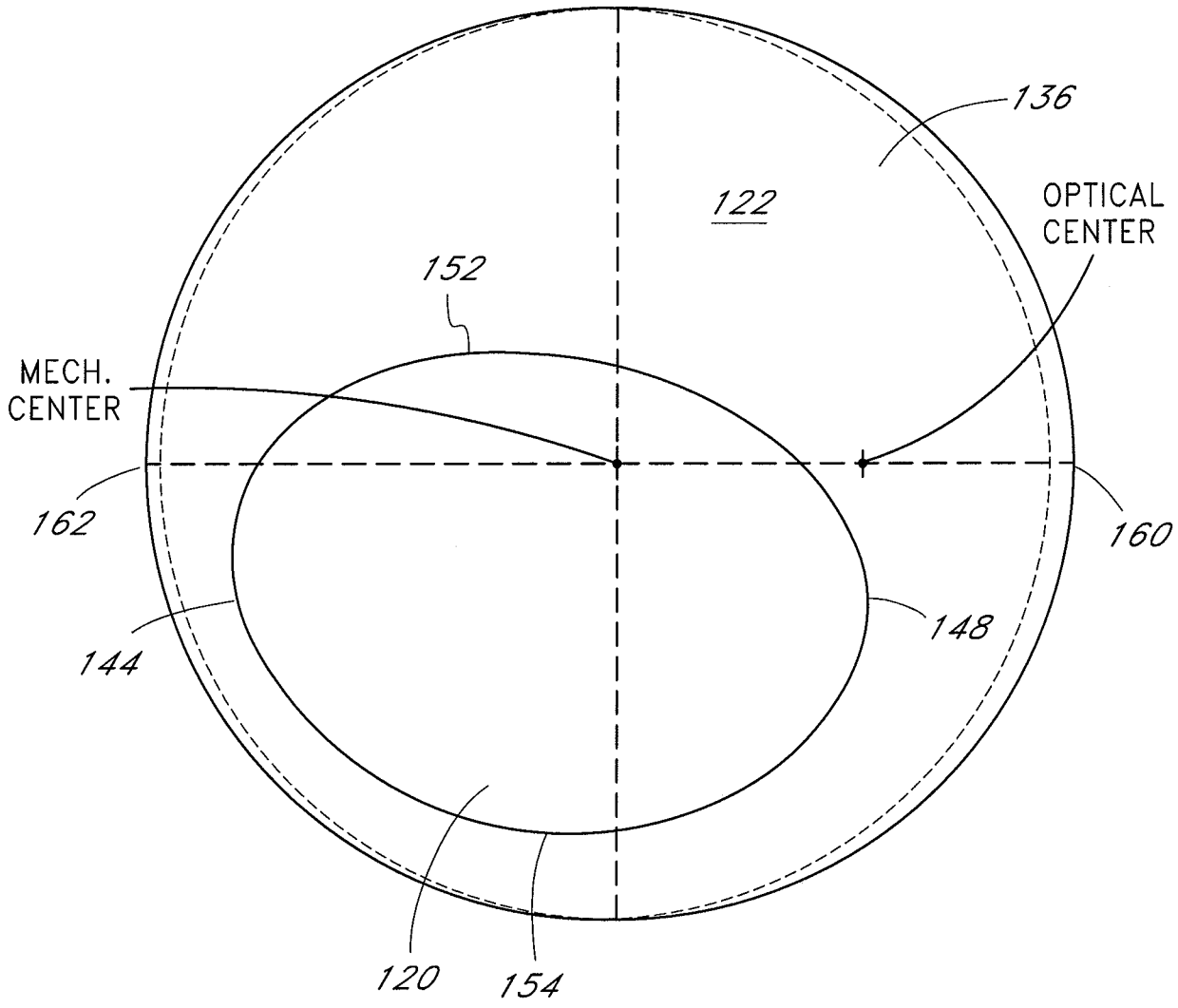
136
122
OPTICAL CENTER
152
MECH. CENTER
162
160
148
144
120
154

FIG. 12

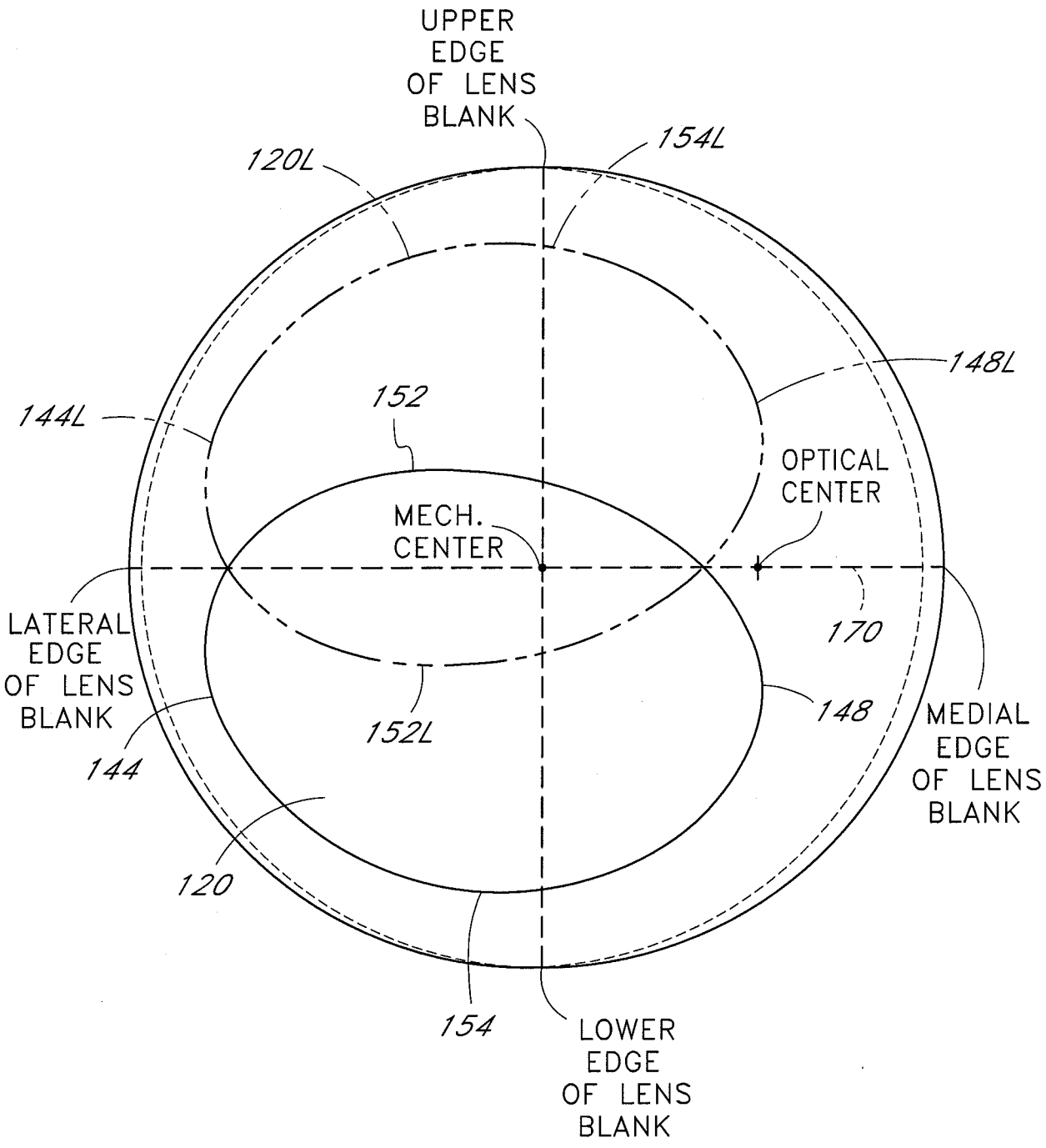
UPPER EDGE OF LENS BLANK
120L
154L
148L
144L
152
OPTICAL CENTER
MECH. CENTER
LATERAL EDGE OF LENS BLANK
170
152L
148
MEDIAL EDGE OF LENS BLANK
144
120
154
LOWER EDGE OF LENS BLANK

FIG. 12A

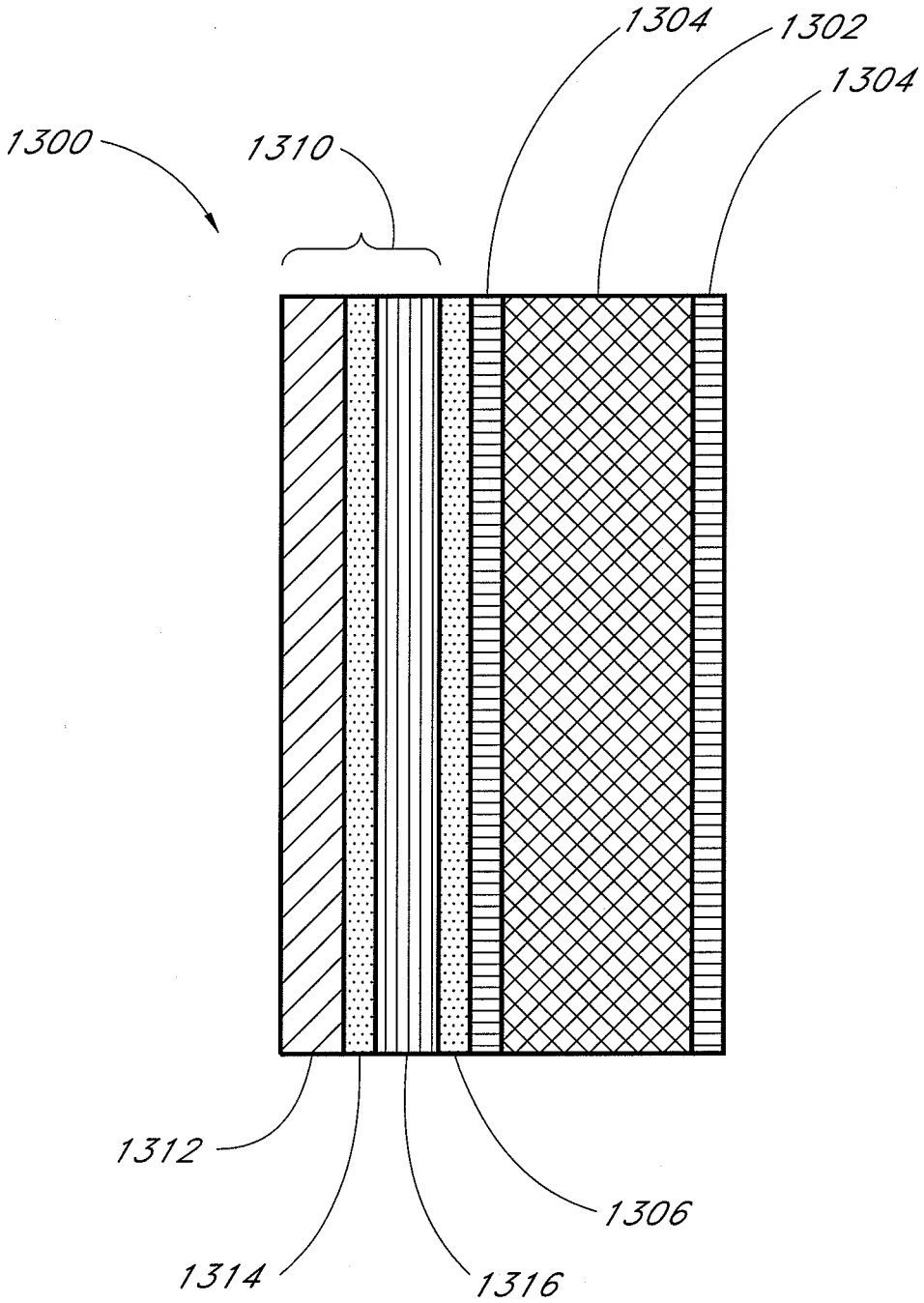

FIG. 13

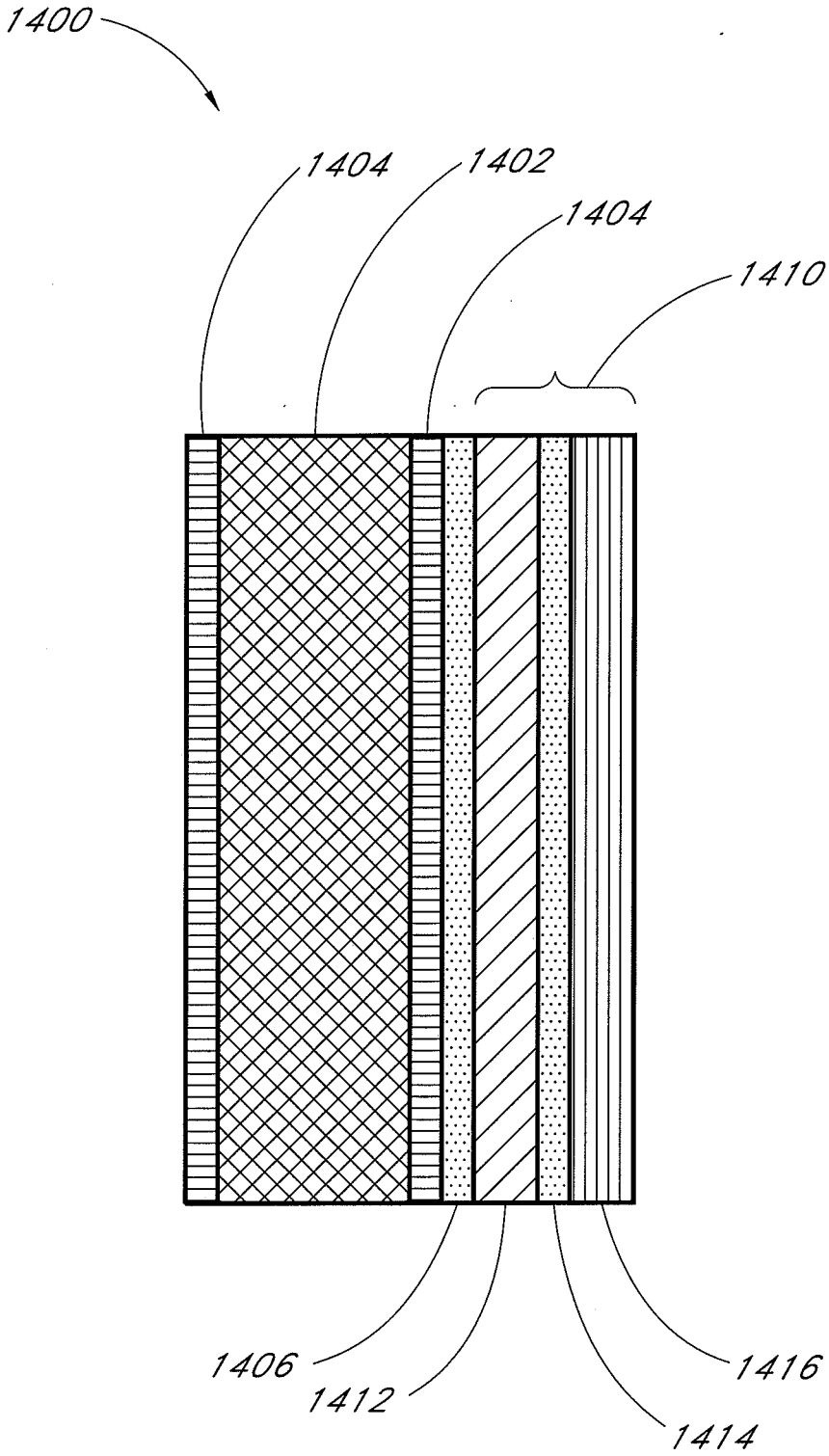

FIG. 14

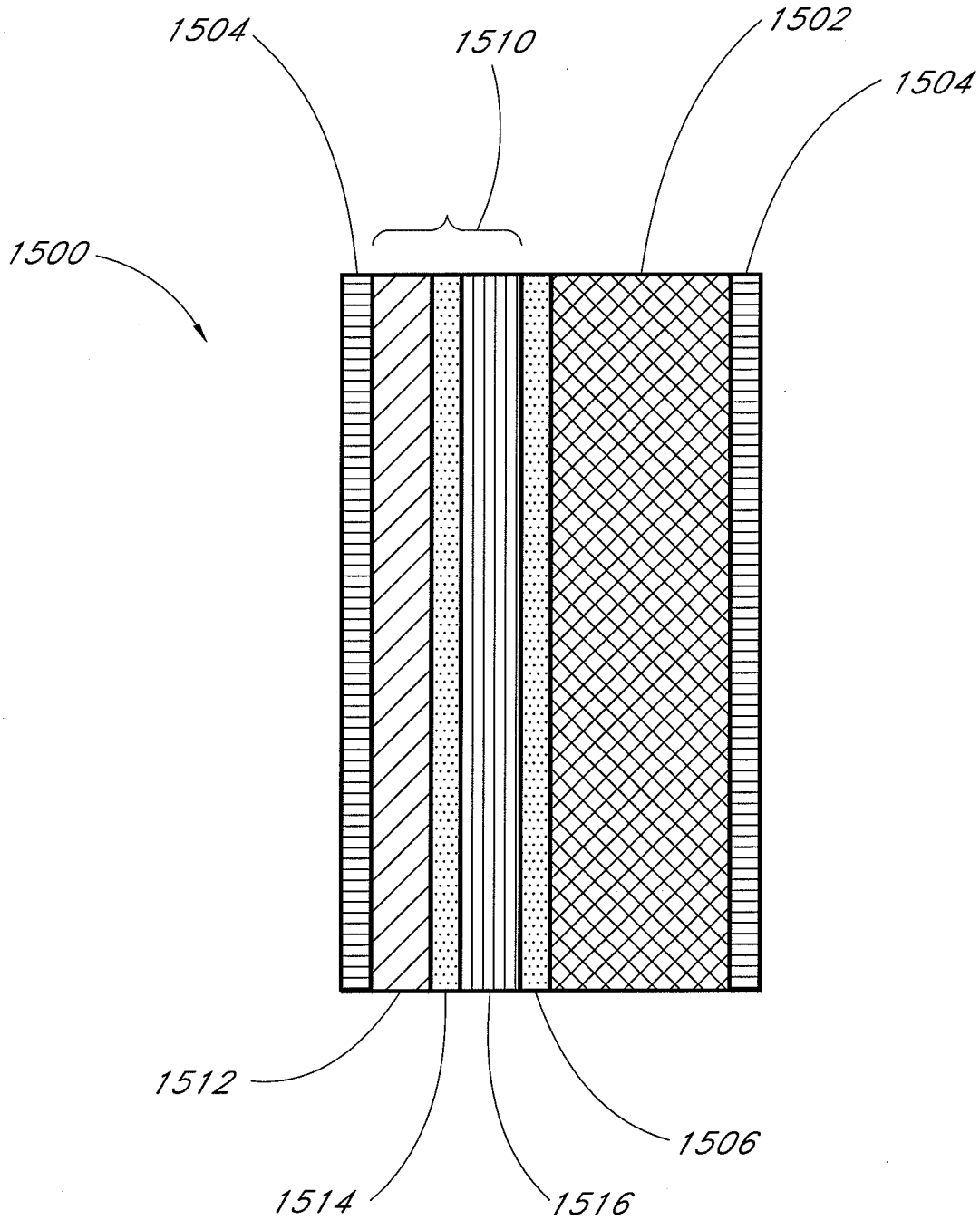

FIG. 15

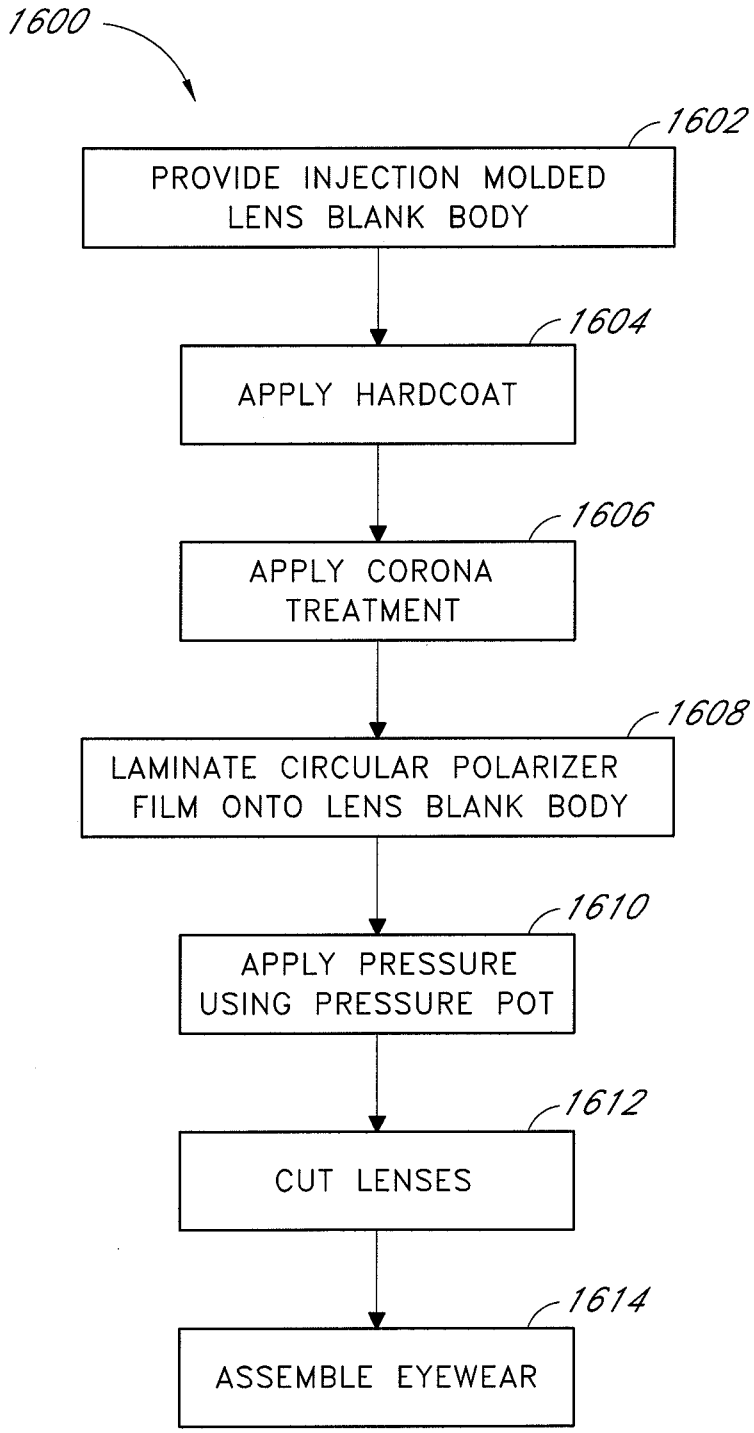
1600
1602
PROVIDE INJECTION MOLDED LENS BLANK BODY
1604
APPLY HARDCOAT
1606
APPLY CORONA TREATMENT
1608
LAMINATE CIRCULAR POLARIZER FILM ONTO LENS BLANK BODY
1610
APPLY PRESSURE USING PRESSURE POT
1612
CUT LENSES
1614
ASSEMBLE EYEWEAR

FIG. 16

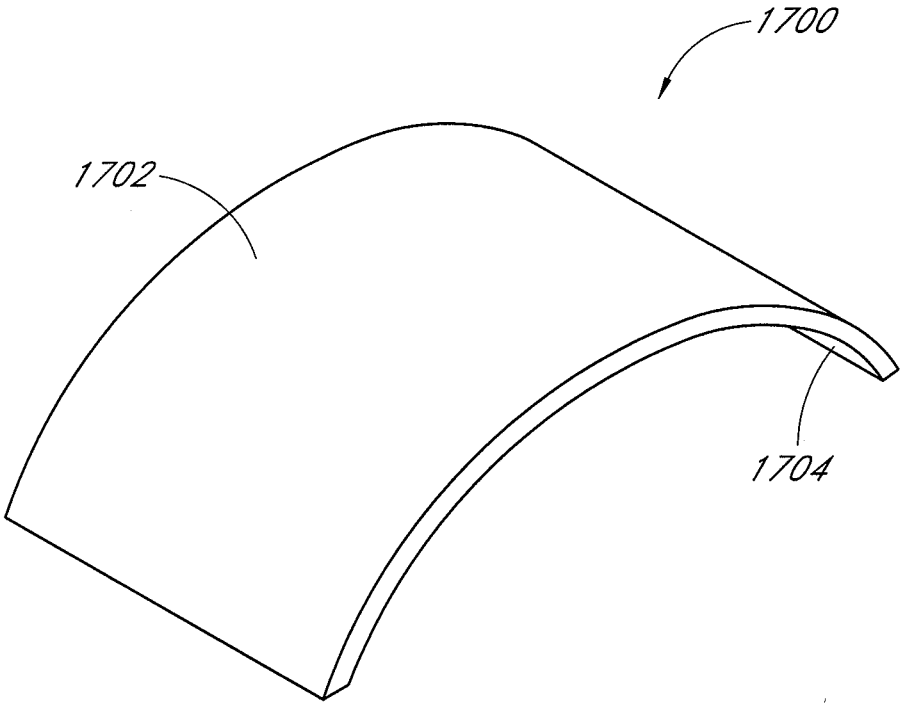

FIG. 17A

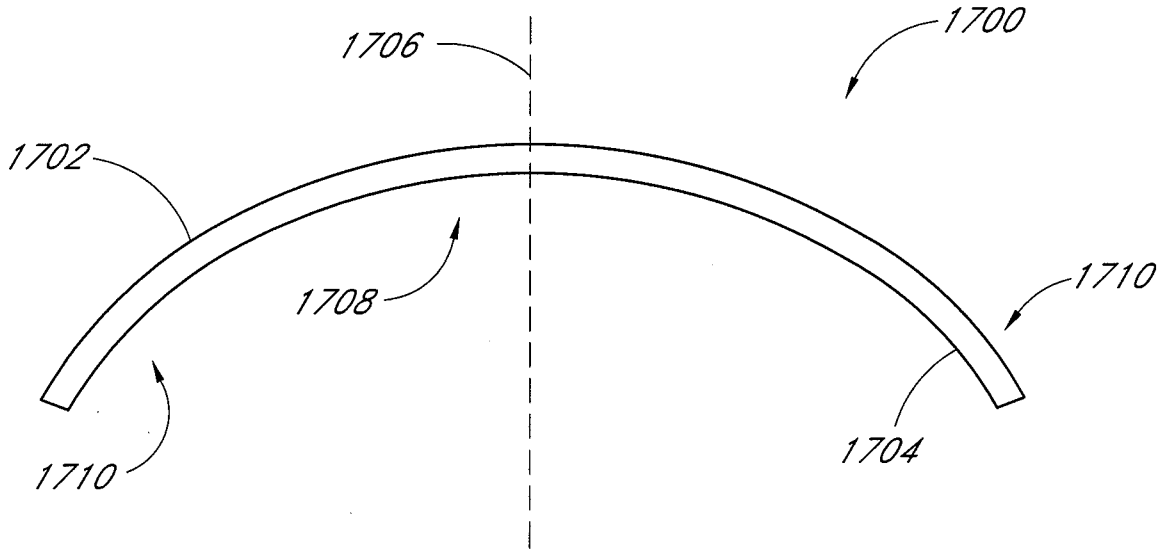

FIG. 17B

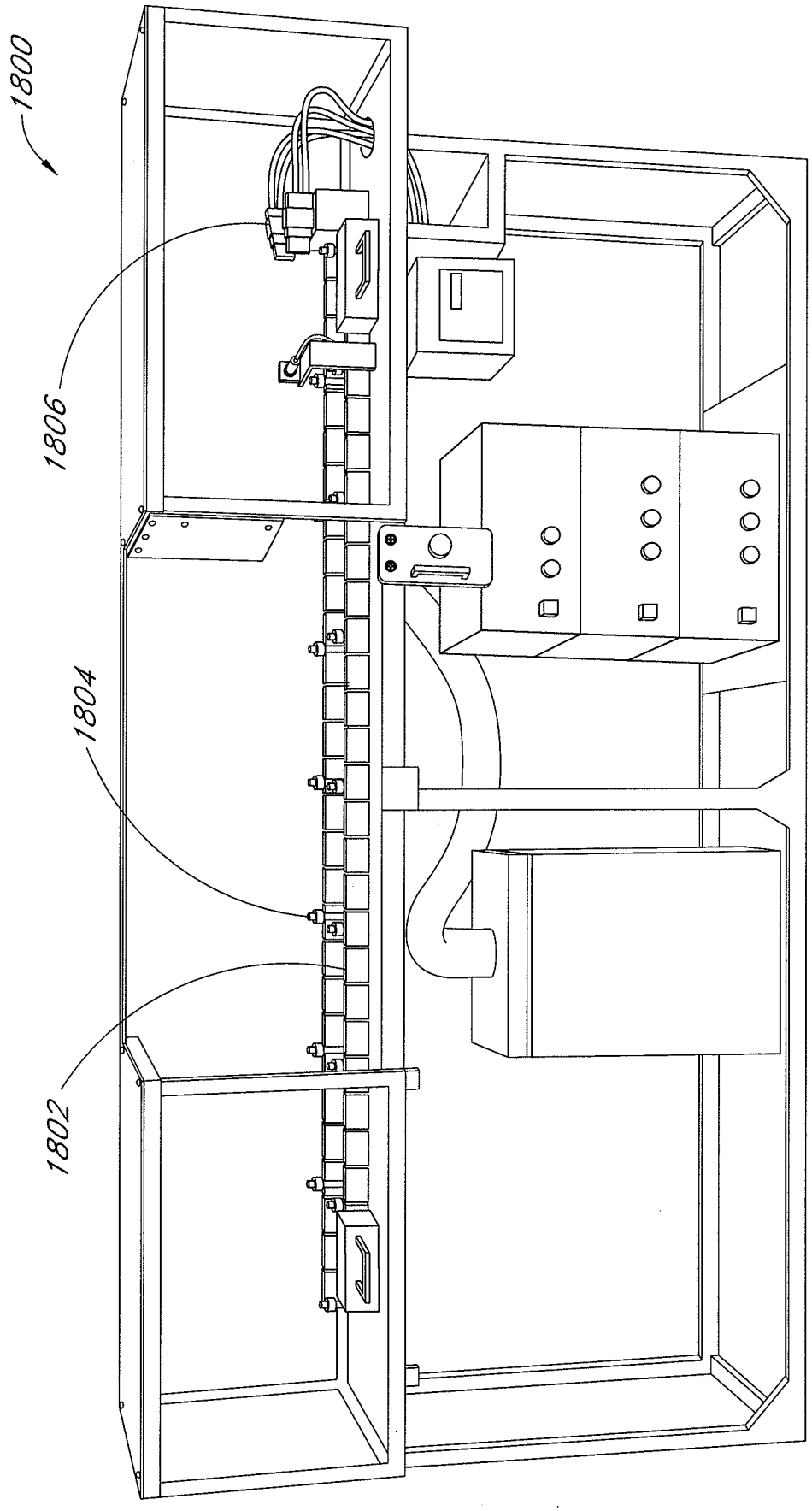

FIG. 18A

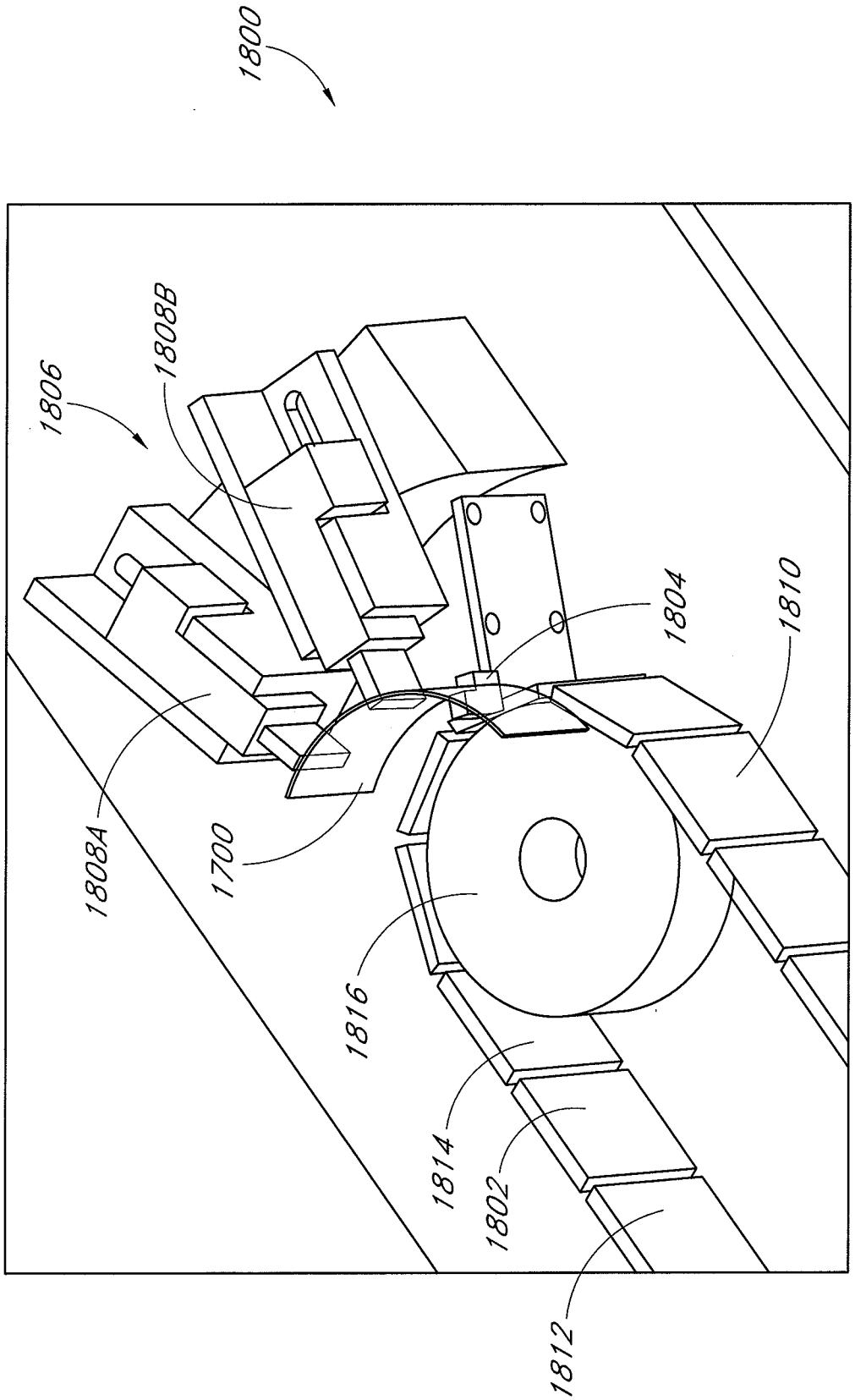

FIG. 18B

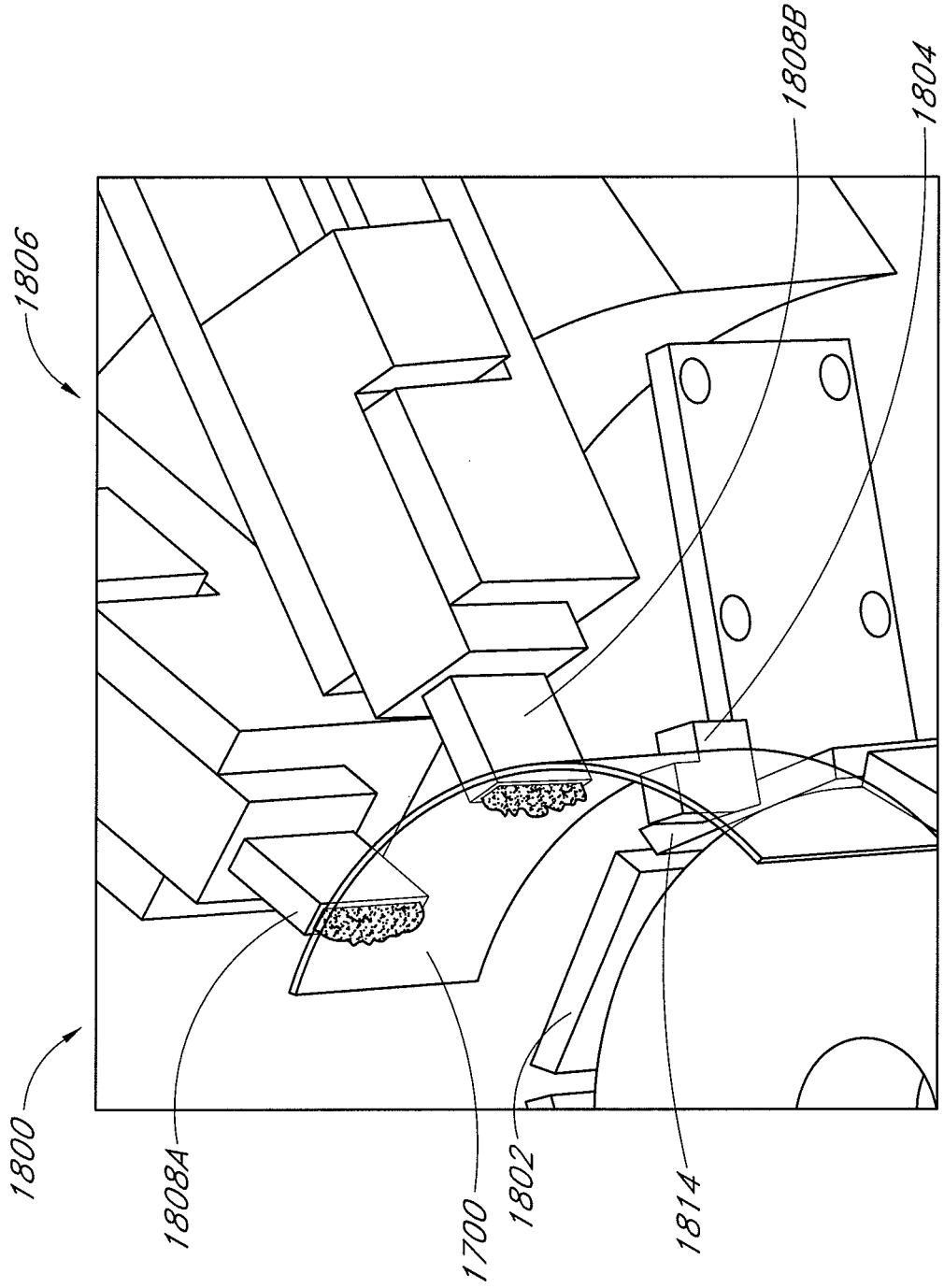

FIG. 18C

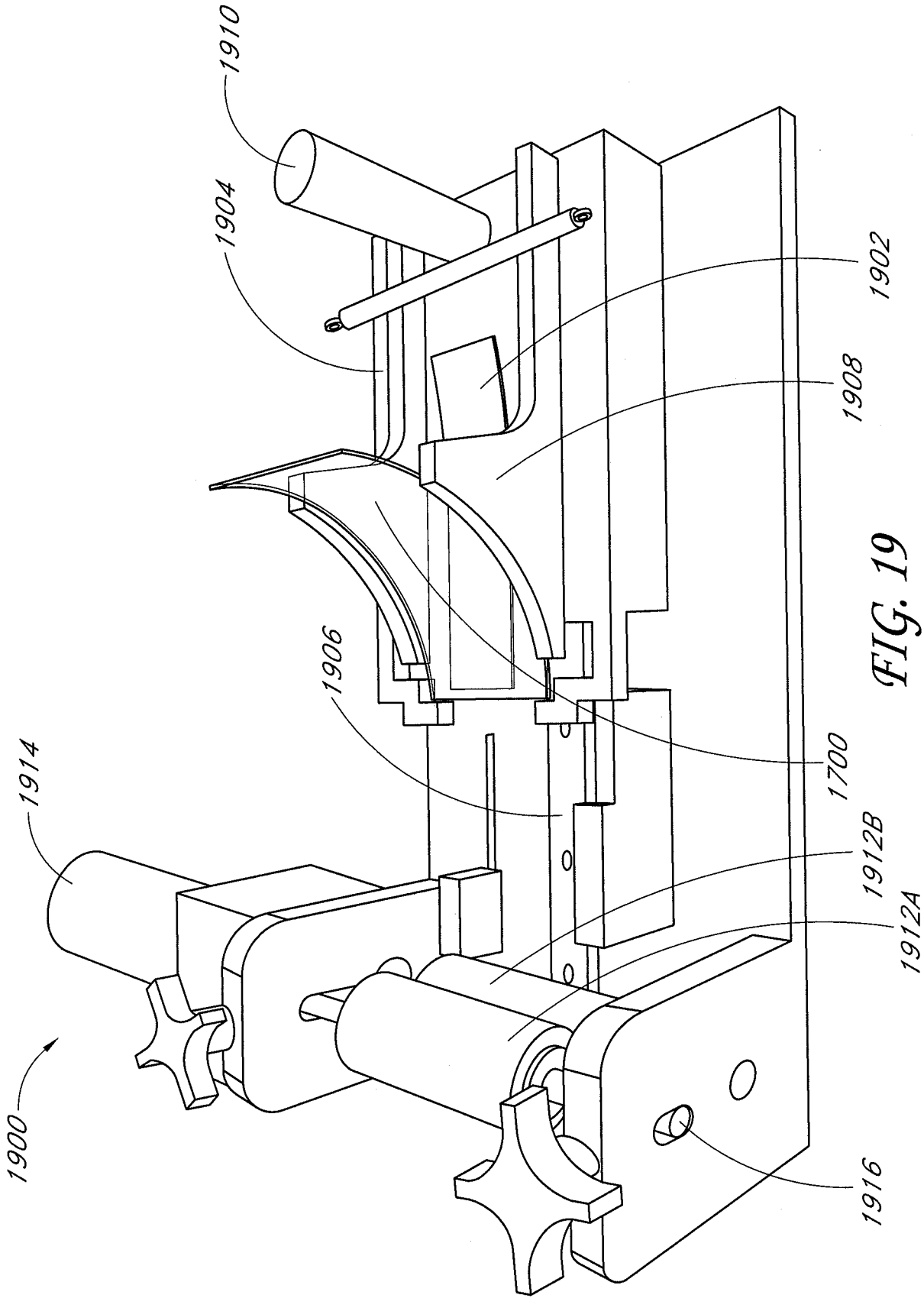

FIG. 19

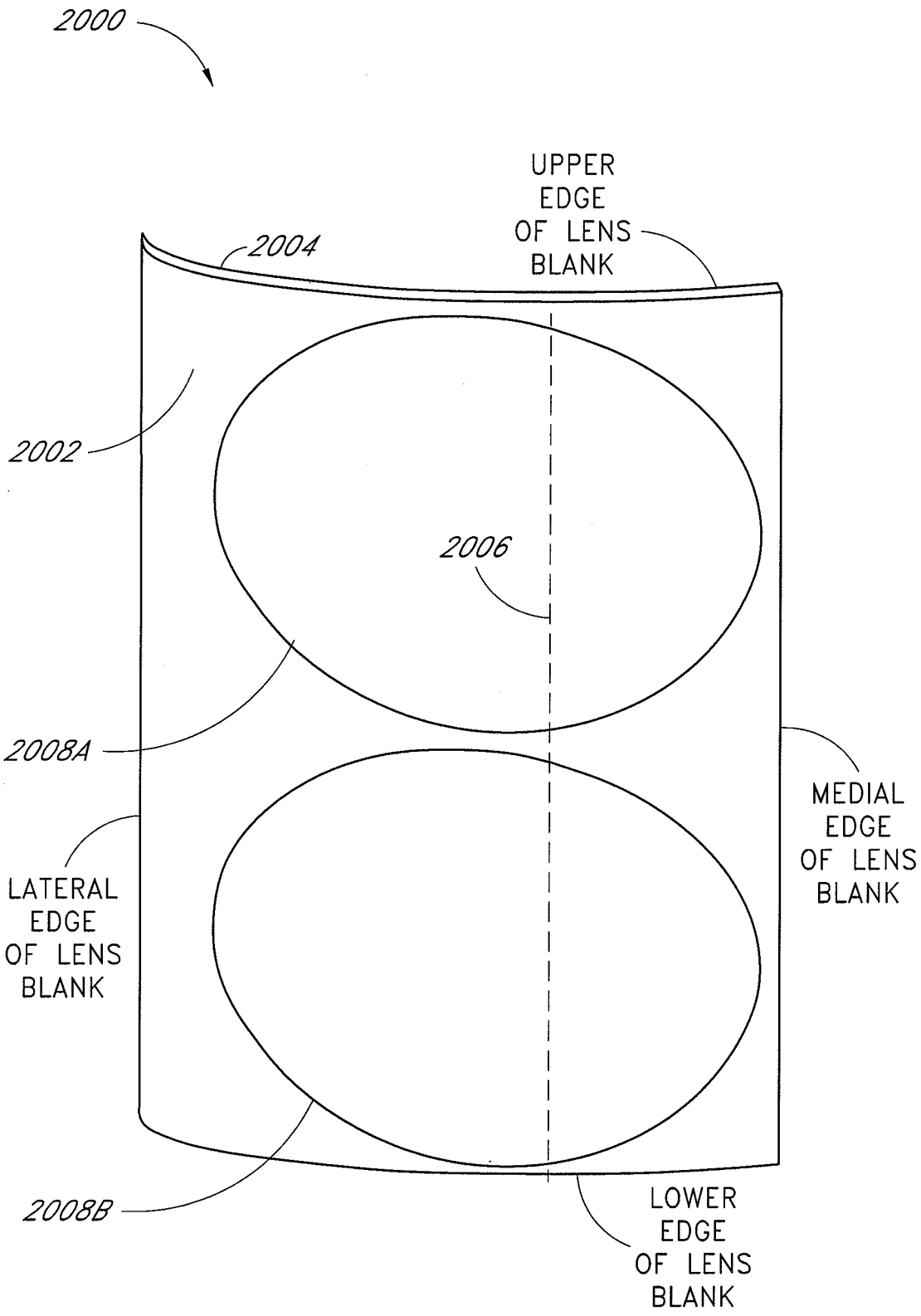
2000
UPPER EDGE OF LENS BLANK
2004
2002
2006
2008A
LATERAL EDGE OF LENS BLANK
MEDIAL EDGE OF LENS BLANK
2008B
LOWER EDGE OF LENS BLANK

FIG. 20

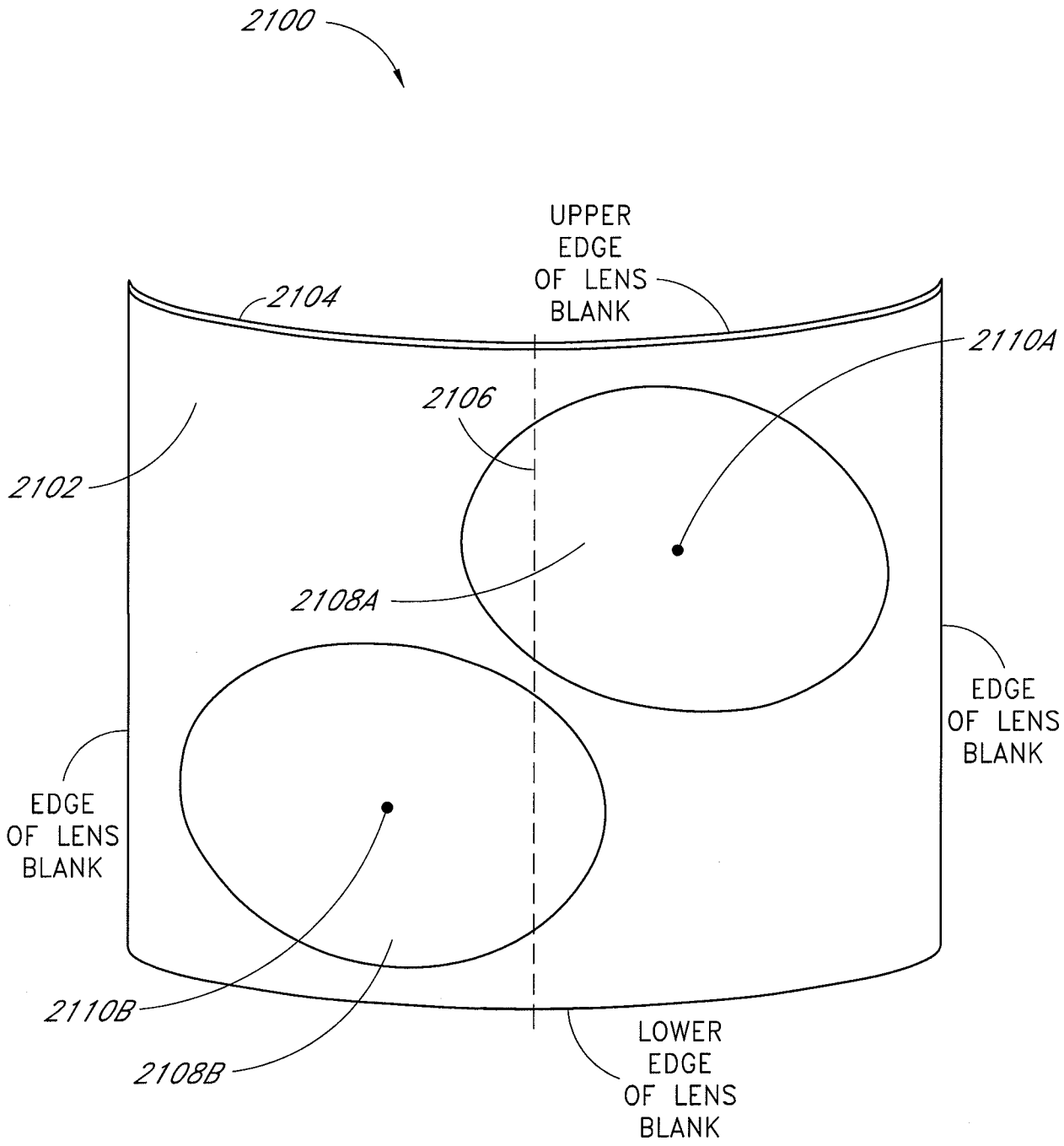
2100
UPPER EDGE OF LENS BLANK
2104
2110A
2106
2102
2108A
EDGE OF LENS BLANK
EDGE OF LENS BLANK
2110B
2108B
LOWER EDGE OF LENS BLANK

FIG. 21