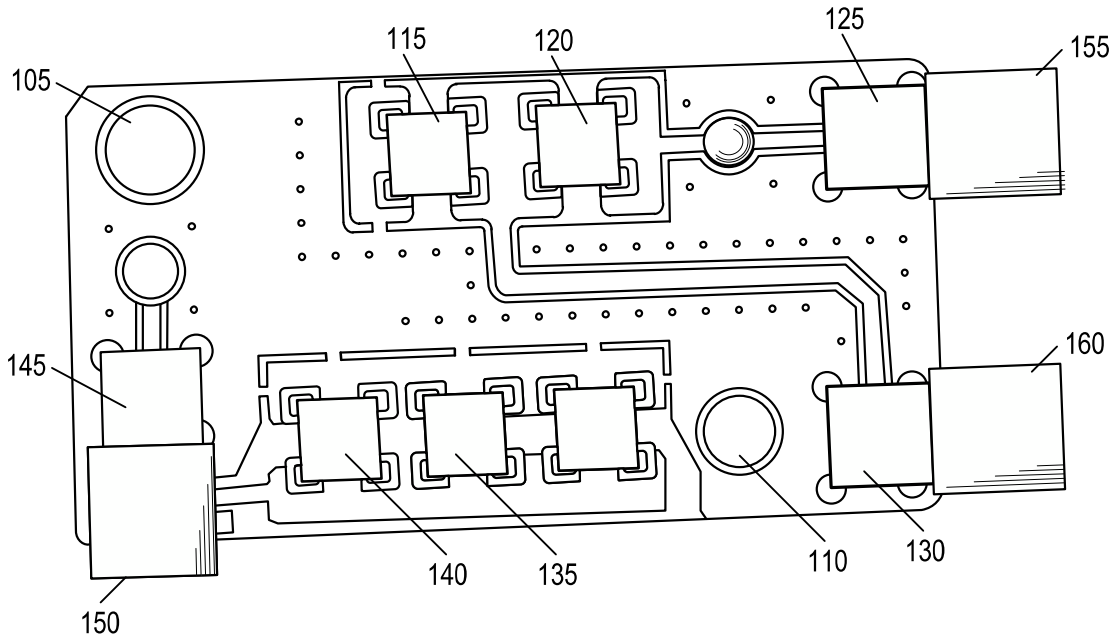
100
105
115
120
125
155
145
160
140
135
110
130
150

FIG. 1

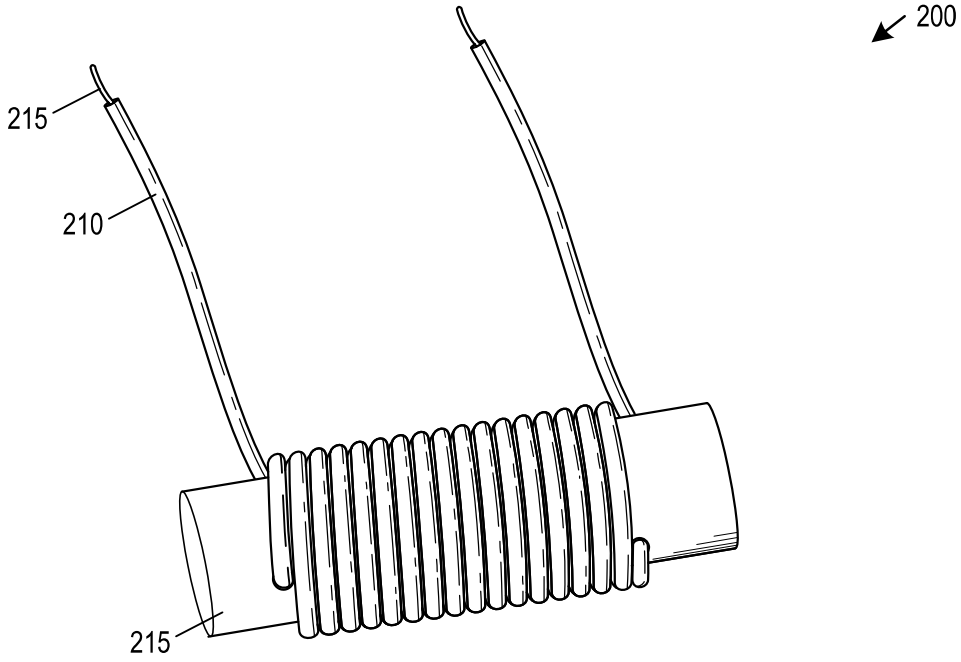
200
215
210
215

FIG. 2

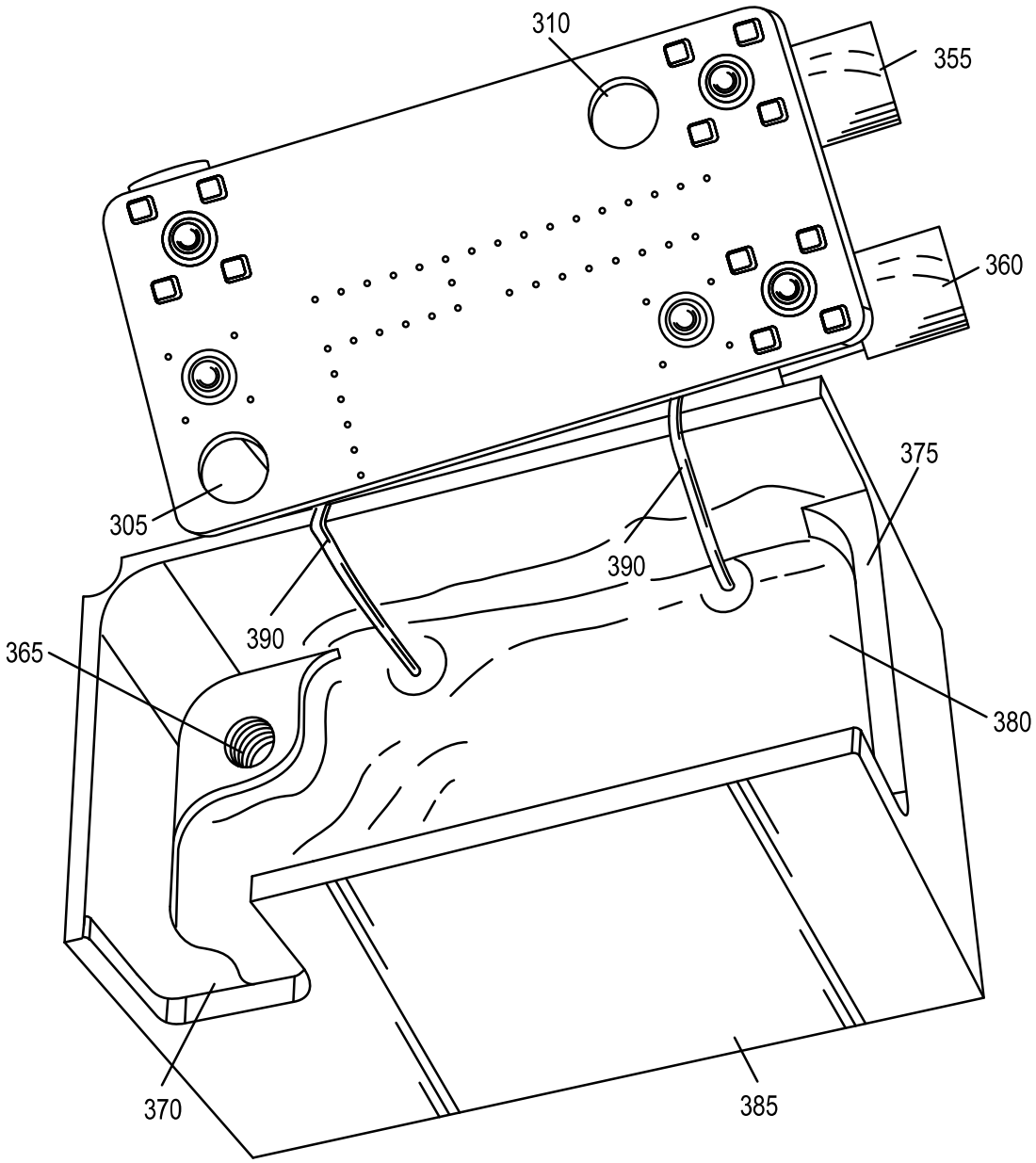

FIG. 3

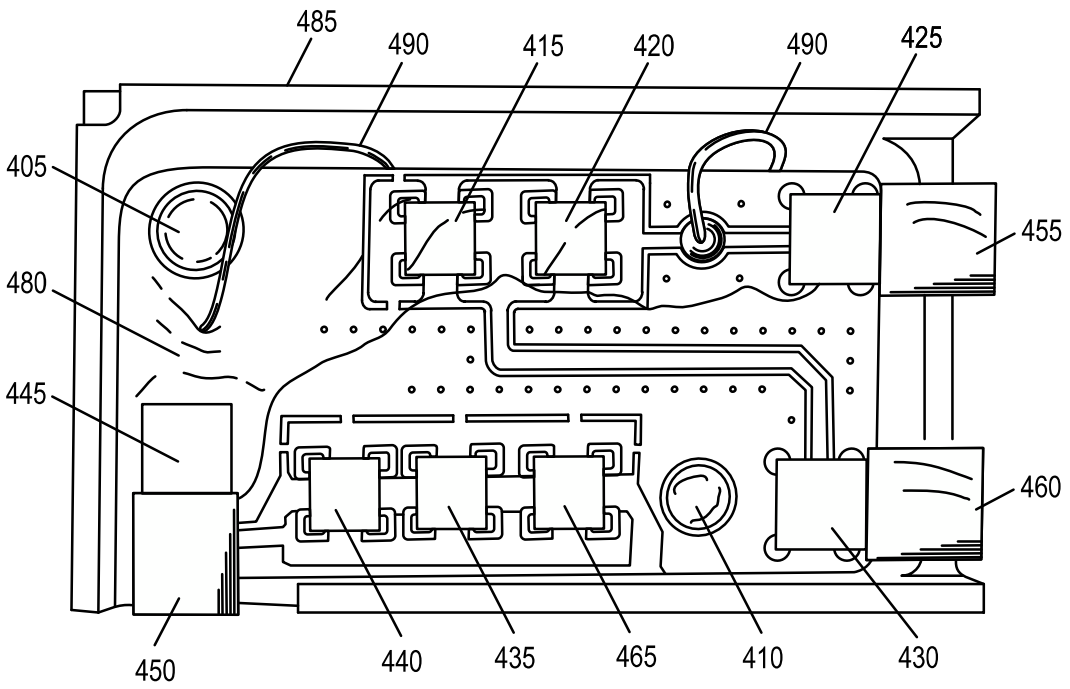
400
485
490
415
420
490
425
405
455
480
445
460
450
440
435
465
410
430

FIG. 4

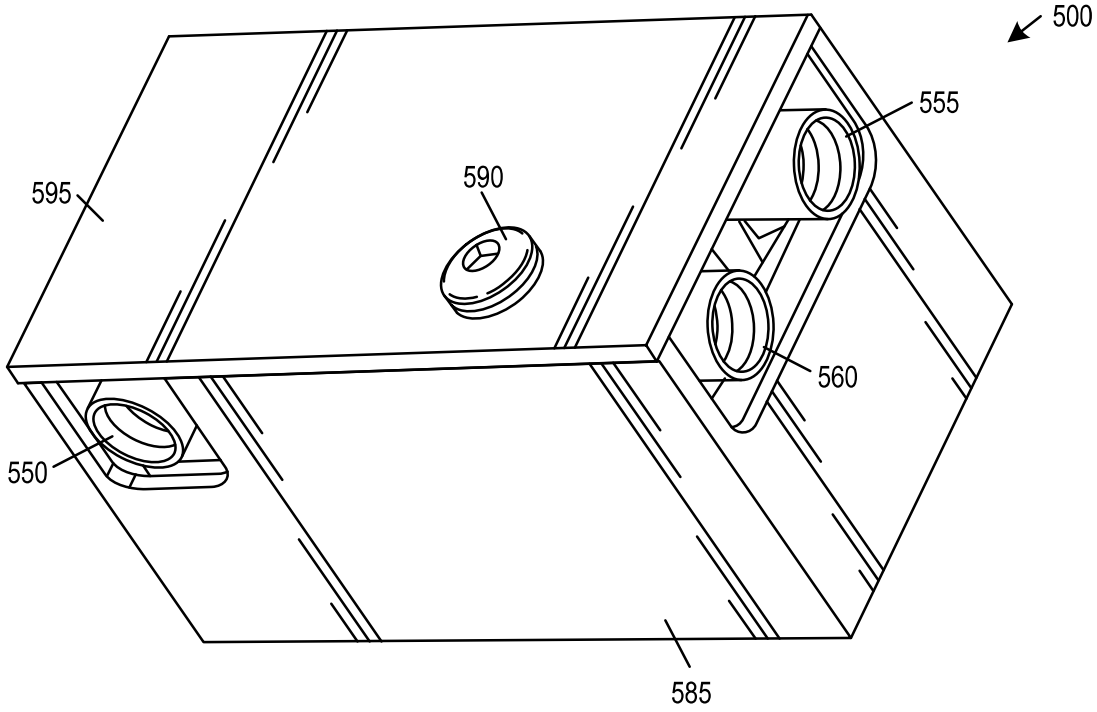
500
555
595
590
560
550
585

FIG. 5

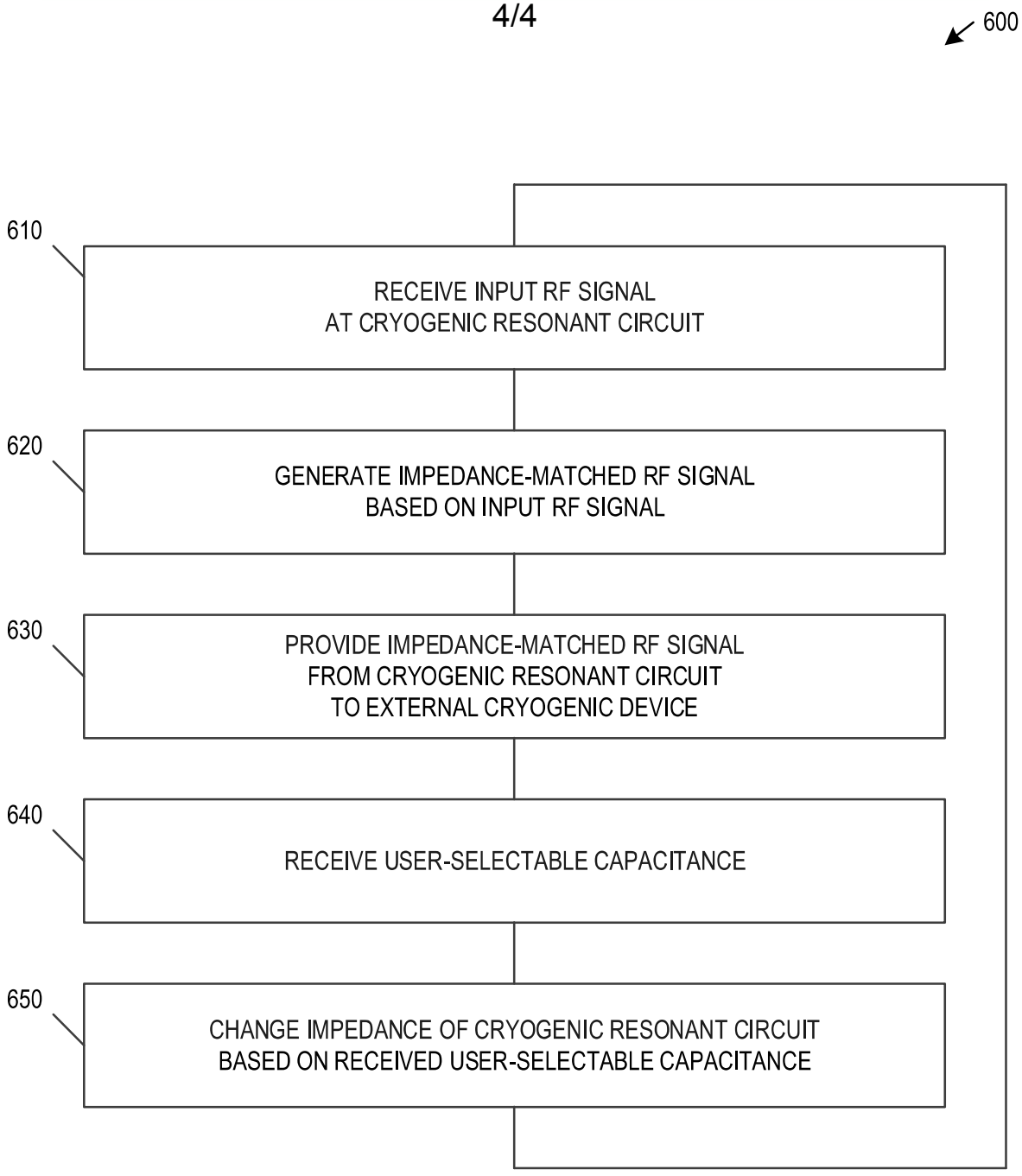
600
610
RECEIVE INPUT RF SIGNAL
AT CRYOGENIC RESONANT CIRCUIT
620
GENERATE IMPEDANCE-MATCHED RF SIGNAL
BASED ON INPUT RF SIGNAL
630
PROVIDE IMPEDANCE-MATCHED RF SIGNAL
FROM CRYOGENIC RESONANT CIRCUIT
TO EXTERNAL CRYOGENIC DEVICE
640
RECEIVE USER-SELECTABLE CAPACITANCE
650
CHANGE IMPEDANCE OF CRYOGENIC RESONANT CIRCUIT
BASED ON RECEIVED USER-SELECTABLE CAPACITANCE

FIG. 6