PCT

WORLD INTELLECTUAL PROPERTY ORGANIZATION
International Bureau

1020027688-0

INTERNATIONAL APPLICATION PUBLISHED UNDER THE PATENT COOPERATION TREATY (PCT)

(51) International Patent Classification 6 : F25B 21/04

A1

(11) International Publication Number: WO 99/27312

(43) International Publication Date: 3 June 1999 (03.06.99)

(21) International Application Number: PCT/GB98/03513

(22) International Filing Date: 24 November 1998 (24.11.98)

(30) Priority Data:
9724795.1 24 November 1997 (24.11.97) GB

(71) Applicant *(for all designated States except US)*: COOLBOX (LLC) LIMITED [US/US]; 1912 Capitol Avenue, P.O. Box 87, Cheyenne, Wyoming (US).

(72) Inventor; and

(75) Inventor/Applicant *(for US only)*: WHEELER, Arthur [GB/GB]; 40 Mill Road, West Mersea, Essex (GB).

(74) Agent: PIESOLD, Alexander, James; Frank B. Dehn & Co., 179 Queen Victoria Street, London EC4V 4EL (GB).

(81) Designated States: AL, AM, AT, AU, AZ, BA, BB, BG, BR, BY, CA, CH, CN, CU, CZ, DE, DK, EE, ES, FI, GB, GD, GE, GH, GM, HR, HU, ID, IL, IS, JP, KE, KG, KP, KR, KZ, LC, LK, LR, LS, LT, LU, LV, MD, MG, MK, MN, MW, MX, NO, NZ, PL, PT, RO, RU, SD, SE, SG, SI, SK, SL, TJ, TM, TR, TT, UA, UG, US, UZ, VN, YU, ZW, ARIPO patent (GH, GM, KE, LS, MW, SD, SZ, UG, ZW), Eurasian patent (AM, AZ, BY, KG, KZ, MD, RU, TJ, TM), European patent (AT, BE, CH, CY, DE, DK, ES, FI, FR, GB, GR, IE, IT, LU, MC, NL, PT, SE), OAPI patent (BF, BJ, CF, CG, CI, CM, GA, GN, GW, ML, MR, NE, SN, TD, TG).

Published

With international search report.

Before the expiration of the time limit for amending the claims and to be republished in the event of the receipt of amendments.

(54) Title: CONTAINER

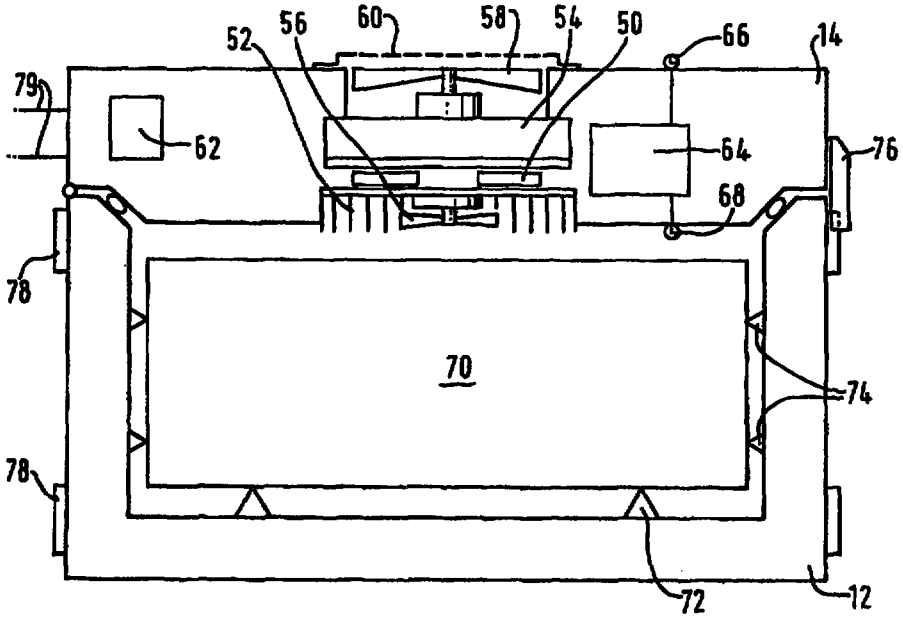

(57) Abstract

A portable container (10) for receiving contents for transport whilst regulating the temperature of the contents comprises combined heating and/or cooling means in the form of a Peltier effect device (50), a removable inner receptacle (70) for receiving the contents, an air gap around the outside of the inner receptacle, and a control unit (62) for controlling the Peltier effect device so as to regulate the temperature of the air around the outside of the inner receptacle and thereby regulate the temperature of the contents of the inner receptacle. The control unit can have a temperature logging system for recording the temperature history of the contents of the container.