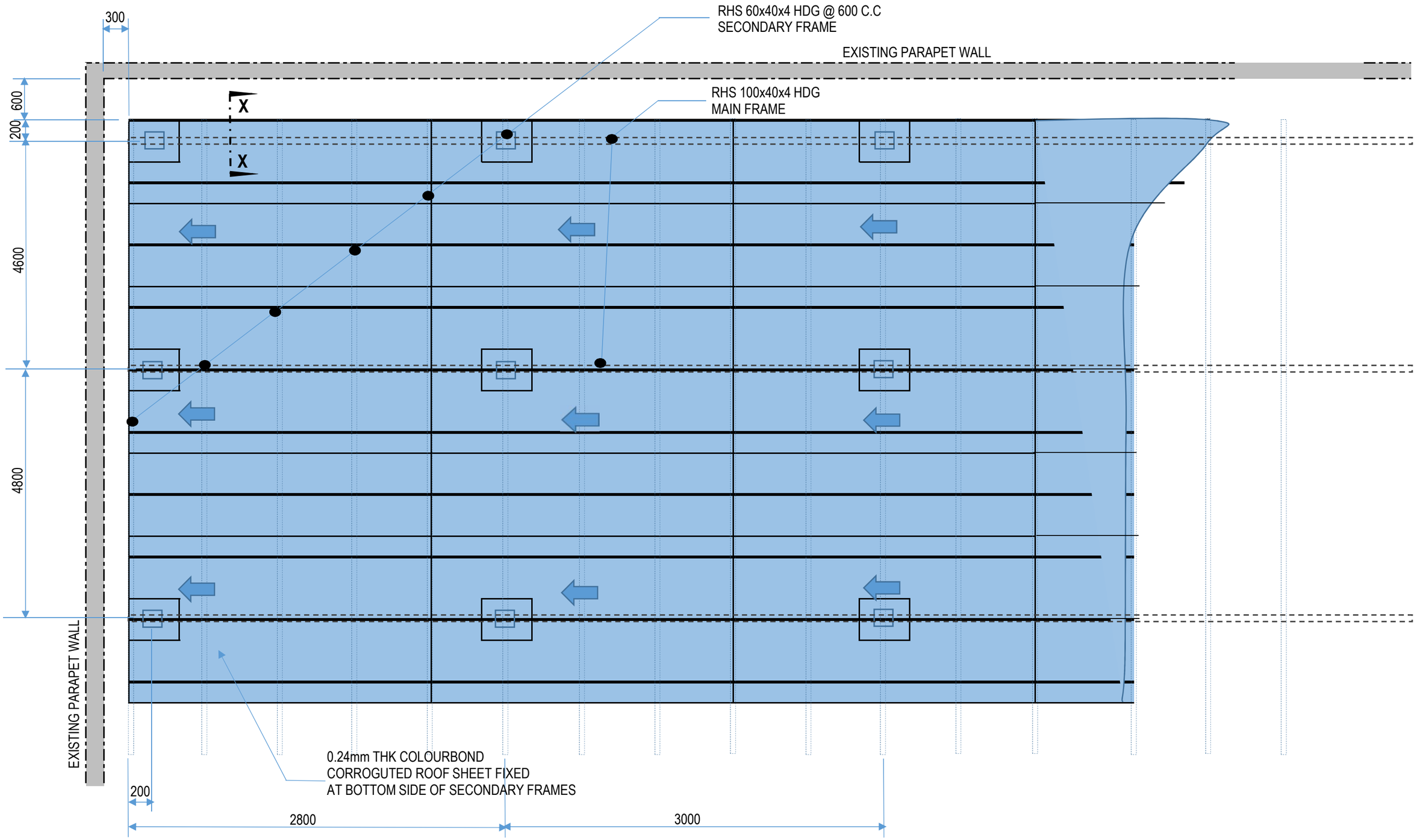

PV SOLAR FRAMING PLAN FOR CONCRETE FLAT ROOF

Drawing No.: ZC - 01

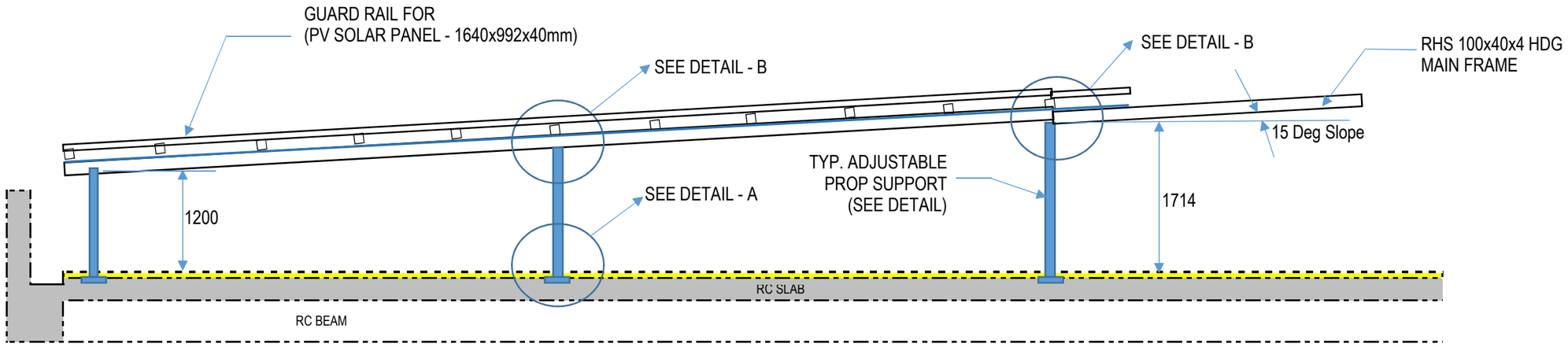

SECTIONAL VIEW OF HDB HOUSING FLAT ROOF

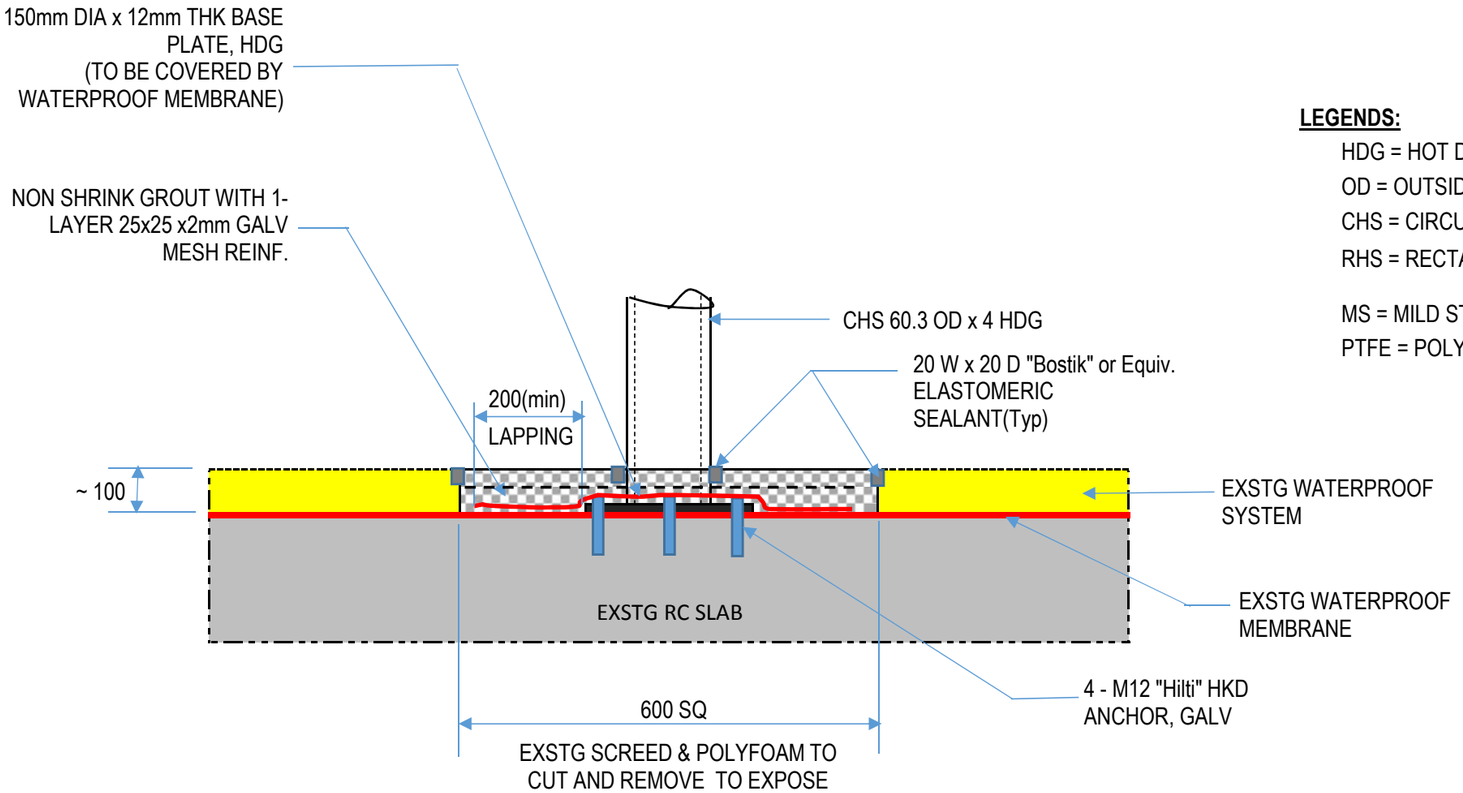

DETAIL - A

LEGENDS:

HDG = HOT DIP GALVANIZED
OD = OUTSIDE DIAMETER
CHS = CIRCULAR HOLLOW SECTION
RHS = RECTANGULAR HOLLOW SECTION

MS = MILD STEEL
PTFE = POLY TETRA FLUORO ETHYLENE

Drawing No.: ZC - 02

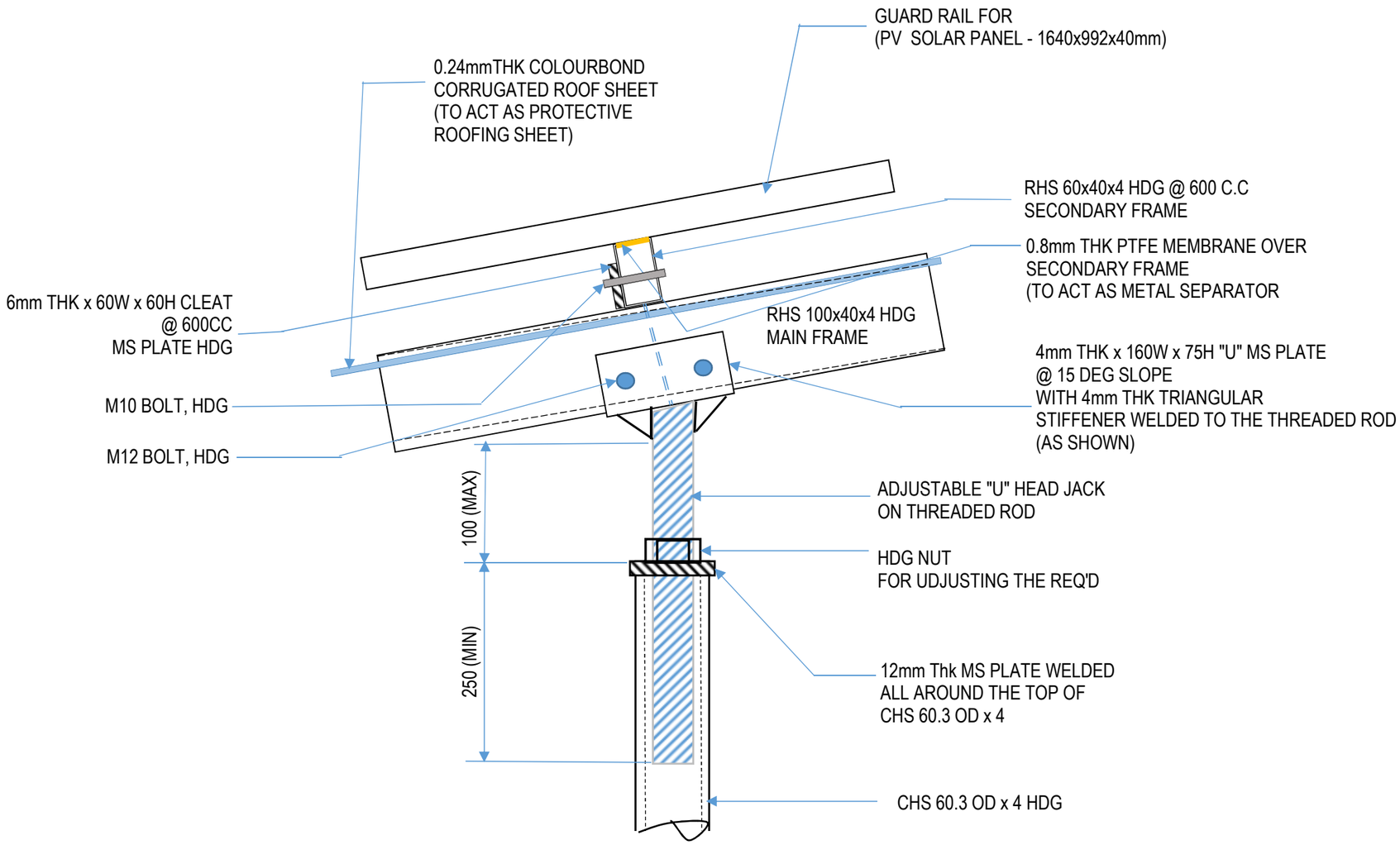

DETAIL - B

Drawing No.: ZC - 03

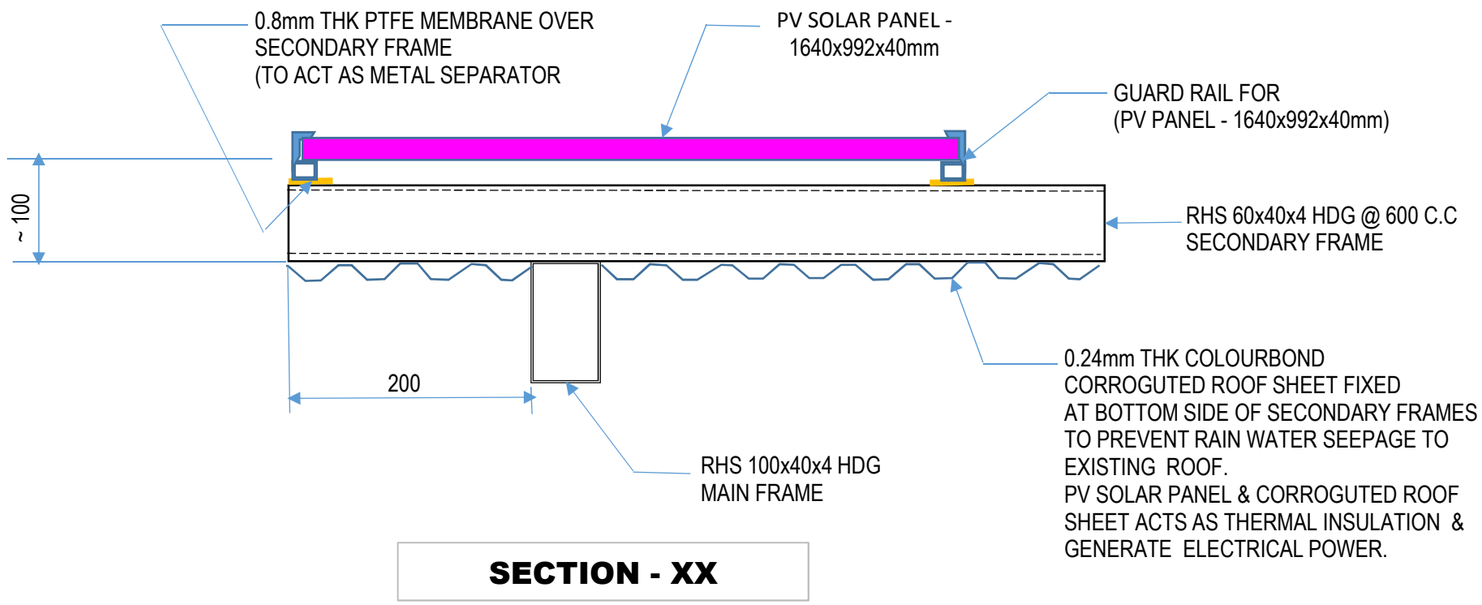

SECTION - XX

Drawing No.: ZC - 04

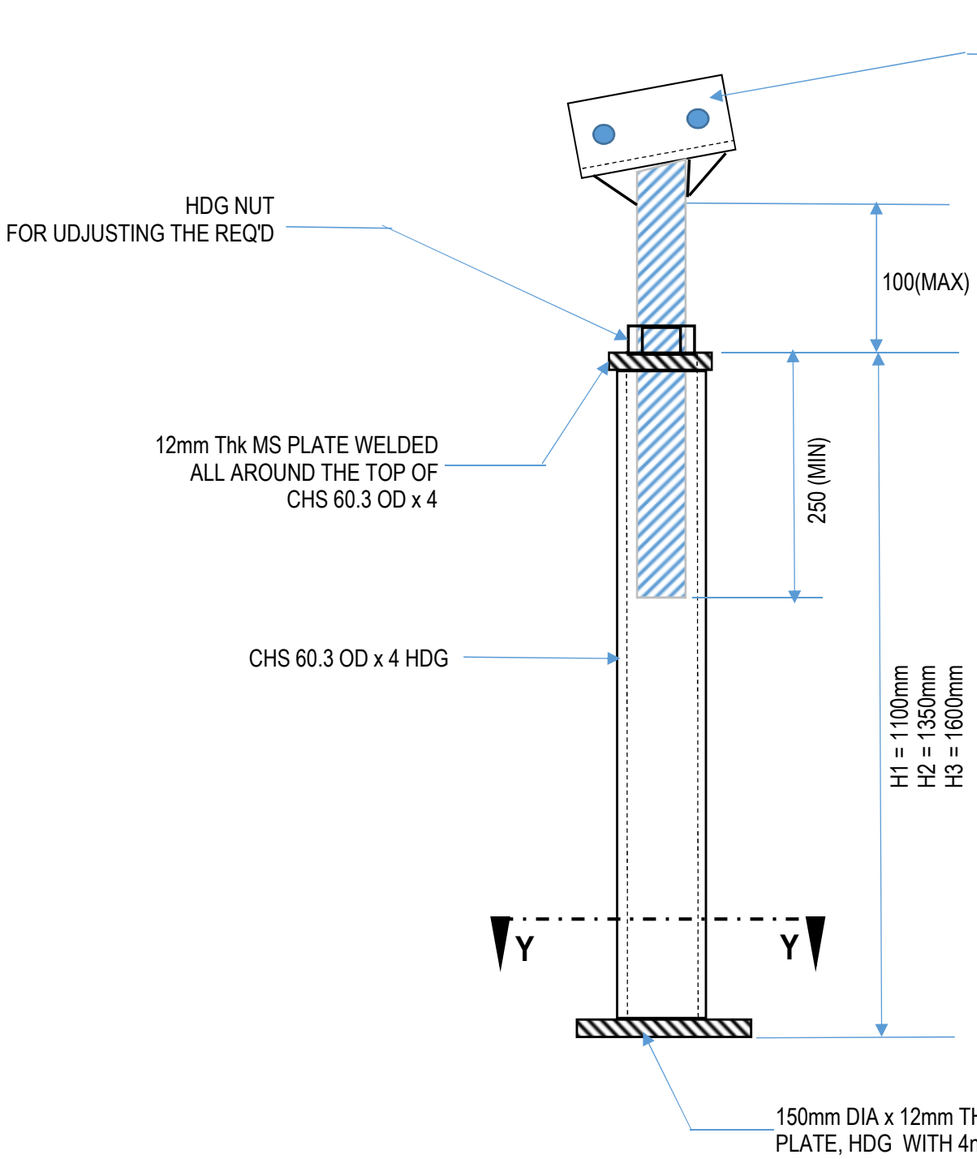

TYP. DETAIL OF ADJUSTABLE PROP SUPPORT

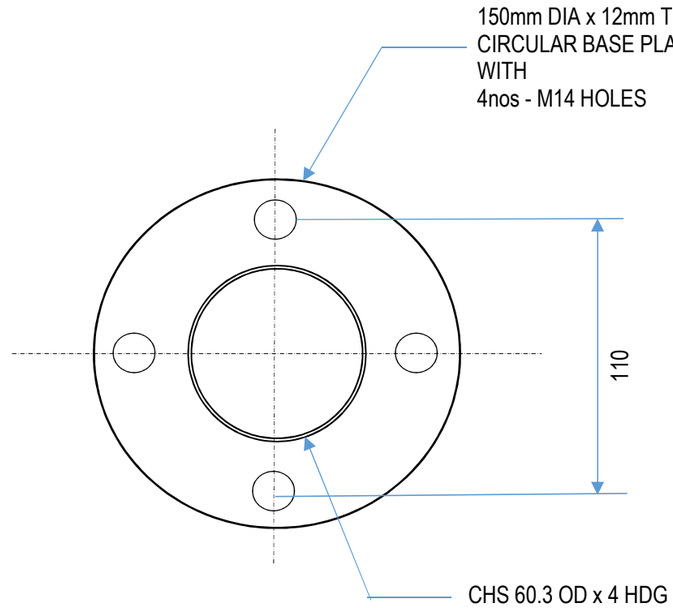

SECTION - YY

Drawing No.: ZC - 05