(12) INTERNATIONAL APPLICATION PUBLISHED UNDER THE PATENT COOPERATION TREATY (PCT)

(19) World Intellectual Property Organization
International Bureau

(43) International Publication Date
28 August 2003 (28.08.2003)

PCT

(10) International Publication Number
WO 03/070557 A1

(51) International Patent Classification[7]: B63B 1/38, 1/20

(21) International Application Number: PCT/NO03/00066

(22) International Filing Date: 21 February 2003 (21.02.2003)

(25) Filing Language: English

(26) Publication Language: English

(30) Priority Data:
20020867 22 February 2002 (22.02.2002) NO

(71) Applicant: EFFECT SHIPS INTERNATIONAL [NO/NO]; Thor Dahls gate 1A, N-3210 Sandefjord (NO).

(72) Inventor: OSMUNDSVAAG, Arne; Leikvollveien 33, N-1387 Asker (NO).

(74) Agent: TANDBERGS PATENTKONTOR AS; Boks 7085 M, N-0306 Oslo (NO).

(81) Designated States (national): AE, AG, AL, AM, AT, AU, AZ, BA, BB, BG, BR, BY, BZ, CA, CH, CN, CO, CR, CU, CZ, DE, DK, DM, DZ, EC, EE, ES, FI, GB, GD, GE, GH, GM, HR, HU, ID, IL, IN, IS, JP, KE, KG, KP, KR, KZ, LC, LK, LR, LS, LT, LU, LV, MA, MD, MG, MK, MN, MW, MX, MZ, NO, NZ, OM, PH, PL, PT, RO, RU, SC, SD, SE, SG, SK, SL, TJ, TM, TN, TR, TT, TZ, UA, UG, UZ, VC, VN, YU, ZA, ZM, ZW.

(84) Designated States (regional): ARIPO patent (GH, GM, KE, LS, MW, MZ, SD, SL, SZ, TZ, UG, ZM, ZW), Eurasian patent (AM, AZ, BY, KG, KZ, MD, RU, TJ, TM), European patent (AT, BE, BG, CH, CY, CZ, DE, DK, EE, ES, FI, FR, GB, GR, HU, IE, IT, LU, MC, NL, PT, SE, SI, SK, TR), OAPI patent (BF, BJ, CF, CG, CI, CM, GA, GN, GQ, GW, ML, MR, NE, SN, TD, TG).

Published:
— with international search report

For two-letter codes and other abbreviations, refer to the "Guidance Notes on Codes and Abbreviations" appearing at the beginning of each regular issue of the PCT Gazette.

(54) Title: AIR CUSHION VESSEL

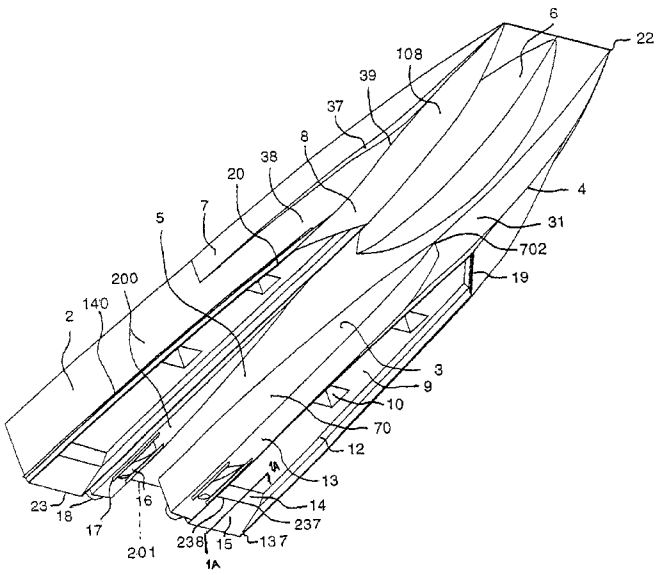

(57) Abstract: The invention comprises a vessel hull, which is supported by a combination of a static air pressure (an air cushion), dynamic lift (planning hull section), aerodynamic rameffect (in multihull applications) in combination with additional hull sections (some of which are planning and some of which are displacing) designed to improve the stability, forward motion and sea keeping characteristics of the vessel, house efficient propulsion units and reduce the resistance of the vessel, not only in calm water but equally in waves. The idea of the invention can be used for both monohull and number of multihull vessels described below, intended for high relative speeds.

WO 03/070557 A1