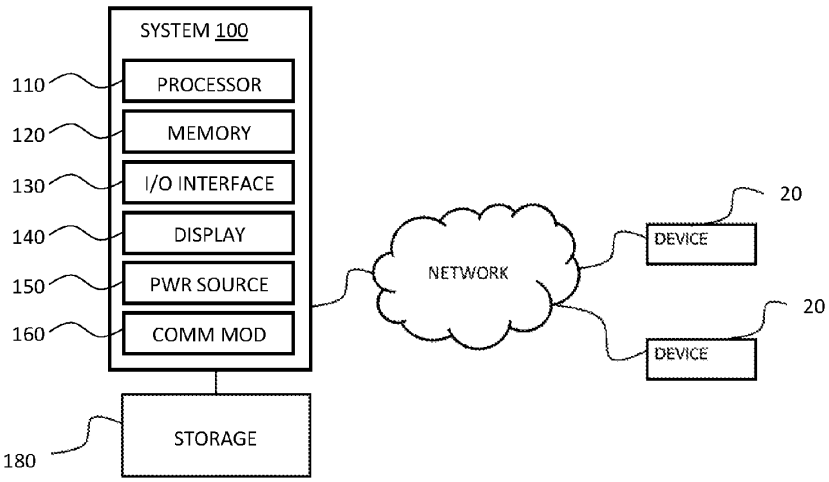
SYSTEM 100
110
PROCESSOR
120
MEMORY
130
I/O INTERFACE
140
DISPLAY
150
PWR SOURCE
160
COMM MOD
180
STORAGE
NETWORK
20
DEVICE
20
DEVICE

Fig. 1

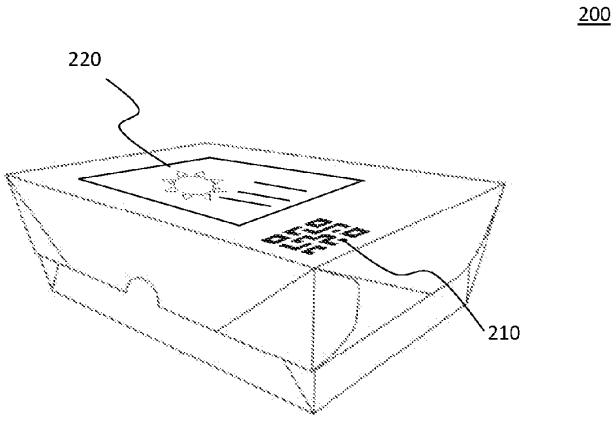
200
220
210

Fig. 2

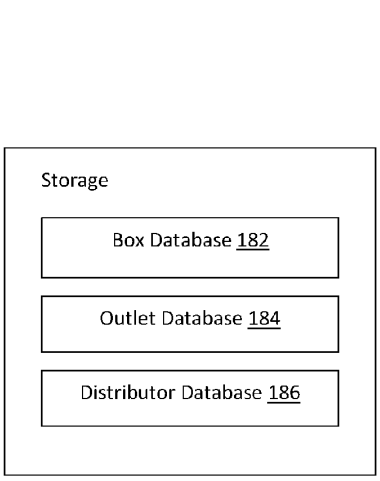
180
Storage
Box Database 182
Outlet Database 184
Distributor Database 186

Fig. 3

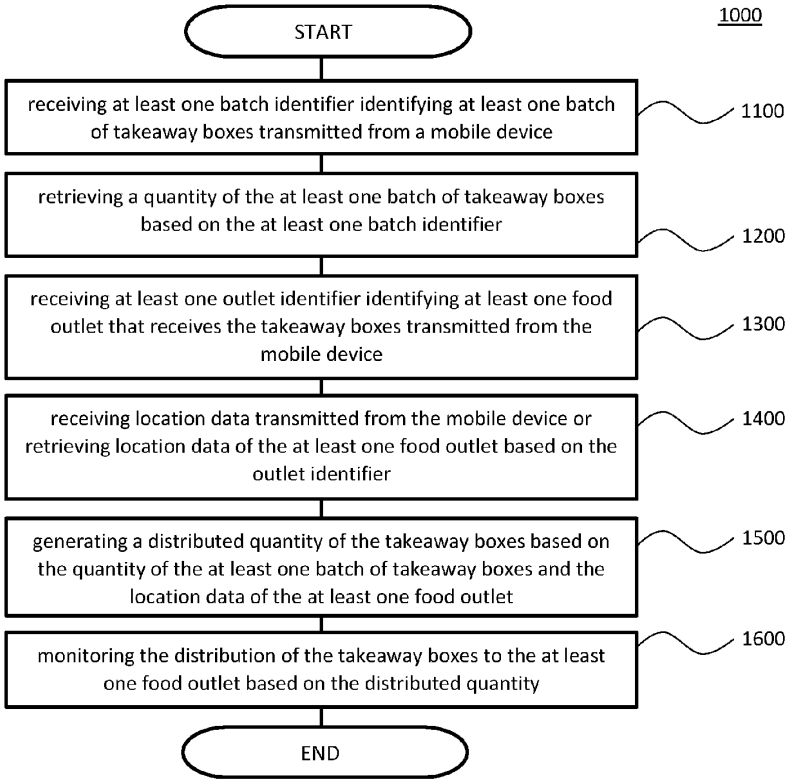
1000
START
receiving at least one batch identifier identifying at least one batch of takeaway boxes transmitted from a mobile device
1100
retrieving a quantity of the at least one batch of takeaway boxes based on the at least one batch identifier
1200
receiving at least one outlet identifier identifying at least one food outlet that receives the takeaway boxes transmitted from the mobile device
1300
receiving location data transmitted from the mobile device or retrieving location data of the at least one food outlet based on the outlet identifier
1400
generating a distributed quantity of the takeaway boxes based on the quantity of the at least one batch of takeaway boxes and the location data of the at least one food outlet
1500
monitoring the distribution of the takeaway boxes to the at least one food outlet based on the distributed quantity
1600
END

Fig. 4