FIG. 3

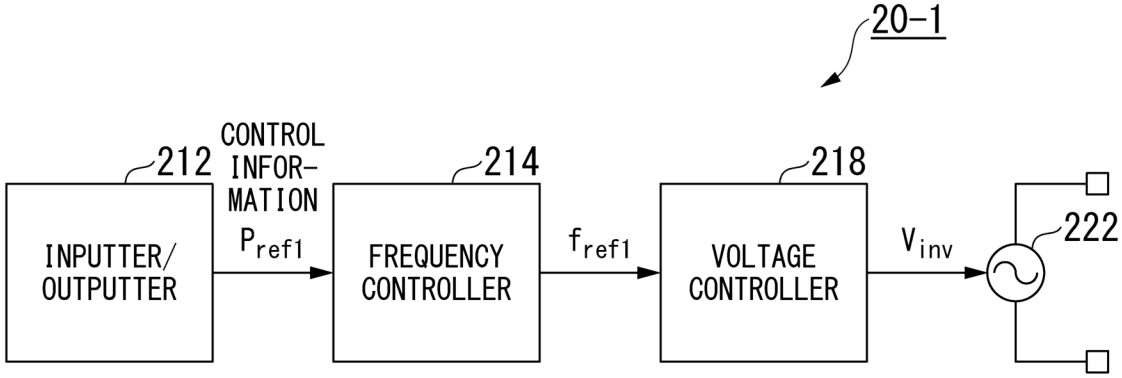
20-1
212
CONTROL INFOR-MATION
INPUTTER/ OUTPUTTER
P_{ref1}
214
FREQUENCY CONTROLLER
f_{ref1}
218
VOLTAGE CONTROLLER
V_{inv}
222

FIG. 4

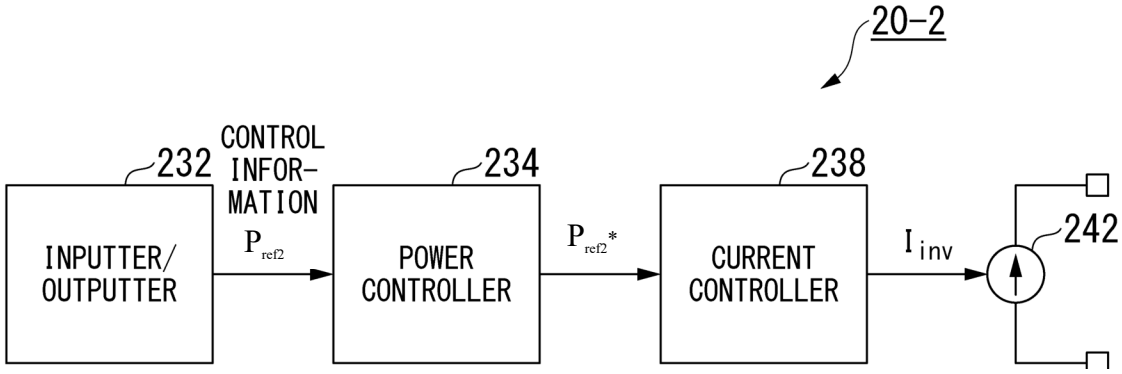
20-2
232
CONTROL INFOR-MATION
INPUTTER/ OUTPUTTER
P_{ref2}
234
POWER CONTROLLER
P_{ref2}^*
238
CURRENT CONTROLLER
I_{inv}
242

FIG. 5

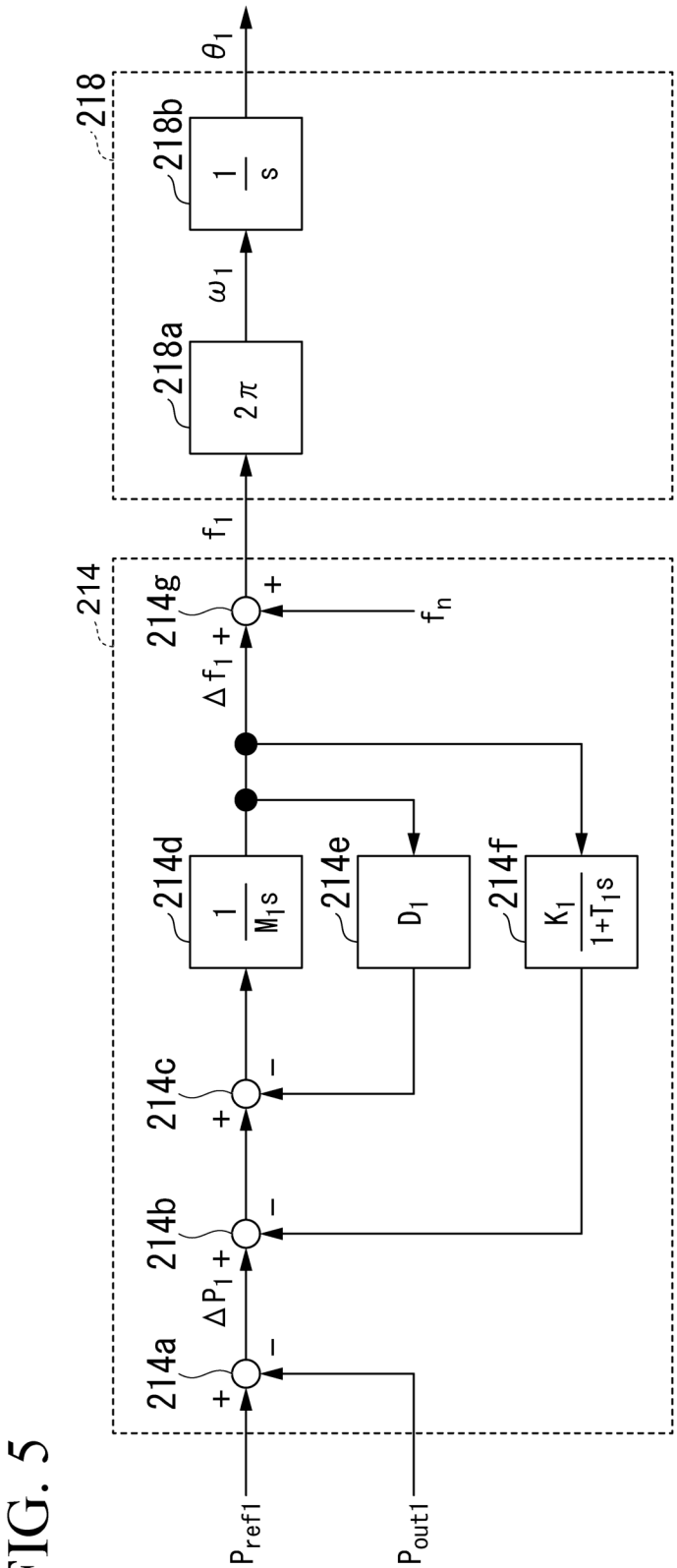
218
214
214a
214b
214c
214d
214e
214f
214g
218a
218b
P_{ref1}
P_{out1}
ΔP_1
Δf_1
f_1
f_n
ω_1
θ_1
2π
$\frac{1}{s}$
$\frac{1}{M_1 s}$
D_1
$\frac{K_1}{1+T_1 s}$