(12) INTERNATIONAL APPLICATION PUBLISHED UNDER THE PATENT COOPERATION TREATY (PCT)

(19) World Intellectual Property Organization
International Bureau

(43) International Publication Date
12 September 2025 (12.09.2025)

WIPO | PCT

(10) International Publication Number
WO 2025/188565 A1

(51) International Patent Classification:
H04L 9/40 (2022.01) *H04L 9/32* (2006.01)

(21) International Application Number:
PCT/US2025/017865

(22) International Filing Date:
28 February 2025 (28.02.2025)

(25) Filing Language: English

(26) Publication Language: English

(30) Priority Data:
63/562,820 08 March 2024 (08.03.2024) US

(71) Applicant: **LANDIS+GYR TECHNOLOGY, INC.** [US/US]; 30000 Mill Creek Avenue, Suite 100, Alpharetta, Georgia 30022 (US).

(72) Inventors: **MITTAL, Narinder**; c/o Landis+Gyr Technology, Inc., 3000 Mill Creek Avenue, Suite 100, Alpharetta, Georgia 30022 (US). **CORNWALL, Craig**; c/o Landis+Gyr Technology, Inc., 30000 Mill Creek Avenue, Suite 100, Alpharetta, Georgia 30022 (US). **HARTMAN, James Paul**; c/o Landis+Gyr Technology, Inc., 3000 Mill Creek Avenue, Suite 100, Alpharetta, Georgia 30022 (US). **JOHNSON, Bryce D.**; c/o Landis+Gyr Technology, Inc., 30000 Mill Creek Avenue, Suite 100, Alpharetta, Georgia 30022 (US).

(74) Agent: **HARRIS, Christopher P.** et al.; 950 Main Avenue, Suite 710, Cleveland, Ohio 44113 (US).

(81) Designated States *(unless otherwise indicated, for every kind of national protection available)*: AE, AG, AL, AM, AO, AT, AU, AZ, BA, BB, BG, BH, BN, BR, BW, BY, BZ, CA, CH, CL, CN, CO, CR, CU, CV, CZ, DE, DJ, DK, DM, DO, DZ, EC, EE, EG, ES, FI, GB, GD, GE, GH, GM, GT, HN, HR, HU, ID, IL, IN, IQ, IR, IS, IT, JM, JO, JP, KE, KG, KH, KN, KP, KR, KW, KZ, LA, LC, LK, LR, LS, LU, LY, MA, MD, MG, MK, MN, MU, MW, MX, MY, MZ, NA,

(54) Title: SECURE REMOTE ACCESS OF COMPUTING DEVICE

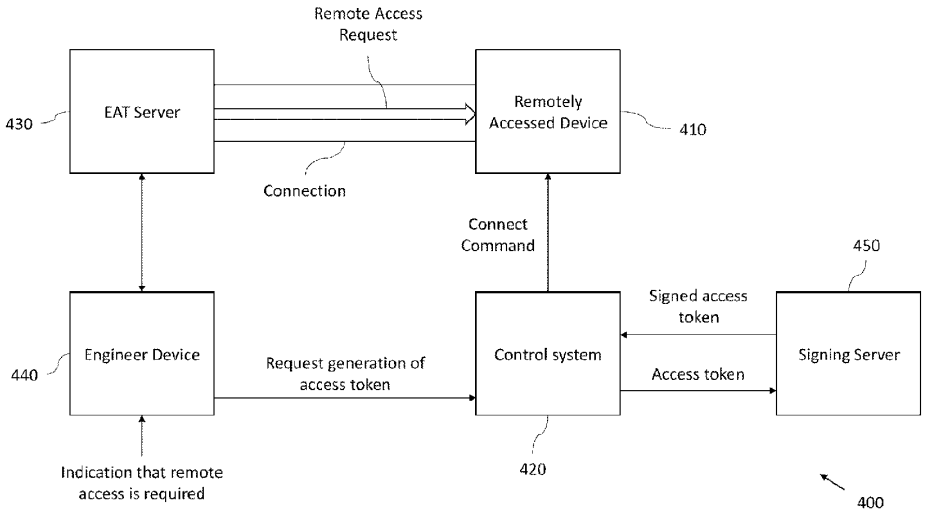

Figure 4

(57) Abstract: A computer system comprising a first device comprising at least one processor and a memory storing computer readable instructions, wherein the first device comprises an interface configured to receive a command to enable remote access to the device, the command comprising a signed token, wherein the at least one processor is configured to execute the computer readable instructions to: verify that the signed token has originated from a first server by verifying the signed token using a public key corresponding to a private key of the first server; in response to the verification of the signed token, send a request to initiate a connection to a second device identified in the token; following initiation of the connection, receiving via the connection, a request for remote access to the first device; and accepting the request for remote access.

[Continued on next page]

WO 2025/188565 A1

NG, NI, NO, NZ, OM, PA, PE, PG, PH, PL, PT, QA, RO, RS, RU, RW, SA, SC, SD, SE, SG, SK, SL, ST, SV, SY, TH, TJ, TM, TN, TR, TT, TZ, UA, UG, US, UY, UZ, VC, VN, WS, ZA, ZM, ZW.

(84) **Designated States** *(unless otherwise indicated, for every kind of regional protection available)*: ARIPO (BW, CV, GH, GM, KE, LR, LS, MW, MZ, NA, RW, SC, SD, SL, ST, SZ, TZ, UG, ZM, ZW), Eurasian (AM, AZ, BY, KG, KZ, RU, TJ, TM), European (AL, AT, BE, BG, CH, CY, CZ, DE, DK, EE, ES, FI, FR, GB, GR, HR, HU, IE, IS, IT, LT, LU, LV, MC, ME, MK, MT, NL, NO, PL, PT, RO, RS, SE, SI, SK, SM, TR), OAPI (BF, BJ, CF, CG, CI, CM, GA, GN, GQ, GW, KM, ML, MR, NE, SN, TD, TG).

Published:

— *with international search report (Art. 21(3))*