[Figure 1]

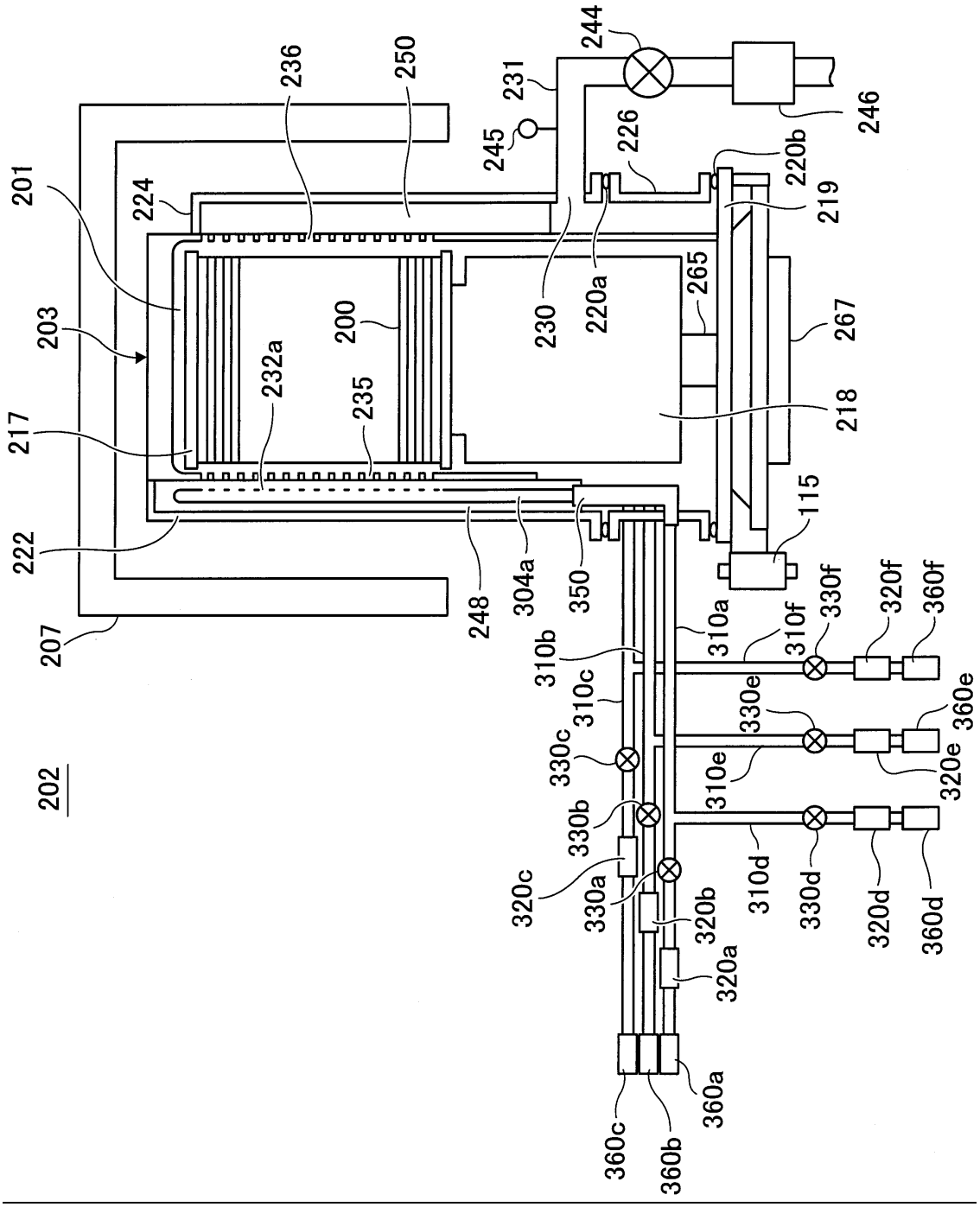
201
203
217
222
207
224
236
250
231
244
245
246
226
220b
219
230
220a
265
267
200
232a
235
218
115
248
304a
350
310a
310f
330f
320f
360f
310b
310c
330e
360e
330c
310e
320e
330b
310d
330d
320d
360d
320c
330a
320b
320a
360a
360c
360b
202

[Figure 9]

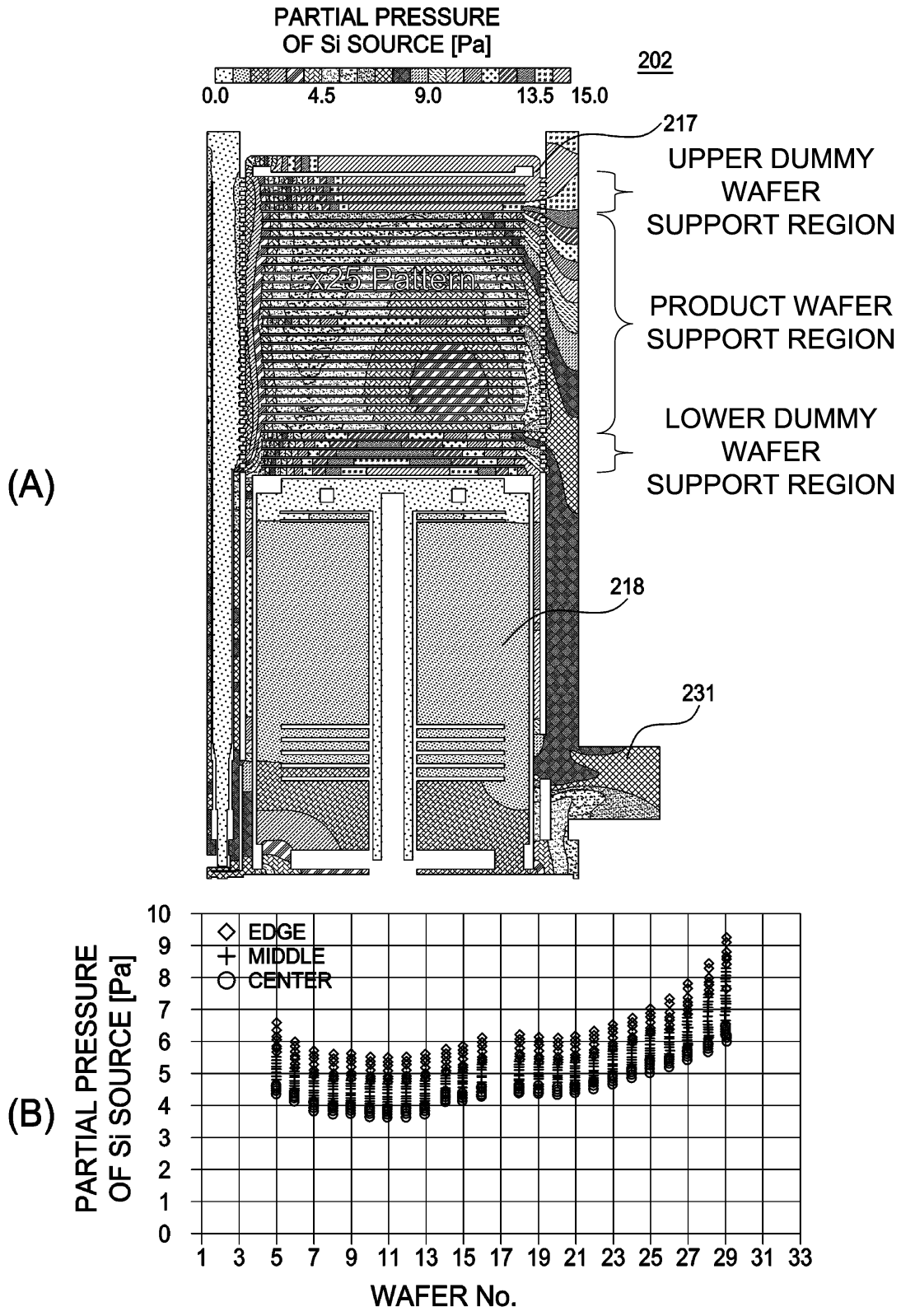
(A)
PARTIAL PRESSURE
OF Si SOURCE [Pa]
0.0
4.5
9.0
13.5
15.0
202
217
UPPER DUMMY
WAFER
SUPPORT REGION
x25 Pattern
PRODUCT WAFER
SUPPORT REGION
LOWER DUMMY
WAFER
SUPPORT REGION
218
231
(B)
PARTIAL PRESSURE
OF Si SOURCE [Pa]
EDGE
MIDDLE
CENTER
0
1
2
3
4
5
6
7
8
9
10
1 3 5 7 9 11 13 15 17 19 21 23 25 27 29 31 33
WAFER No.

[Figure 10]

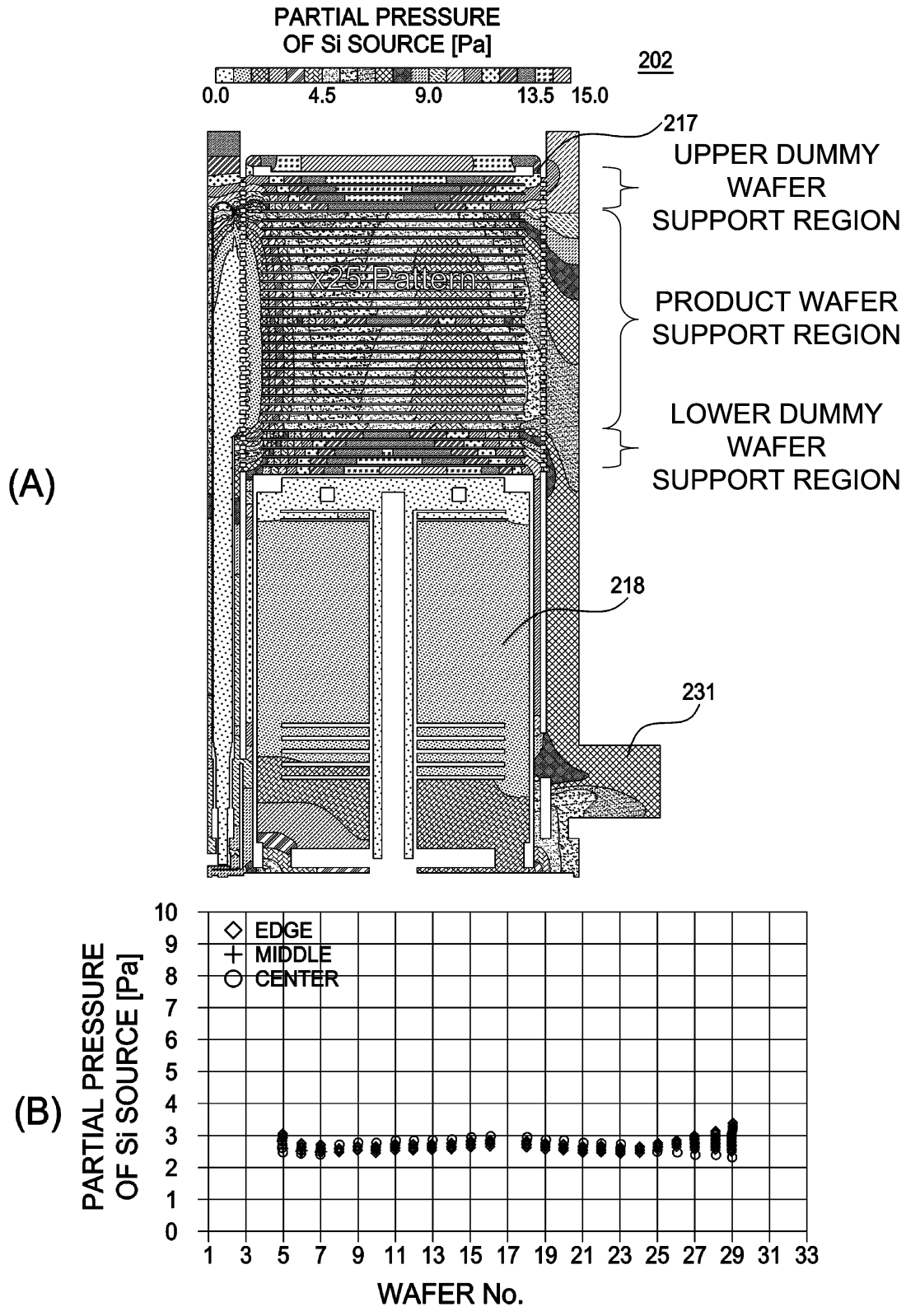
(A)
PARTIAL PRESSURE
OF Si SOURCE [Pa]
0.0
4.5
9.0
13.5
15.0
202
217
UPPER DUMMY
WAFER
SUPPORT REGION
PRODUCT WAFER
SUPPORT REGION
LOWER DUMMY
WAFER
SUPPORT REGION
218
231
(B)
PARTIAL PRESSURE
OF Si SOURCE [Pa]
EDGE
MIDDLE
CENTER
WAFER No.

[Figures]

[Figure 1]

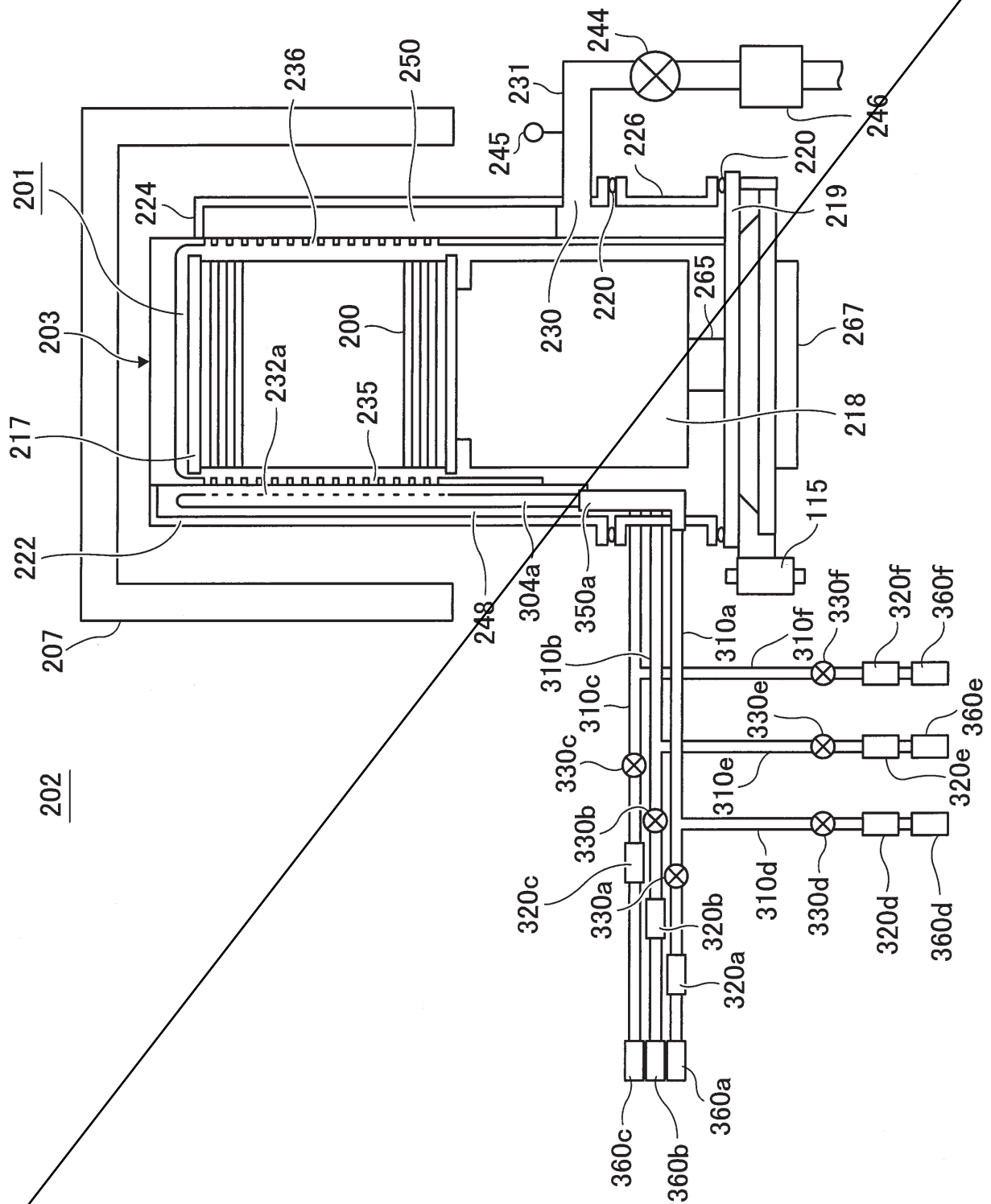

[Figure 9]

(A)

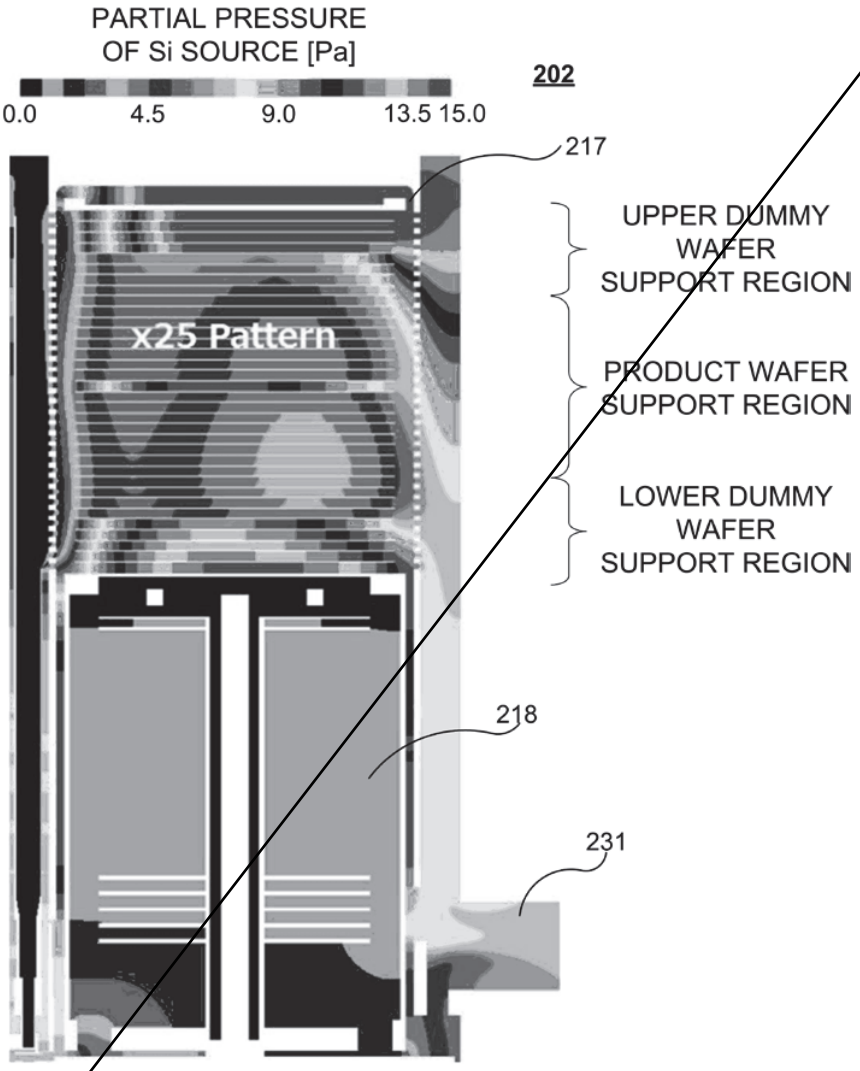
PARTIAL PRESSURE
OF Si SOURCE [Pa]
202
0.0
4.5
9.0
13.5
15.0
217
UPPER DUMMY
WAFER
SUPPORT REGION
x25 Pattern
PRODUCT WAFER
SUPPORT REGION
LOWER DUMMY
WAFER
SUPPORT REGION
218
231

(B)

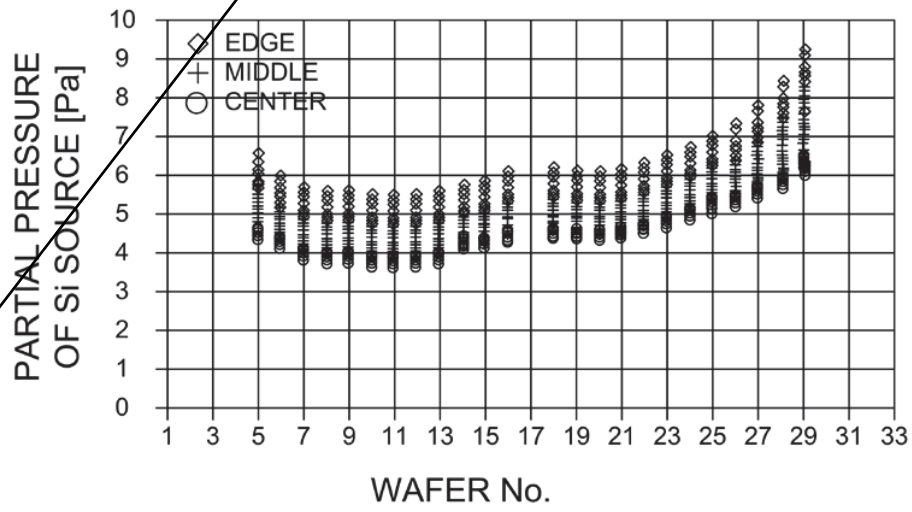
PARTIAL PRESSURE
OF Si SOURCE [Pa]
EDGE
MIDDLE
CENTER
0
1
2
3
4
5
6
7
8
9
10
1
3
5
7
9
11
13
15
17
19
21
23
25
27
29
31
33
WAFER No.

[Figure 10]

(A)

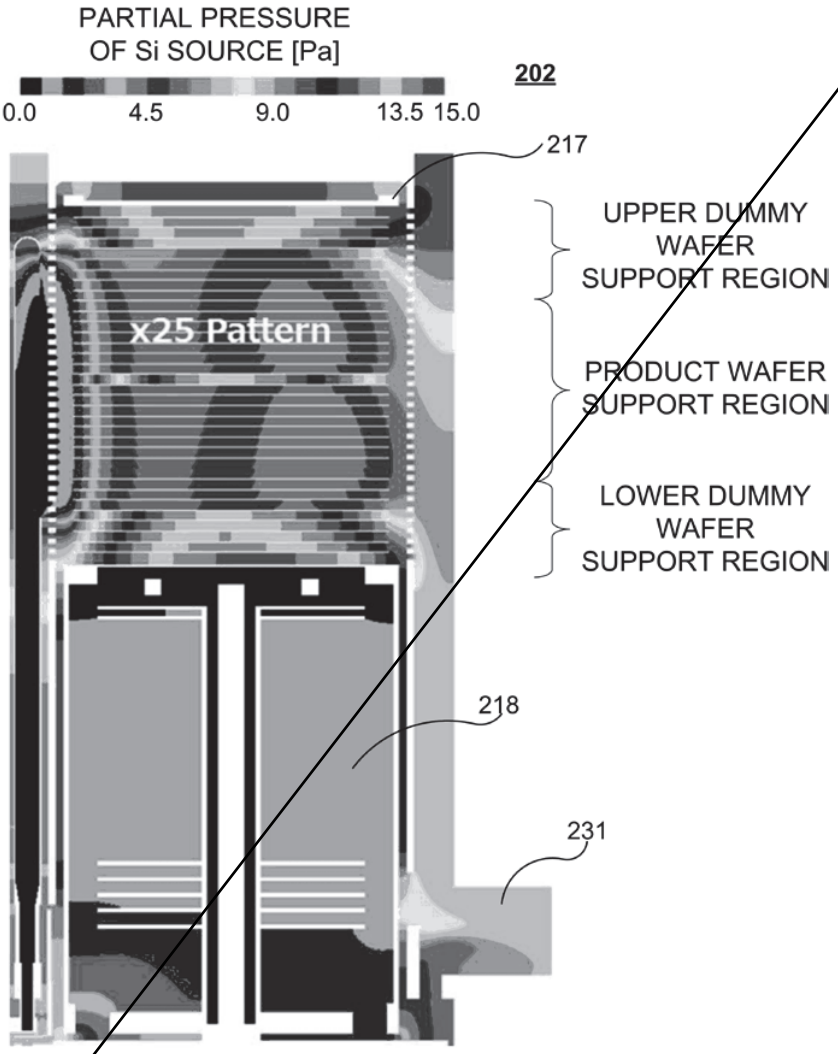
PARTIAL PRESSURE
OF Si SOURCE [Pa]
202
0.0
4.5
9.0
13.5
15.0
217
UPPER DUMMY WAFER SUPPORT REGION
x25 Pattern
PRODUCT WAFER SUPPORT REGION
LOWER DUMMY WAFER SUPPORT REGION
218
231

(B)

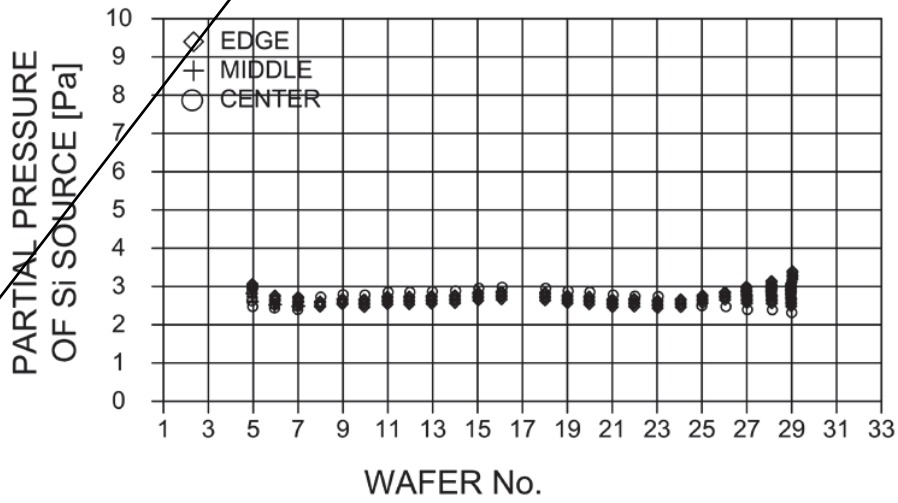
PARTIAL PRESSURE
OF Si SOURCE [Pa]
EDGE
MIDDLE
CENTER
0
1
2
3
4
5
6
7
8
9
10
1 3 5 7 9 11 13 15 17 19 21 23 25 27 29 31 33
WAFER No.