FIG.1

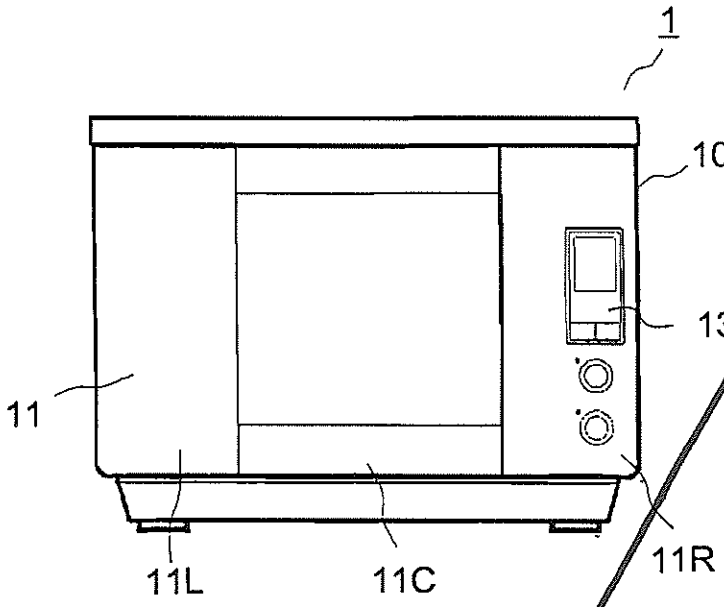

FIG.2

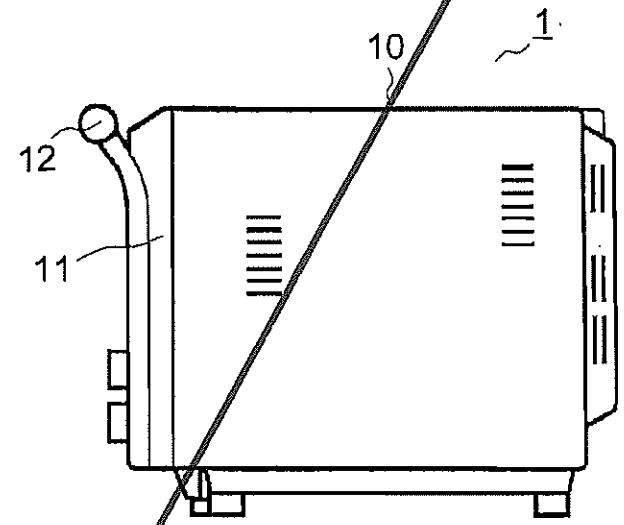

FIG.3

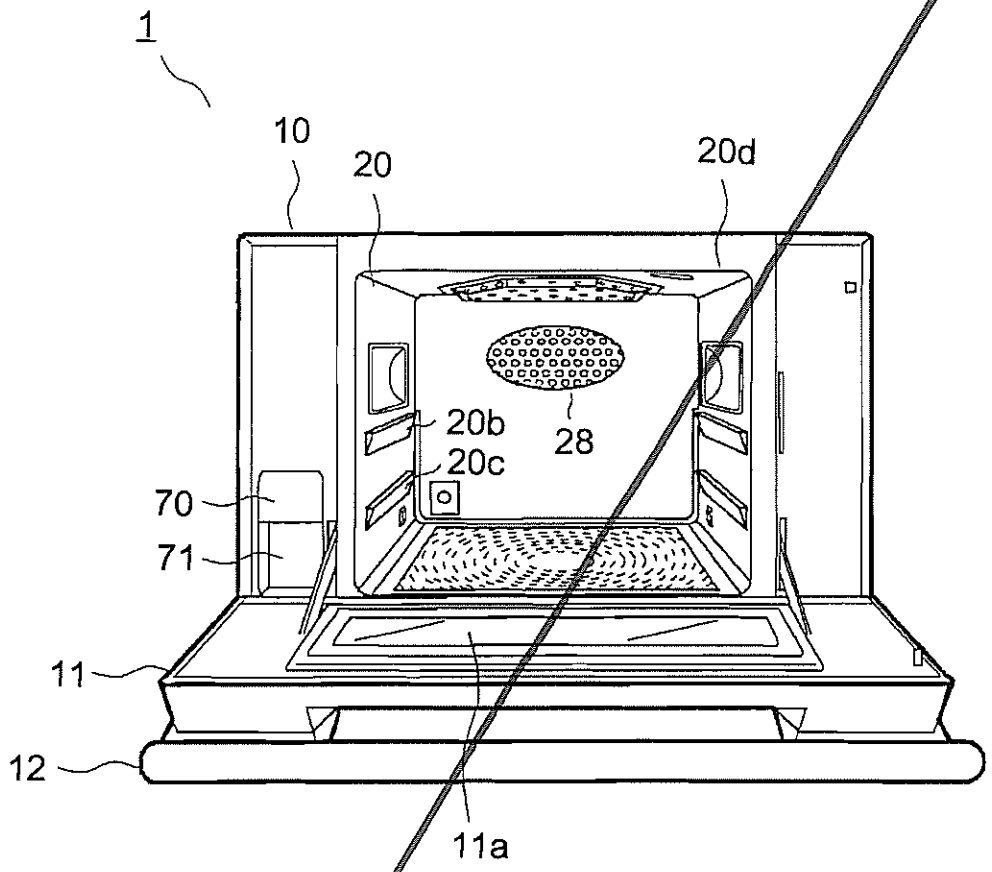

FIG.4

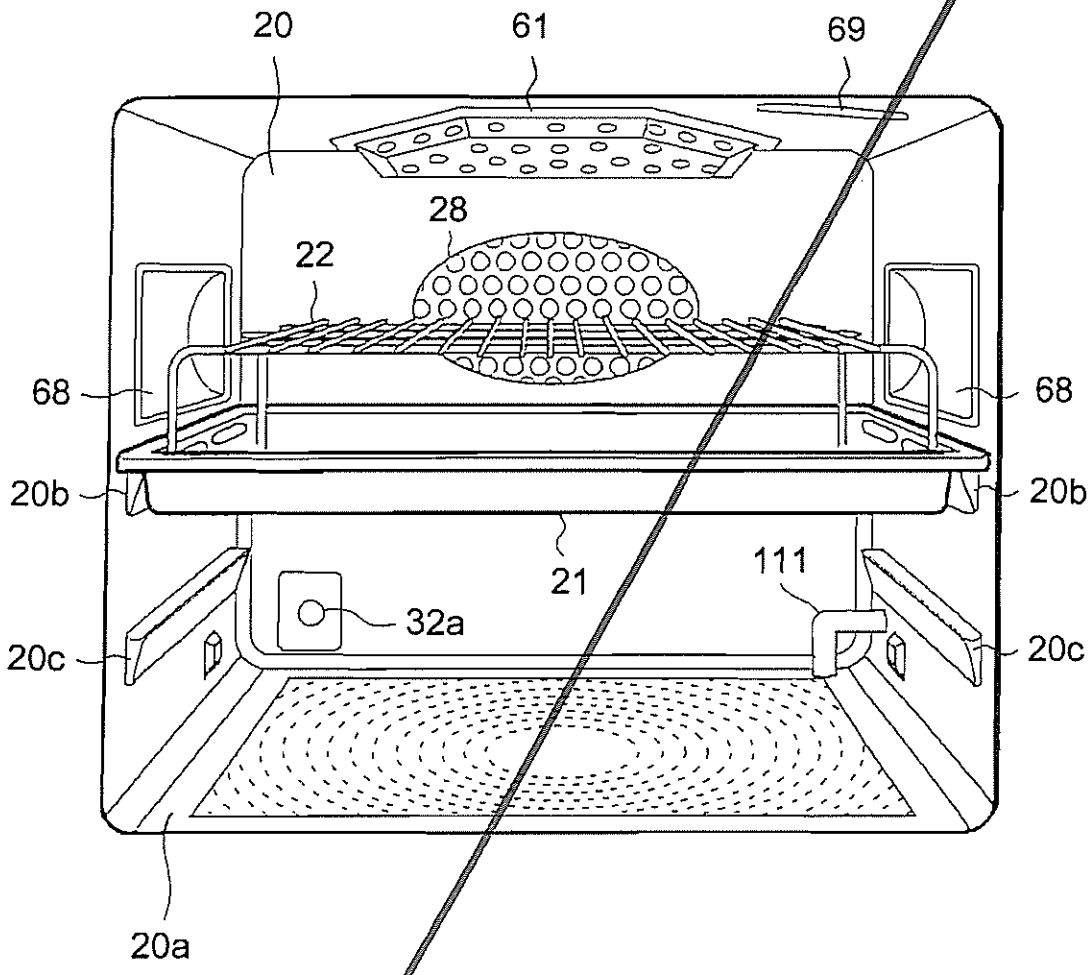

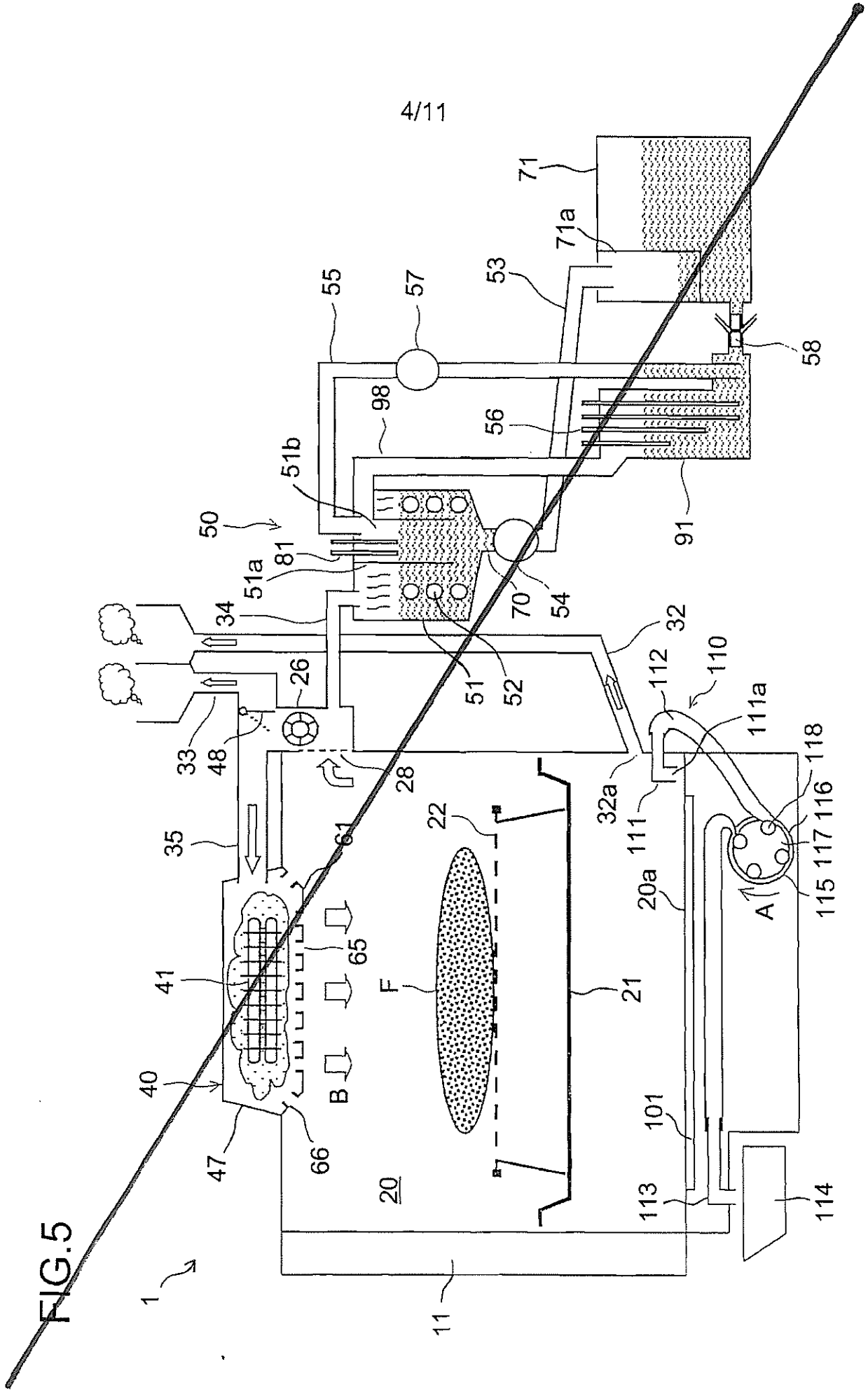
1
11
20
20a
21
22
26
28
32
32a
33
34
35
40
41
47
48
50
51
51a
51b
52
53
54
55
56
57
58
61
65
66
70
71
71a
81
91
98
101
110
111
111a
112
113
114
115
116
117
118
A
B
F

FIG.5

FIG.6

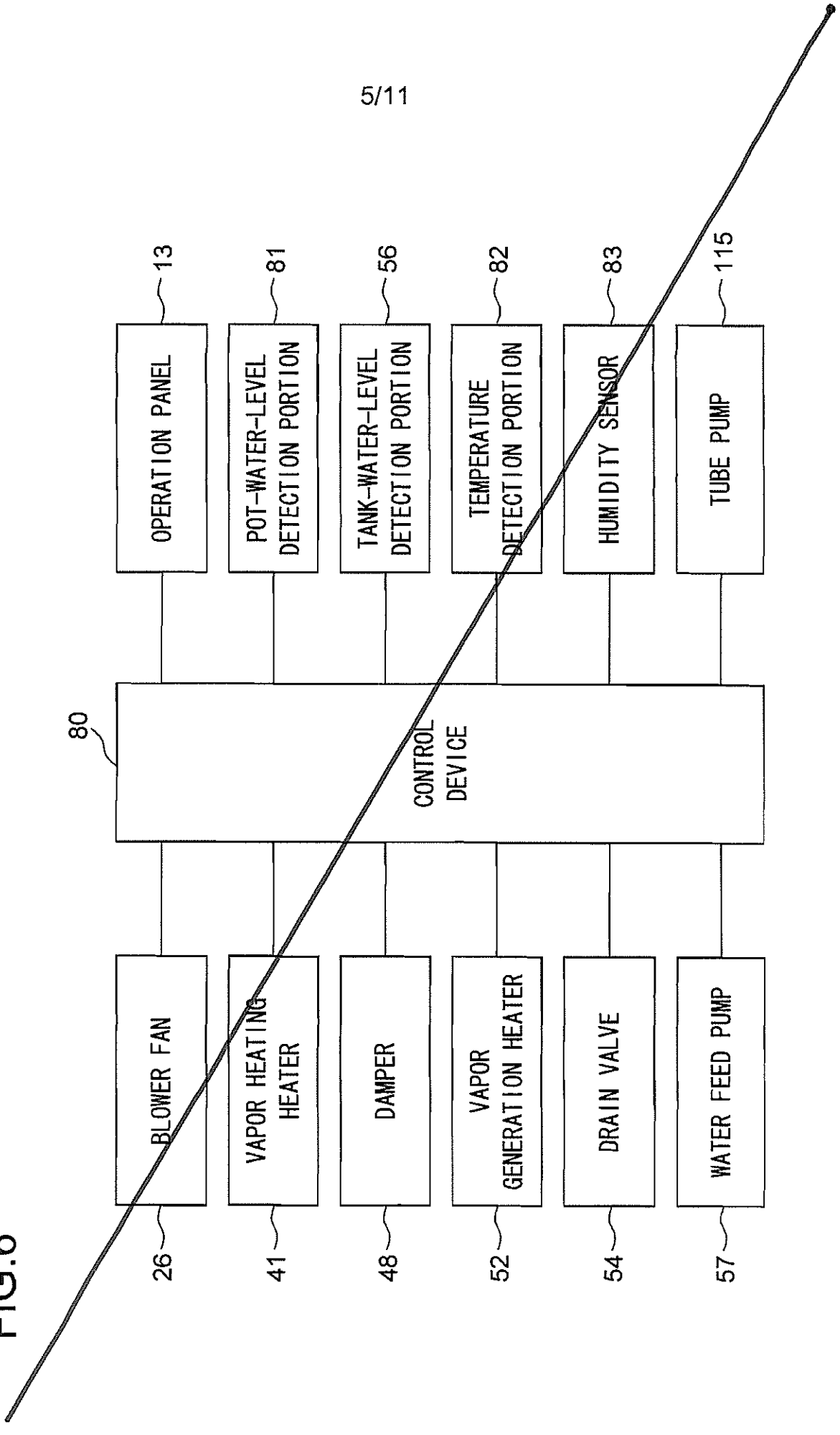
80
CONTROL DEVICE
13
OPERATION PANEL
81
POT-WATER-LEVEL DETECTION PORTION
56
TANK-WATER-LEVEL DETECTION PORTION
82
TEMPERATURE DETECTION PORTION
83
HUMIDITY SENSOR
115
TUBE PUMP
26
BLOWER FAN
41
VAPOR HEATING HEATER
48
DAMPER
52
VAPOR GENERATION HEATER
54
DRAIN VALVE
57
WATER FEED PUMP

FIG.7

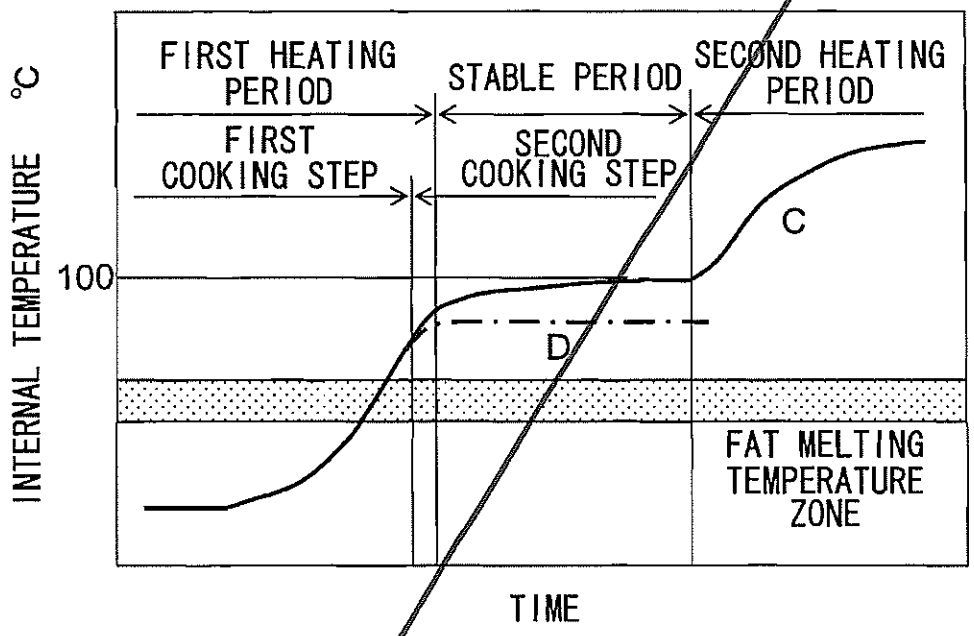
FIRST HEATING PERIOD
STABLE PERIOD
SECOND HEATING PERIOD
FIRST COOKING STEP
SECOND COOKING STEP
INTERNAL TEMPERATURE °C
100
C
D
FAT MELTING TEMPERATURE ZONE
TIME

FIG.8

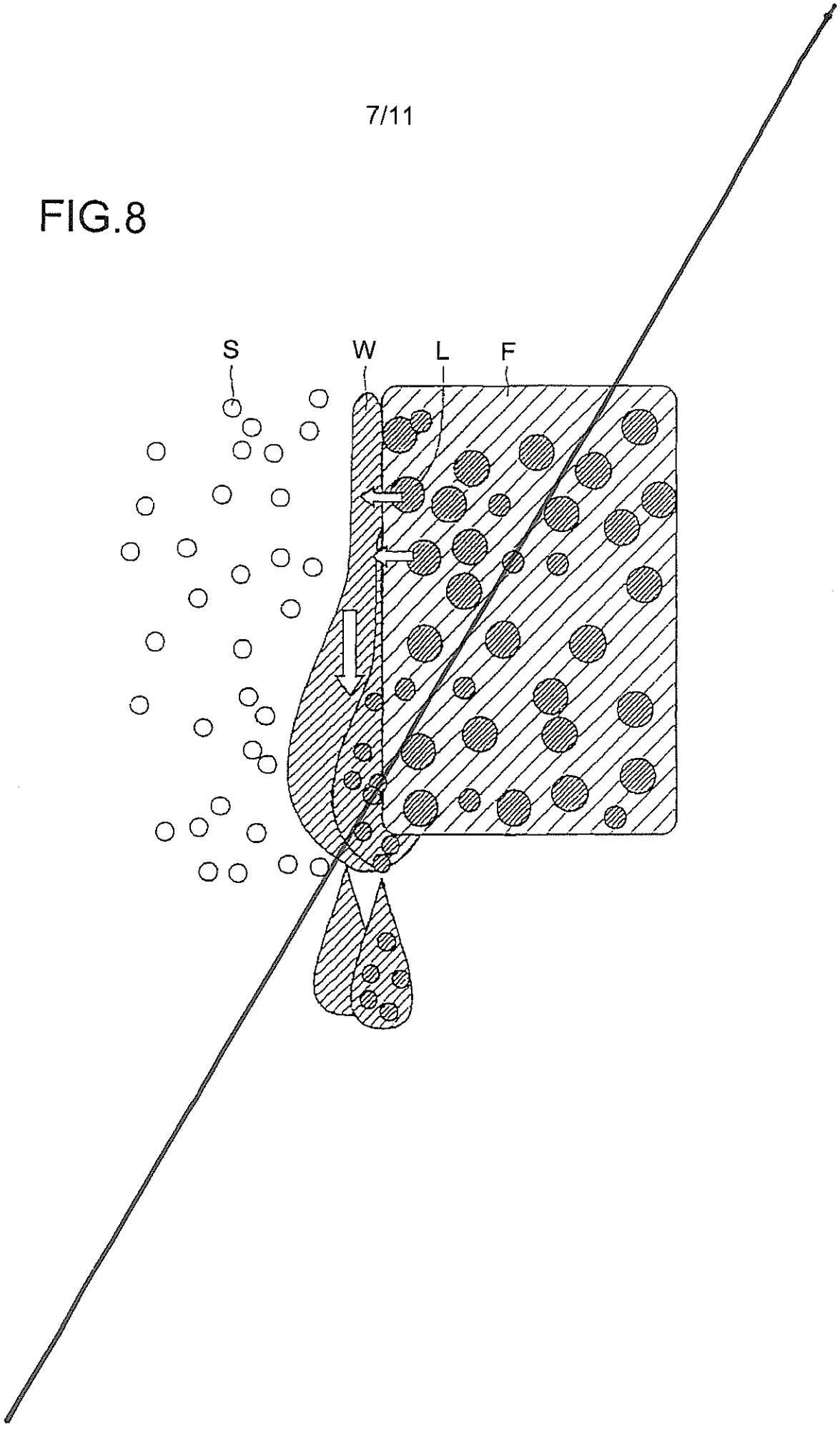

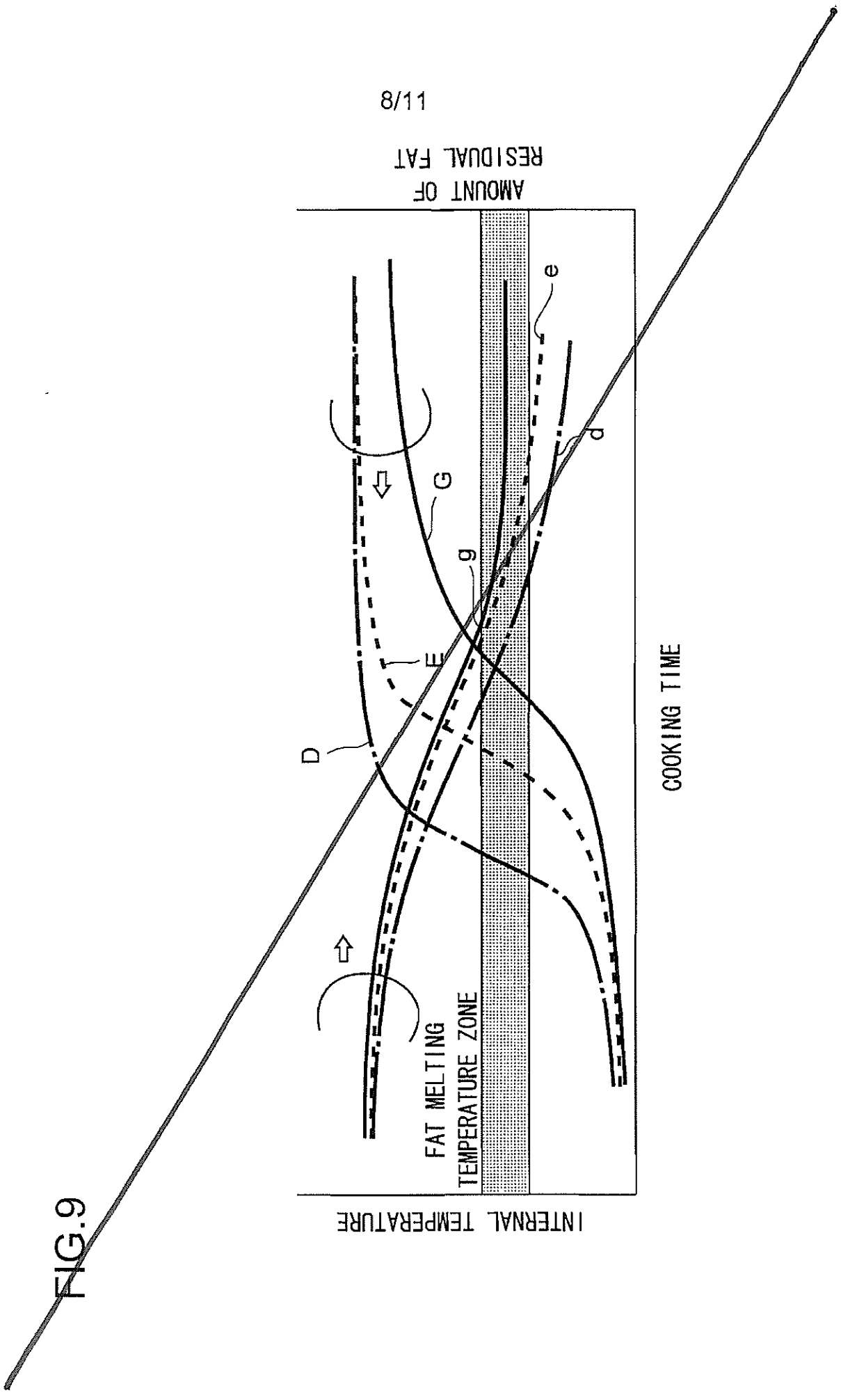
AMOUNT OF
RESIDUAL FAT
INTERNAL TEMPERATURE
COOKING TIME
FAT MELTING
TEMPERATURE ZONE
D
E
G
g
d
e

FIG.9

FIG.10

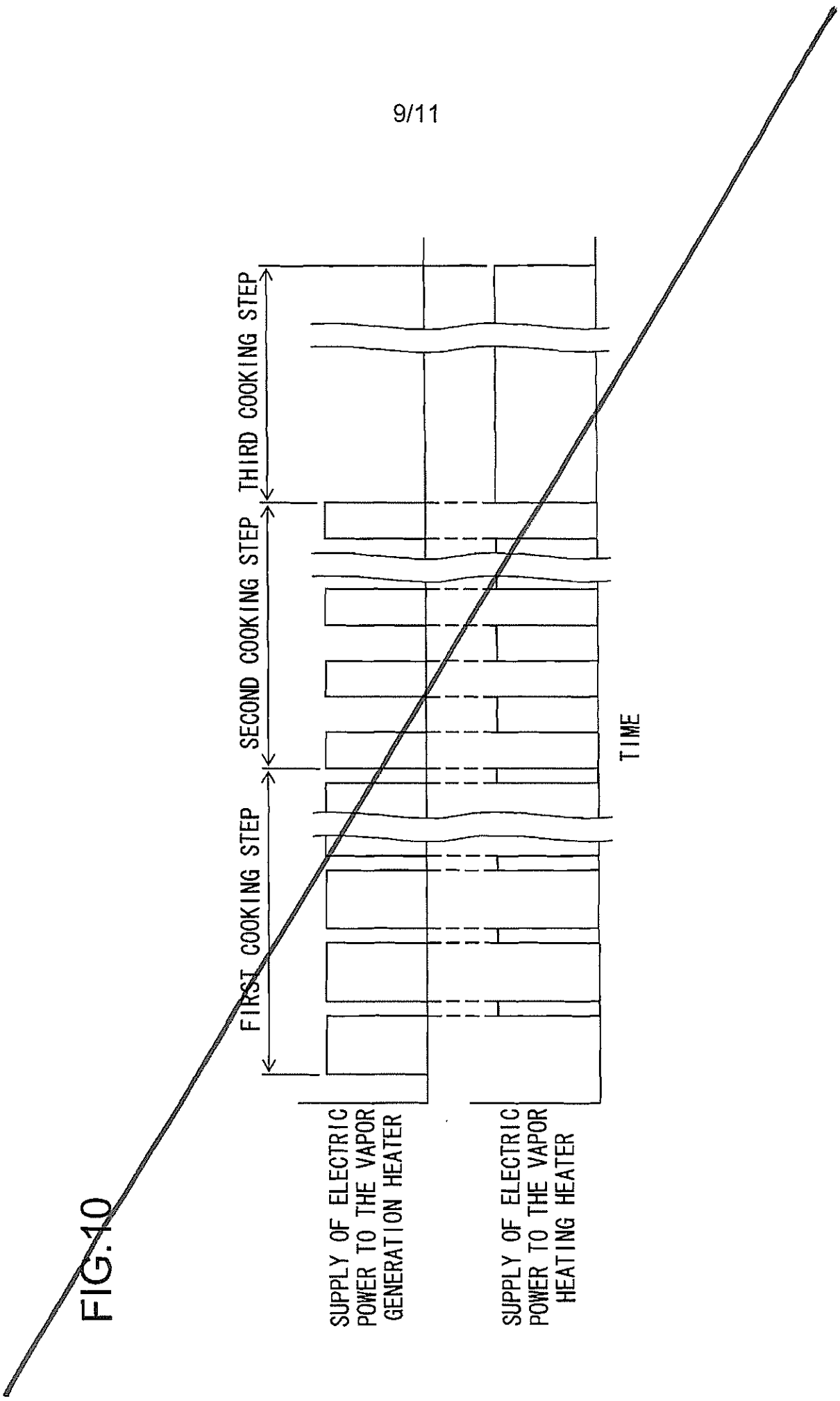
FIRST COOKING STEP
SECOND COOKING STEP
THIRD COOKING STEP
SUPPLY OF ELECTRIC POWER TO THE VAPOR GENERATION HEATER
SUPPLY OF ELECTRIC POWER TO THE VAPOR HEATING HEATER
TIME

FIG.11

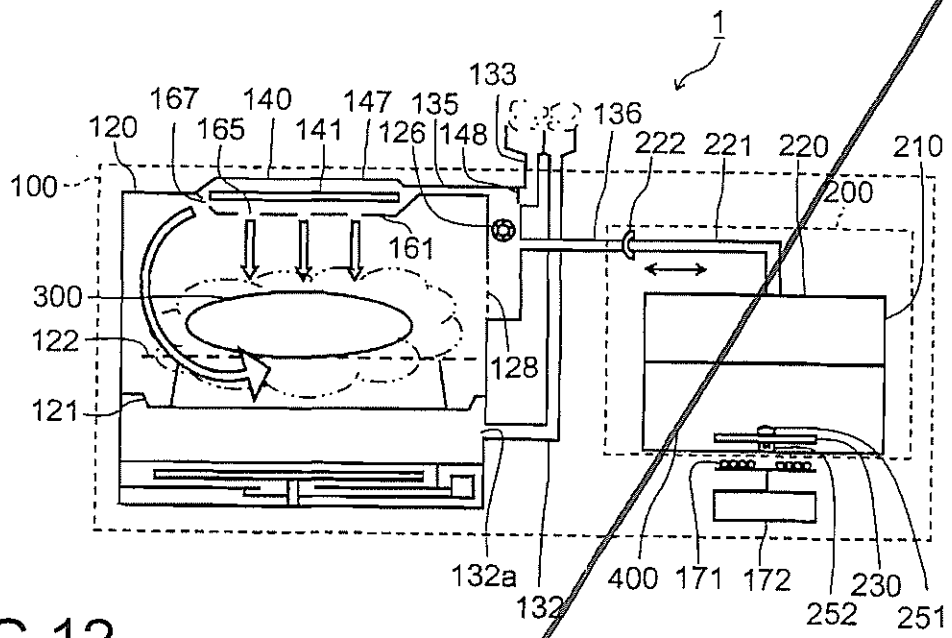

FIG.12

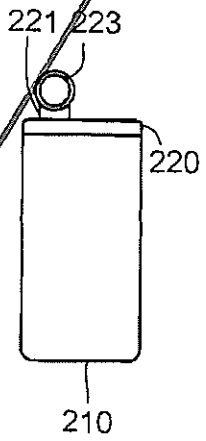

FIG.13

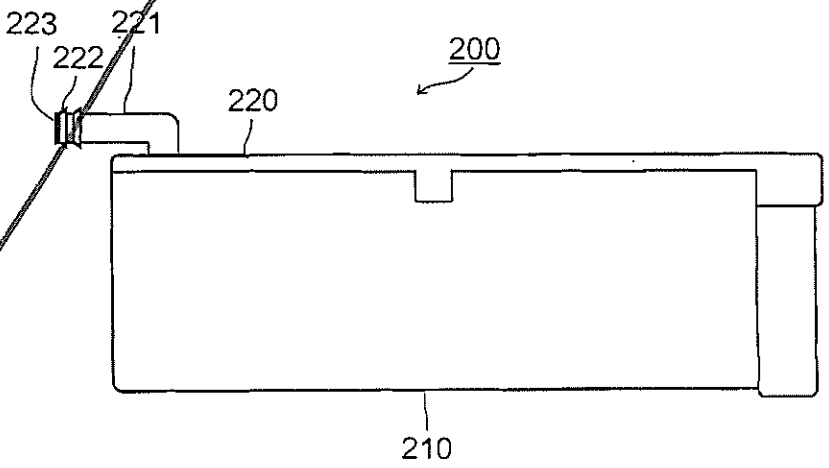

FIG.14

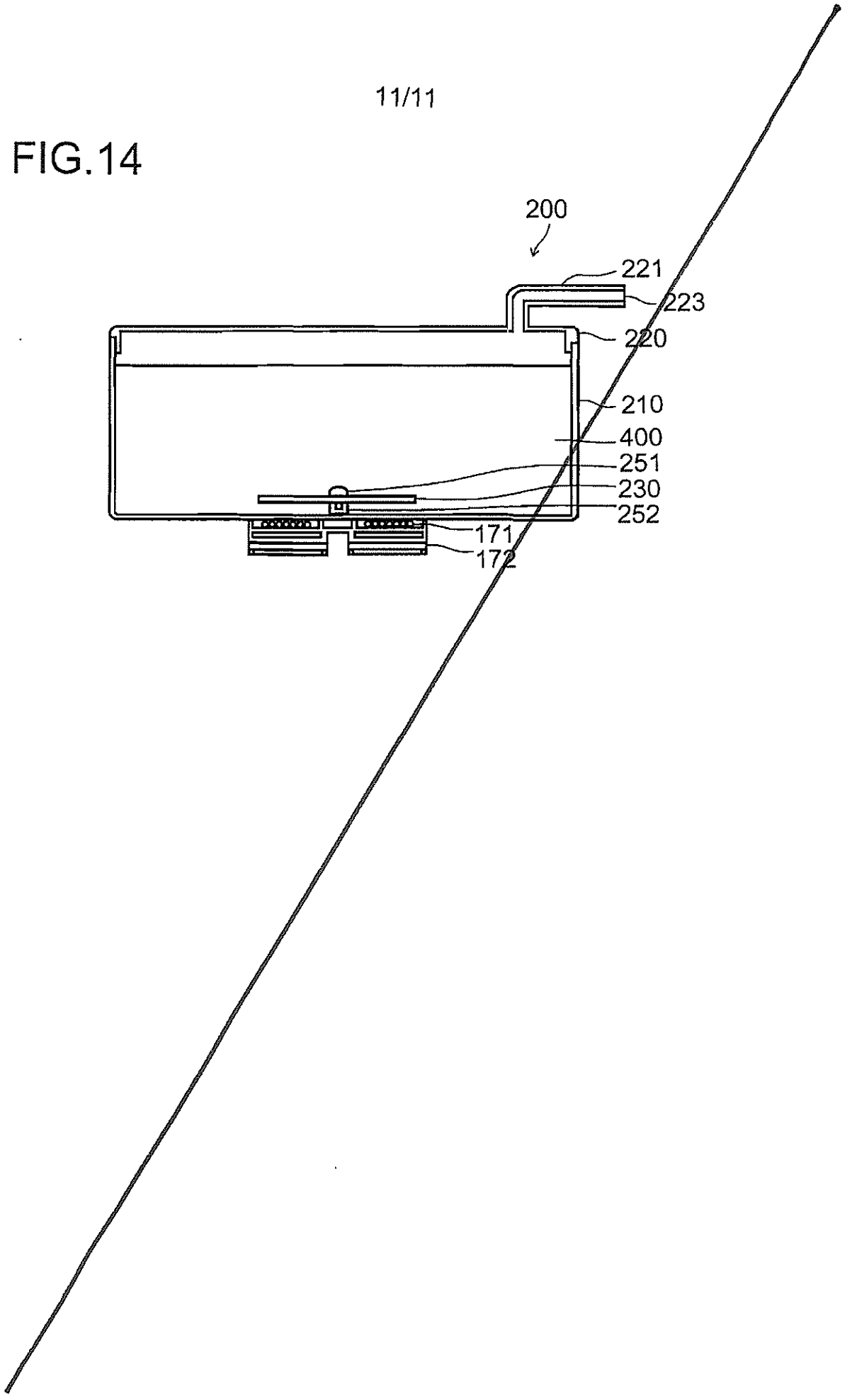

FIG.1

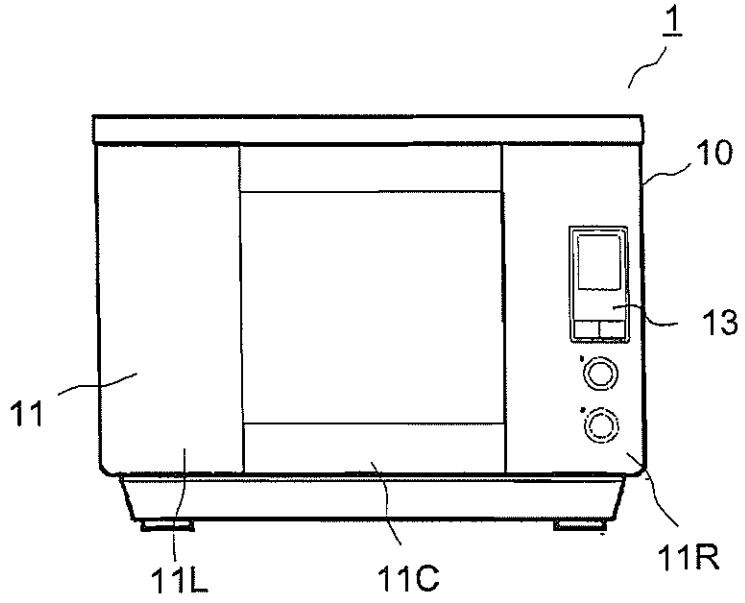

FIG.2

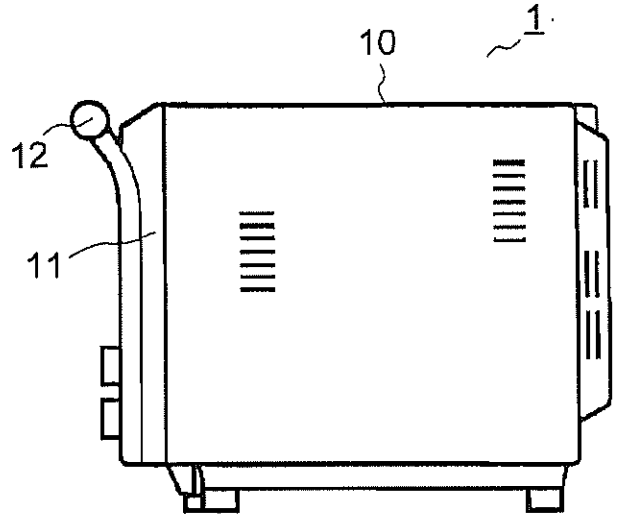

FIG.3

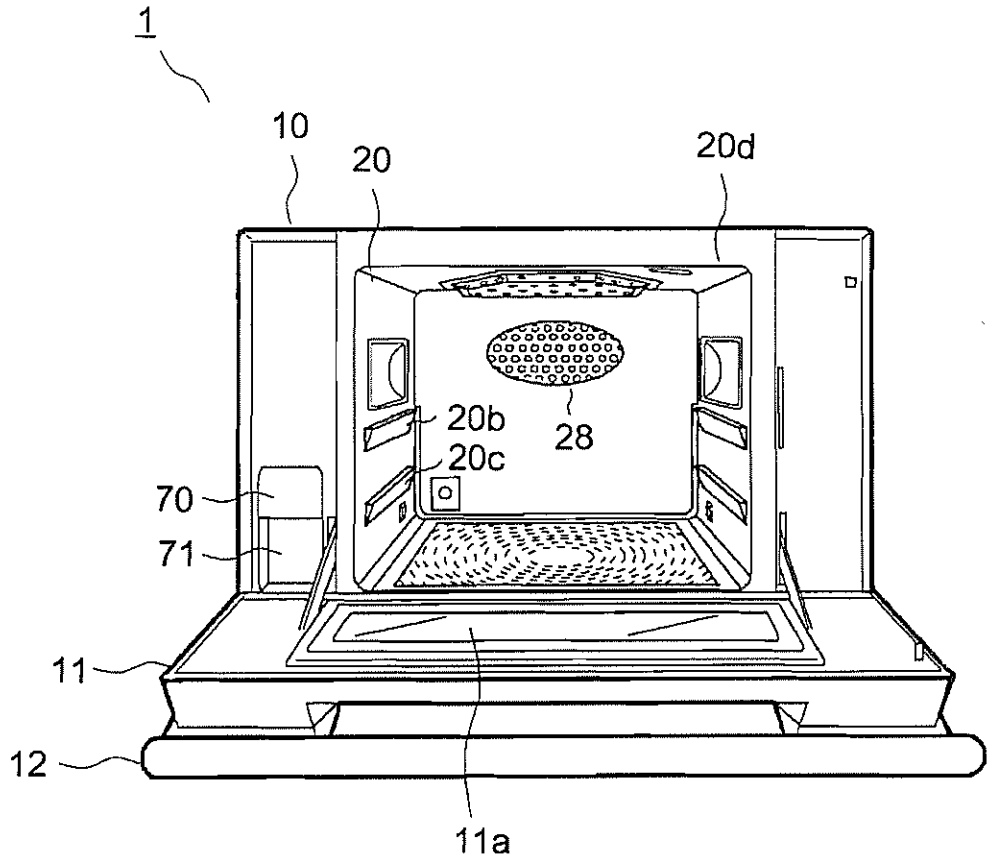

FIG.4

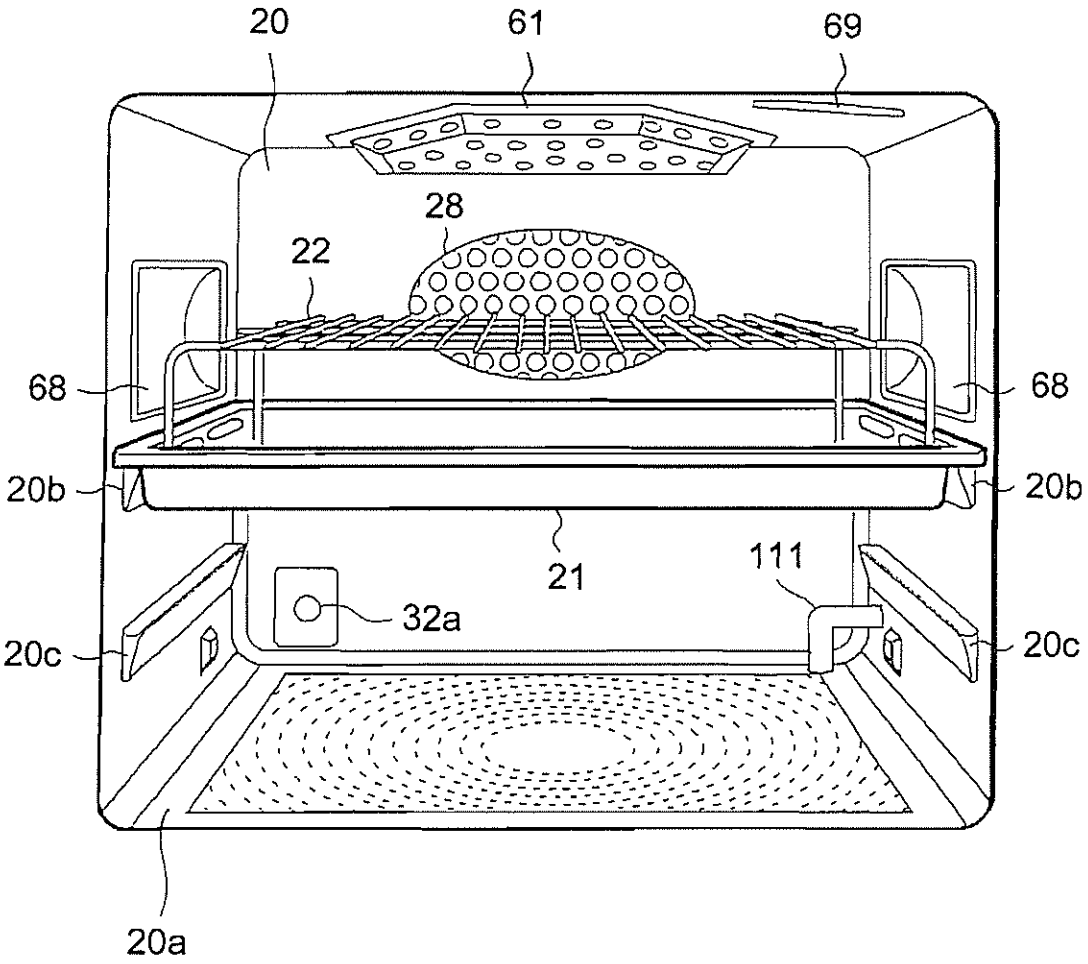

FIG.5

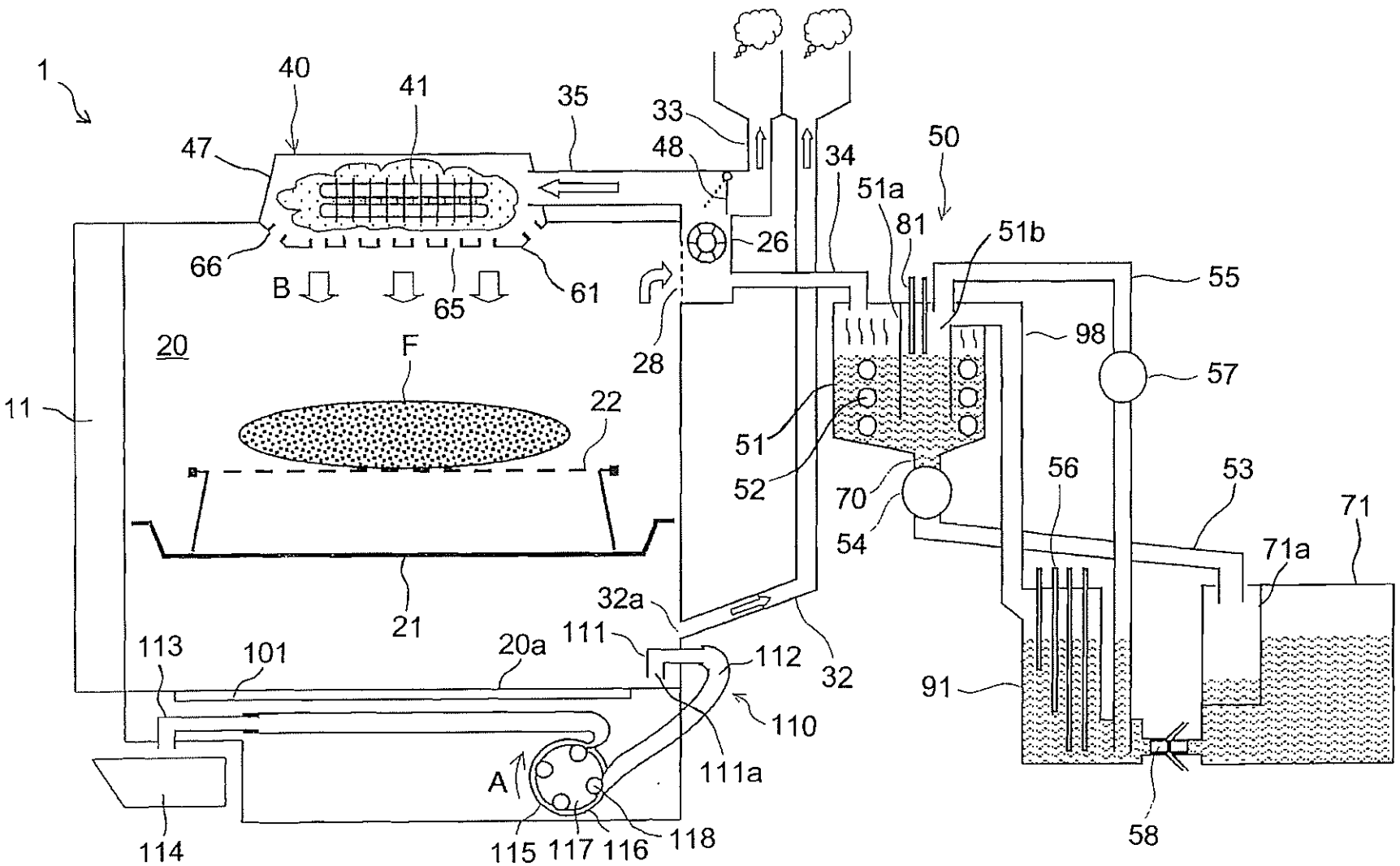
1
40
41
35
33
48
34
50
47
51a
81
51b
26
66
B
65
61
55
98
20
F
28
57
11
22
51
52
70
56
53
71
54
71a
21
32a
111
112
32
113
101
20a
91
110
111a
A
114
115
117
116
118
58

FIG.6

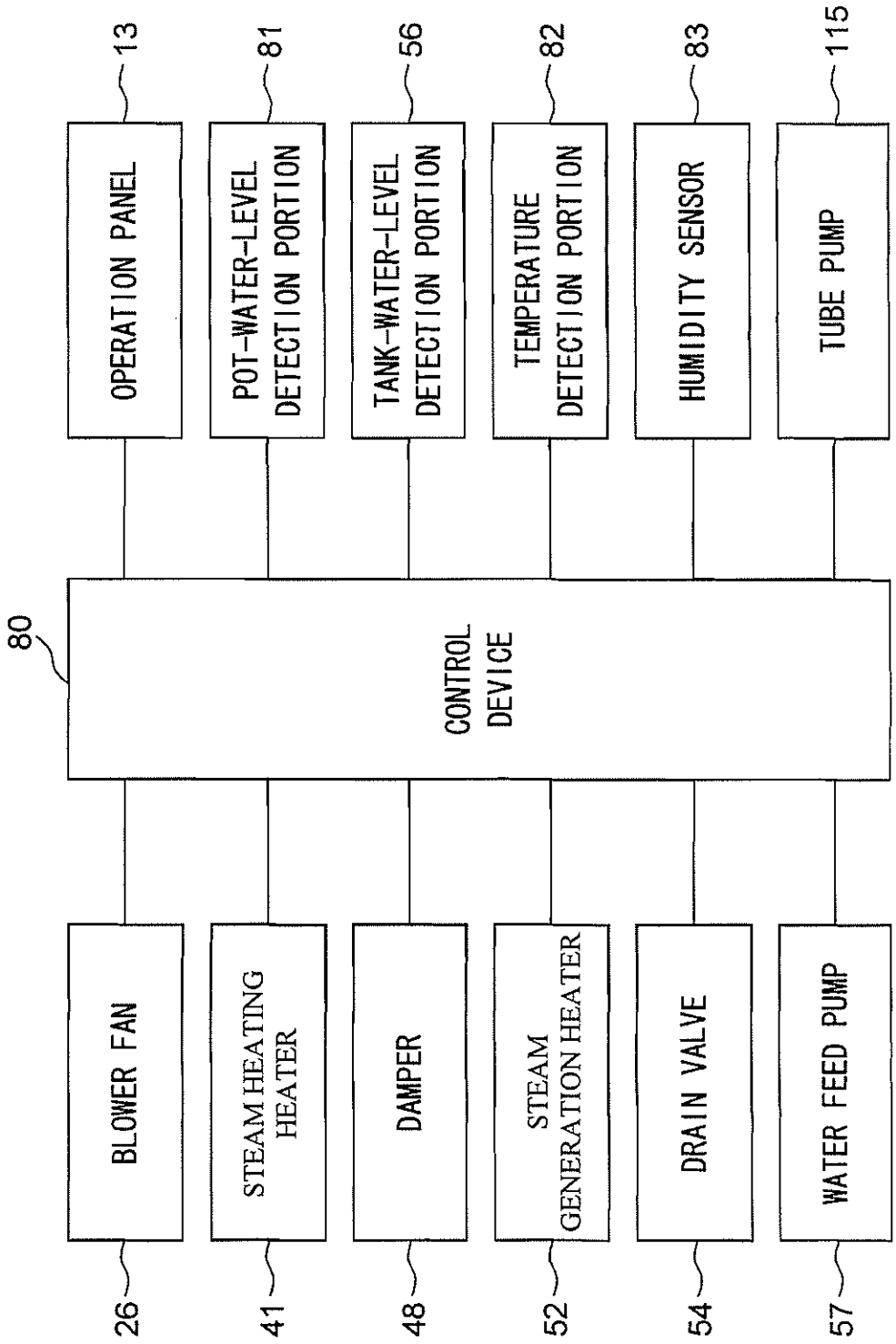
80
CONTROL DEVICE
13
OPERATION PANEL
81
POT-WATER-LEVEL DETECTION PORTION
56
TANK-WATER-LEVEL DETECTION PORTION
82
TEMPERATURE DETECTION PORTION
83
HUMIDITY SENSOR
115
TUBE PUMP
26
BLOWER FAN
41
STEAM HEATING HEATER
48
DAMPER
52
STEAM GENERATION HEATER
54
DRAIN VALVE
57
WATER FEED PUMP

FIG.7

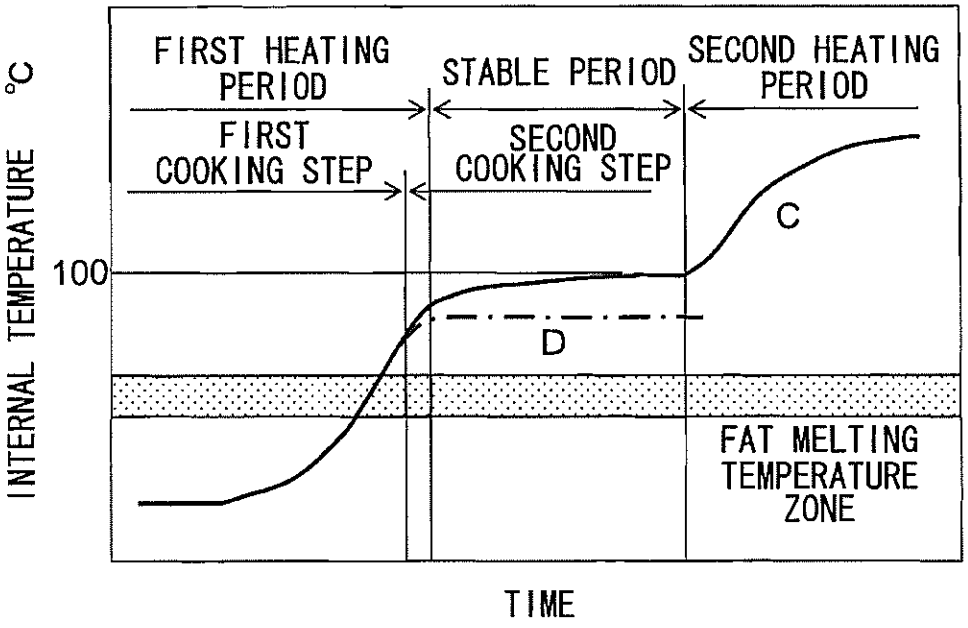
FIRST HEATING PERIOD
STABLE PERIOD
SECOND HEATING PERIOD
FIRST COOKING STEP
SECOND COOKING STEP
INTERNAL TEMPERATURE °C
100
C
D
FAT MELTING TEMPERATURE ZONE
TIME

FIG.8

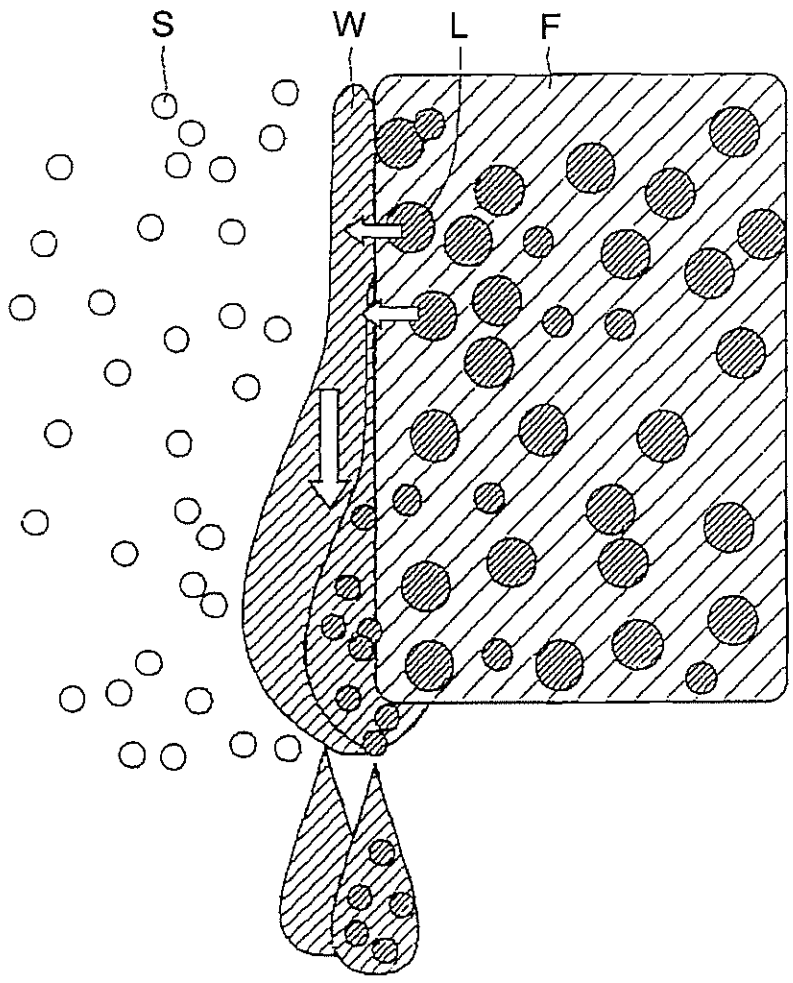

FIG.9

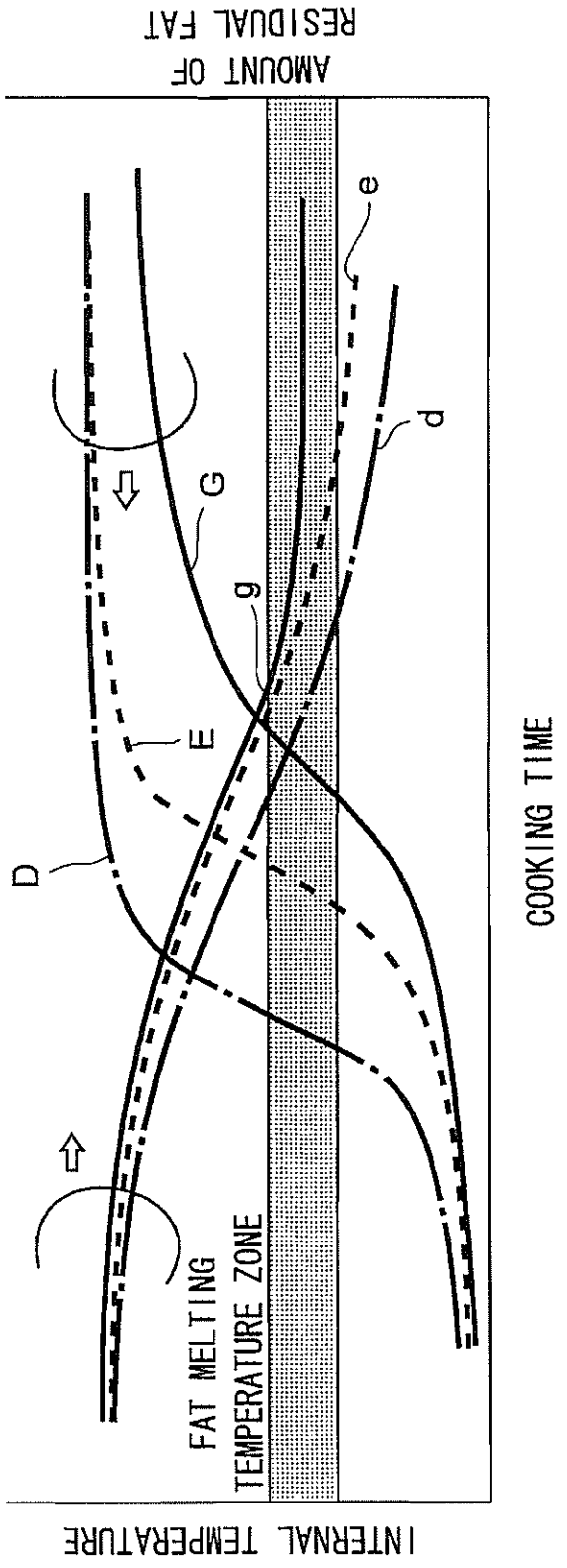
AMOUNT OF
RESIDUAL FAT
INTERNAL TEMPERATURE
COOKING TIME
FAT MELTING
TEMPERATURE ZONE
D
E
G
g
d
e

FIG.10

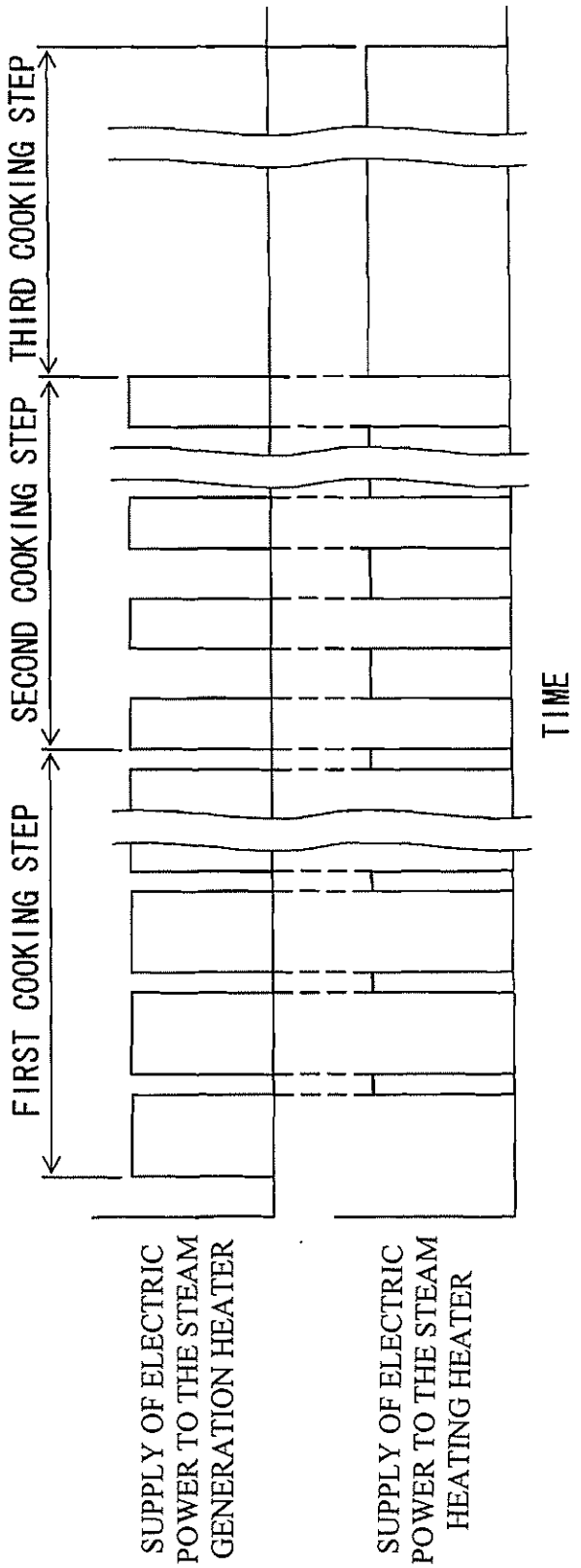
FIRST COOKING STEP
SECOND COOKING STEP
THIRD COOKING STEP
TIME
SUPPLY OF ELECTRIC POWER TO THE STEAM GENERATION HEATER
SUPPLY OF ELECTRIC POWER TO THE STEAM HEATING HEATER

FIG.11

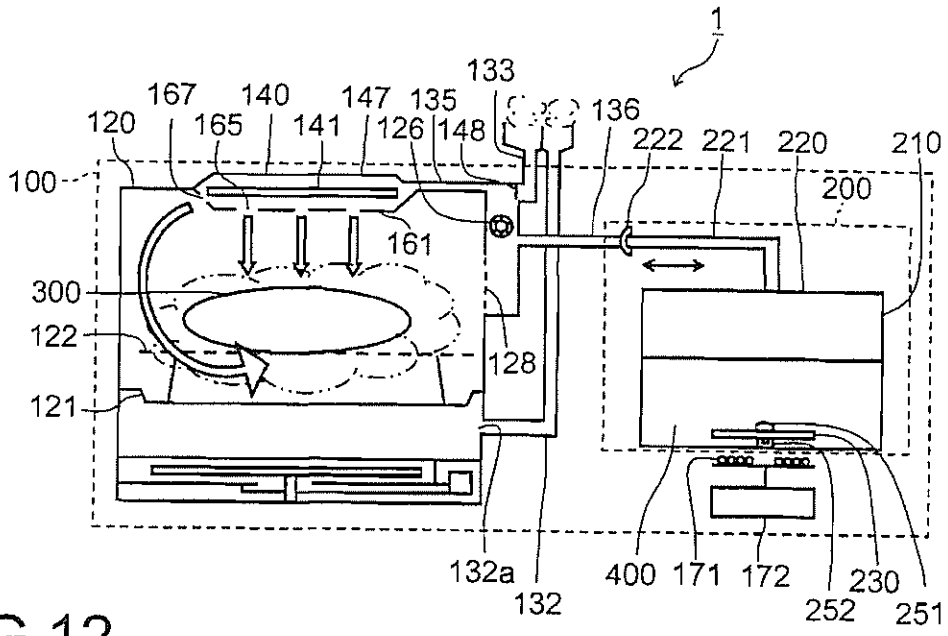

FIG.12

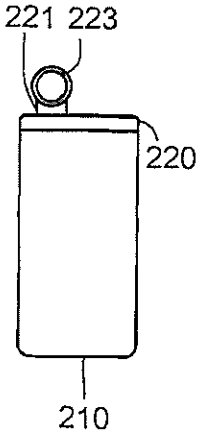

FIG.13

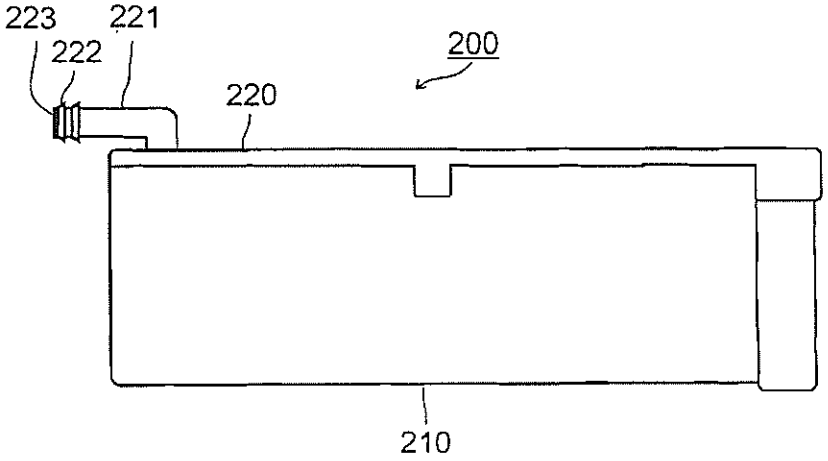

FIG.14

