Claims

1. A compound of formula (II):

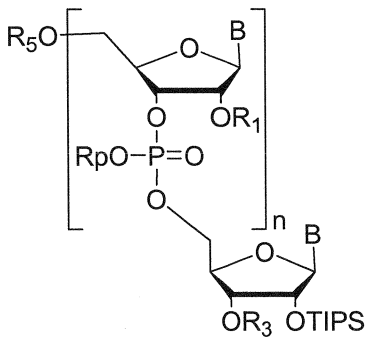

(II)

wherein

n is an integer from 1 to 19;

R_1 is a protecting group;

R_3 is selected from H, a protecting group, or 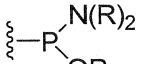 ,wherein the protecting group is a levulinyl group or an ionic tag;

R_5 is selected from H, or a protecting group;

R_p is a protecting group;

R is ~~lower~~ alkyl, or the $N(R)_2$ moiety is a cyclic alkylamine, or a substituted cyclic alkylamine, preferably morpholine;

B is a nitrogen-containing base;

wherein each B, R_1 and R_p may be the same or different from any other B, R_1 and R_p, respectively.

2. The compound of claim 1, wherein n is selected from 1, 2, or 3.

8. The compound of claim 7, wherein the ionic tag is selected from:

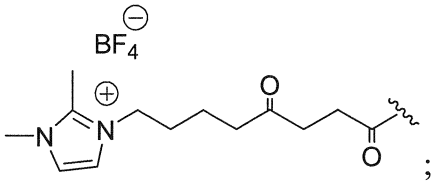

;

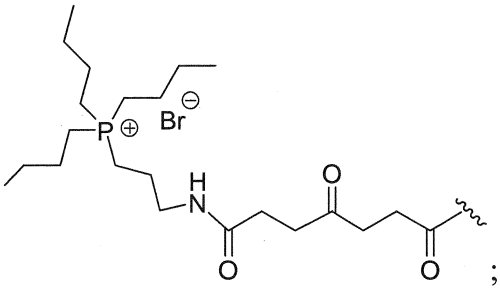

; or

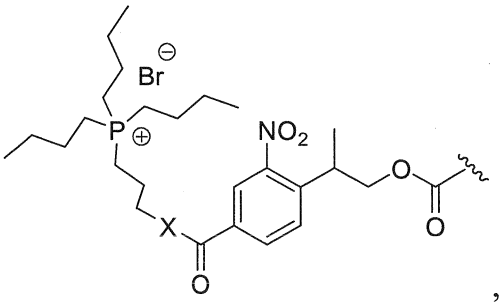

, wherein X is selected from NH or O.

9. The compound of any one of claims ~~5~~ 6 to 8, wherein:

R_1 is TBDMS;

R_5 is selected from DMTr or MMTr; and

B is a nucleobase protected on at least one nitrogen by a suitable N-protecting group,

preferably the N-protecting group is selected from levulinyl, acetyl, difluoroacetyl, trifluoroacetyl, isobutyryl, benzoyl, 9-fluorenylmethoxycarbonyl, phenoxyacetyl, dimethylformamidine, or N,N-diphenyl carbamate.

10. The compound of any one of claims 1 to 9, wherein R_5 is DMTr, and R_p is methyl.

11. A process for preparing a compound of formula (II):

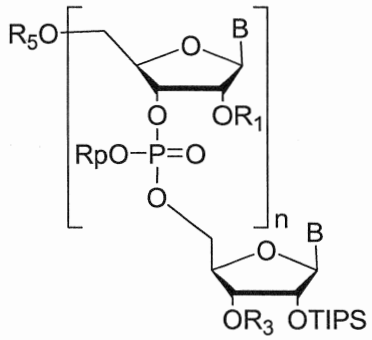

(II)

wherein

n is selected from 1, 2, or 3;

R_1 is a protecting group;

R_3 is selected from H or a protecting group, wherein the protecting group is a levulinyl group or an ionic tag;

R_5 is a protecting group;

R_p is a protecting group;

B is a nitrogen-containing base;

wherein each B, R_1 and R_p may be the same or different from any other B, R_1 and R_p, respectively;

the process comprising the steps of:

a) condensing a phosphoramidite of formula (III):

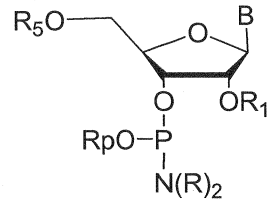

(III)

wherein B, R_1, R_5, and R_p are as defined above; and

R is ~~lower~~ alkyl, or the $N(R)_2$ moiety is a cyclic alkylamine, or a substituted cyclic alkylamine, preferably morpholine;

with a nucleoside of formula (IV):

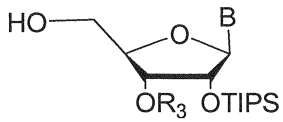

(IV)

wherein B and R_3 are as defined above; and

b) oxidizing the product of step (a) to produce the compound of formula (II) where n is 1, and B, R_1, R_3, R_5, and R_p are as defined above; and

c) where n>1, the process further comprising:

(i) deprotecting the terminal $-OR_5$ group of the product of the previous step to form a free 5'-OH group;

(ii) condensing the product of step (i) with a phosphoramidite of formula (III), wherein B, R_1, R_5, R_p and R are as defined above, and each B, R_1,

R_5, R_p and R may be the same or different from any other B, R_1, R_5, R_p and R, respectively;

(iii) oxidizing the product of step (ii);

(iv) repeating steps (i)-(iii) n-2 times;

to form the compound of formula (II).

12. The process of claim 11, wherein R_3 is H.

13. The process of claim 11, wherein R_3 is a protecting group, the process further comprising:

d) removal of the R_3 protecting group.

14. The process of claim 13, wherein the protecting group is a levulinyl ~~Lev~~ group.

15. The process of claim 13, wherein the protecting group is an ionic tag.

16. The process of claim 15, wherein the ionic tag is selected from:

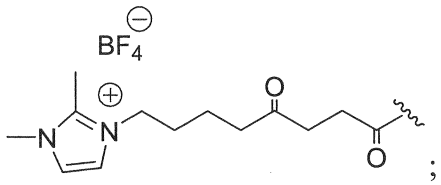

;

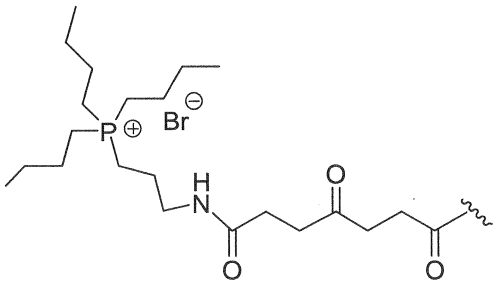

; or

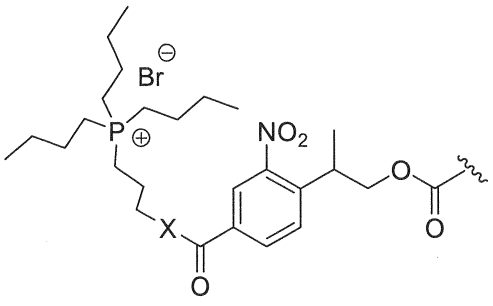

, wherein X is selected from NH or O.

17. The process of claim 12, further comprising phosphitylation of the product of step (b) or (c) to form a compound of formula (IIa):

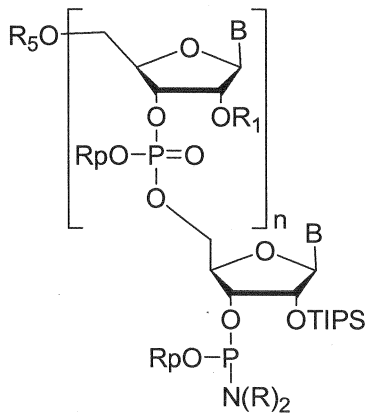

(IIa)

~~wherein n, B, R_1, R_5, R_p and R are as previously defined~~.

18. The process of any one of claims 13 to 16, further comprising phosphitylation of the product of step (d) to form a compound of formula (IIa):

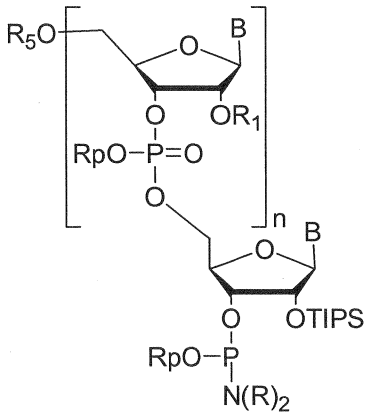

(IIa)

~~wherein n, B, R_1, R_5, R_p and R are as previously defined~~.

19. The process of any one of claims 11 to 18, wherein:

R_1 is TBDMS;

R_5 is selected from DMTr or MMTr;

R_p is selected from methyl Me, 2-cyanoethyl CNEt, ortho-chlorophenyl o-ClPh, or para-chlorophenyl p-ClPh;

R is selected from isopropyl, methyl, or ethyl; and

B is a nucleobase protected on at least one nitrogen by a suitable N-protecting group,

preferably the N-protecting group is selected from levulinyl, acetyl, difluoroacetyl, trifluoroacetyl, isobutyryl, benzoyl, 9-fluorenylmethoxycarbonyl, phenoxyacetyl, dimethylformamidine, or N,N-diphenyl carbamate.

20. The process of claim 19, wherein:

R_5 is DMTr;

R_p is methyl; and

R is iPr.

21. A process for preparing a compound of formula (V):

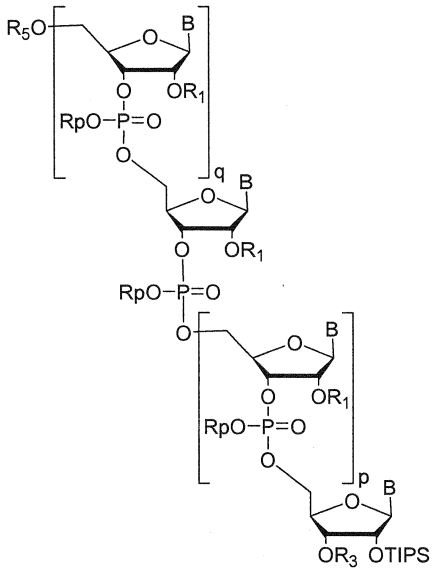

(V)

wherein

p is selected from 0, 1, or 2;

q is selected from 0, 1, or 2;

and p+q is less than or equal to 2;

R_1 is a protecting group;

R_3 is selected from H or a protecting group, wherein the protecting group is a levulinyl group or an ionic tag;

R_5 is a protecting group;

R_p is a protecting group;

B is a nitrogen-containing base;

wherein each B, R_1 and R_p may be the same or different from any other B, R_1 and R_p, respectively;

the process comprising the steps of:

a) condensing a phosphoramidite of formula (VI):

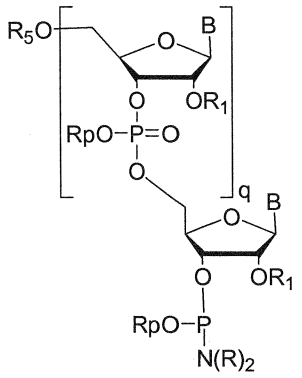

(VI)

wherein q, B, R_1, R_5 and R_p are as defined above, and

R is ~~lower~~ alkyl, or the $N(R)_2$ moiety is a cyclic alkylamine, or a substituted cyclic alkylamine, preferably morpholine;

with a compound of formula (VII):

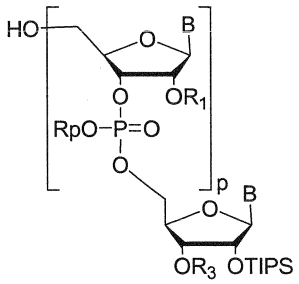

(VII)

wherein p, B, R_1, R_3, and R_p are as defined above; and

b) oxidizing the product of step (a) to produce the compound of formula (V).

22. The process of claim 21, wherein R_3 is H.

23. The process of claim 21, wherein R_3 is a protecting group, the process further comprising

c) removal of the R_3 protecting group.

24. The process of claim 23, wherein the protecting group is a levulinyl ~~Lev~~ group.

25. The process of claim 23, wherein the protecting group is an ionic tag.

26. The process of claim 25, wherein the ionic tag is selected from:

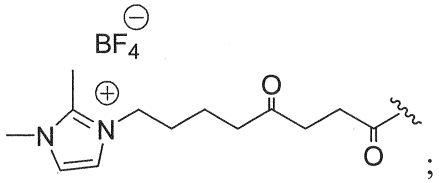

;

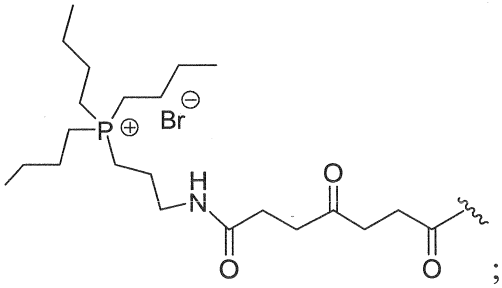

; or

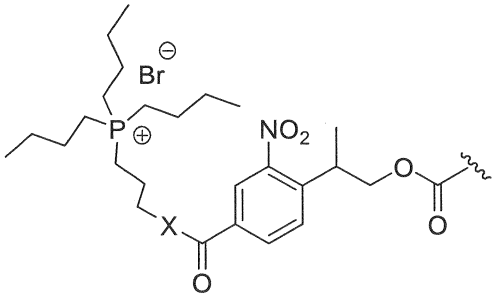

, wherein X is selected from NH or O.

27. The process of claim 22, further comprising phosphitylation of the product of step (b) to form a compound of formula (Va):

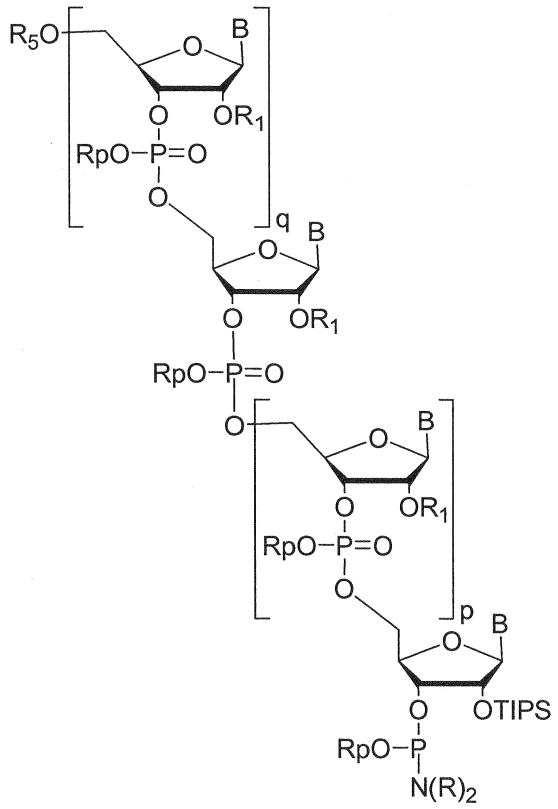

(Va)

~~wherein p, q, B, R_1, R_5, R_p and R are as previously defined~~.

28. The process of any one of claims 23 to 26, further comprising phosphitylation of the product of step (c) to form a compound of formula (Va):

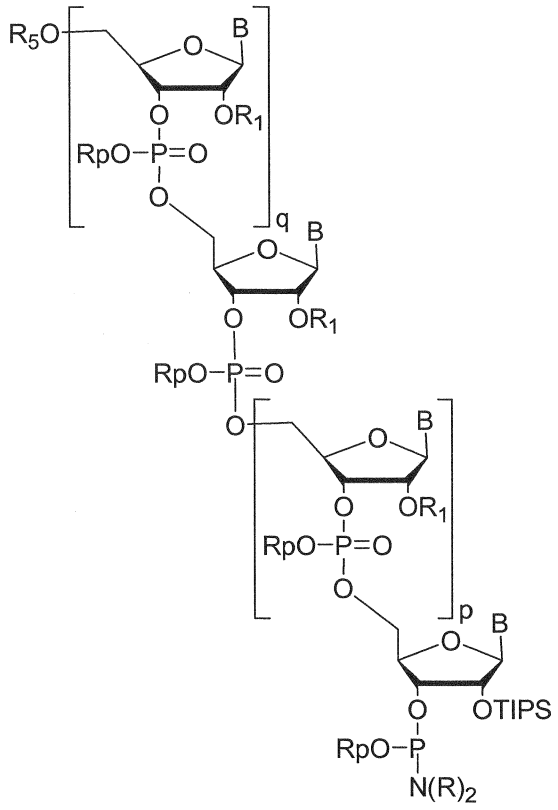

(Va)

~~wherein p, q, B, R_1, R_5, R_p and R are as previously defined~~.

29. The process of any one of claims 21 to 28, wherein:

R_1 is TBDMS;

R_5 is selected from DMTr or MMTr;

R_p is selected from methyl Me, 2-cyanoethyl CNEt, ortho-chlorophenyl o-ClPh, or para-chlorophenyl p-ClPh;

R is selected from isopropyl, methyl, or ethyl; and

B is a nucleobase protected on at least one nitrogen by a suitable N-protecting group,

preferably the N-protecting group is selected from levulinyl, acetyl, difluoroacetyl, trifluoroacetyl, isobutyryl, benzoyl, 9-fluorenylmethoxycarbonyl,

phenoxyacetyl, dimethylformamidine, or N,N-diphenyl carbamate.

30. The process of claim 29, wherein:

R_5 is DMTr;

R_p is methyl; and

R is iPr.

31. A process for preparing an N-mer oligonucleotide, said process comprising:

a) condensing a phosphoramidite of formula (IIa):

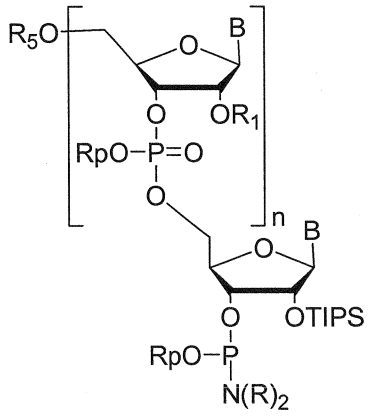

(IIa)

wherein

n is an integer from 0 to 19;

R_1 is a protecting group;

R_5 is a protecting group;

R_p is a protecting group;

R is ~~lower~~ alkyl, or the $N(R)_2$ moiety is a cyclic alkylamine, or a substituted cyclic alkylamine, preferably morpholine;

B is a nitrogen-containing base;

wherein each B, R_1 and R_p may be the same or different from any other B, R_1 and R_p, respectively;

with

(a') a ~~functionalized~~ linker L bound to a support (S),

wherein (S) is selected from a solid support or an ionic support, or

(b') a compound of formula 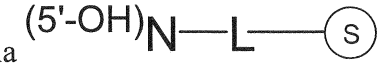

wherein $^{(5'\text{-OH})}N$ is a nucleoside/oligonucleotide chain bound to the solid support or the ionic support via the ~~functionalized~~ linker L and having a free 5'-OH group;

b) oxidizing the product of step (a) to form a compound of formula (VIII):

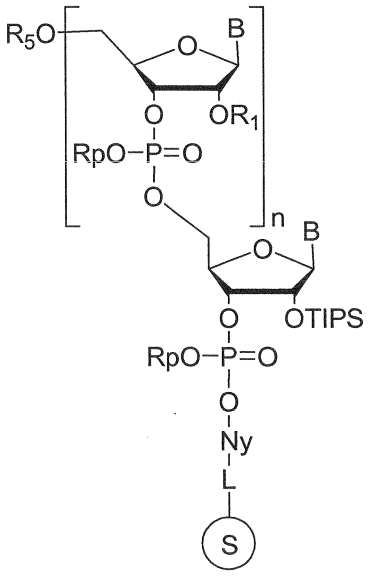

(VIII)

wherein

y is 0 or 1;

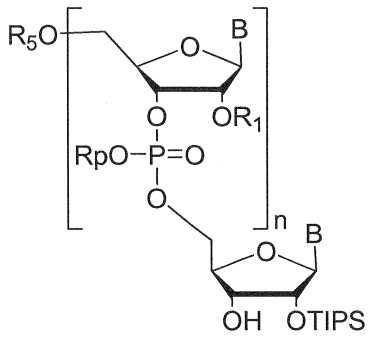

(IIb)

wherein

n is an integer from 0 to 19;

R_1 is a protecting group;

R_5 is a protecting group;

R_p is a protecting group;

B is a nitrogen-containing base;

wherein each B, R_1 and R_p may be the same or different from any other B, R_1 and R_p, respectively;

with

a ~~functionalized~~ linker L bound to an ionic support (S),

b) oxidizing the product of step (a) to form a compound of formula (IX):

wherein n, B, R_1, R_5, and R_p are as defined above, and R is ~~lower~~ alkyl, or the $N(R)_2$ moiety is a cyclic alkylamine, or a substituted cyclic alkylamine, preferably morpholine; wherein each n, B, R_1, R_5, and R_p may be the same or different from any other n, B, R_1, R_5, and R_p, respectively;

(iii) oxidizing the product of step (ii); and

(iv) optionally repeating steps (i)-(iii);

to form a bound N-mer oligonucleotide.

42. The process of claim 41, wherein n is selected from 0, 1, 2, or 3.

43. The process of claim 41 or 42, wherein 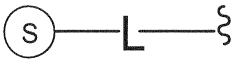 is selected from:

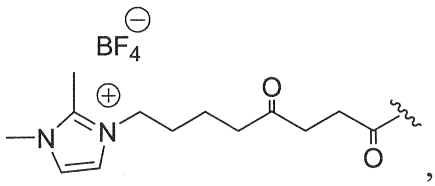

,

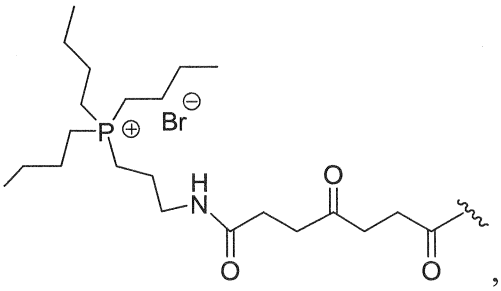

, or

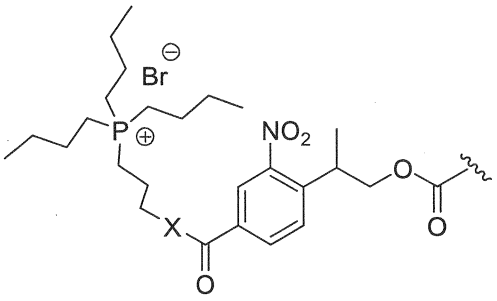

, wherein X is selected from NH or O.

44. The process of any one of claims 41 to 43, wherein:

R_1 is TBDMS;

R_5 is selected from DMTr or MMTr;