FIG. 1

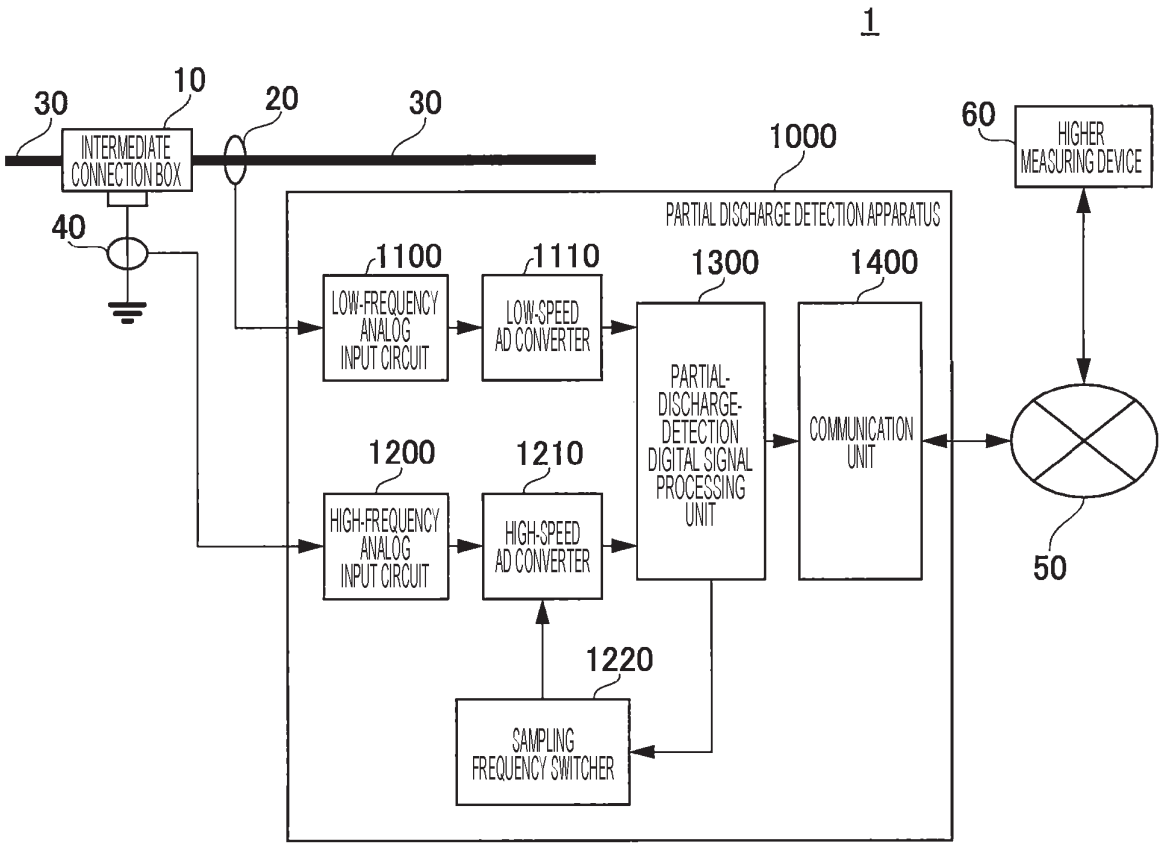
1
30
10
20
30
INTERMEDIATE CONNECTION BOX
40
1000
PARTIAL DISCHARGE DETECTION APPARATUS
60
HIGHER MEASURING DEVICE
1100
LOW-FREQUENCY ANALOG INPUT CIRCUIT
1110
LOW-SPEED AD CONVERTER
1300
PARTIAL-DISCHARGE-DETECTION DIGITAL SIGNAL PROCESSING UNIT
1400
COMMUNICATION UNIT
1200
HIGH-FREQUENCY ANALOG INPUT CIRCUIT
1210
HIGH-SPEED AD CONVERTER
1220
SAMPLING FREQUENCY SWITCHER
50

FIG. 2

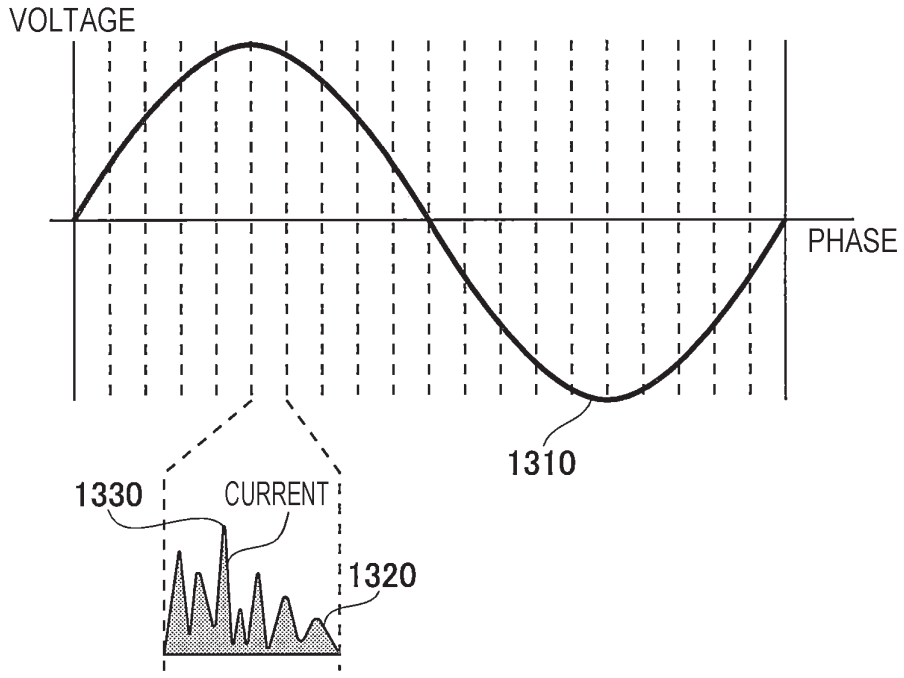

FIG. 3

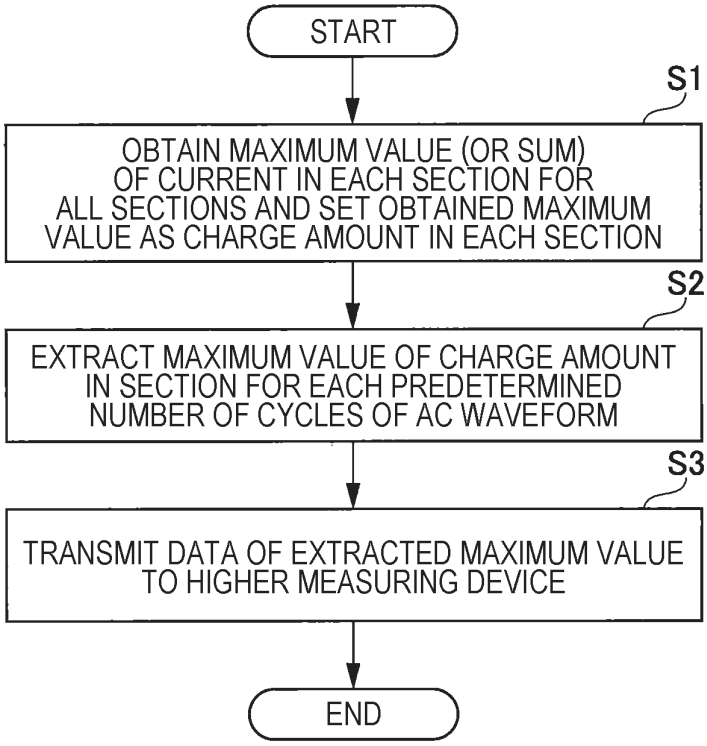
START
S1
OBTAIN MAXIMUM VALUE (OR SUM) OF CURRENT IN EACH SECTION FOR ALL SECTIONS AND SET OBTAINED MAXIMUM VALUE AS CHARGE AMOUNT IN EACH SECTION
S2
EXTRACT MAXIMUM VALUE OF CHARGE AMOUNT IN SECTION FOR EACH PREDETERMINED NUMBER OF CYCLES OF AC WAVEFORM
S3
TRANSMIT DATA OF EXTRACTED MAXIMUM VALUE TO HIGHER MEASURING DEVICE
END

FIG. 4

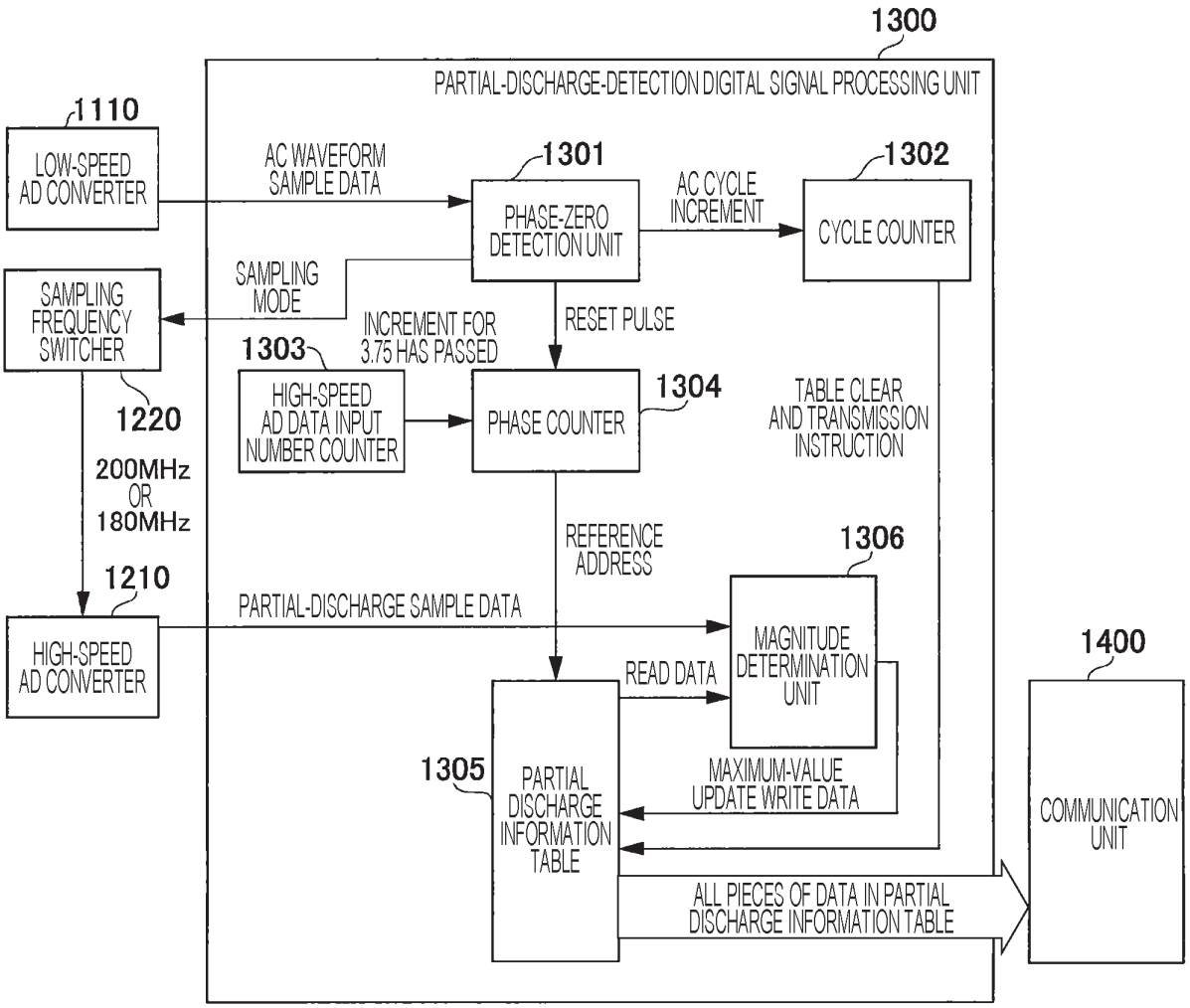
1300
PARTIAL-DISCHARGE-DETECTION DIGITAL SIGNAL PROCESSING UNIT
1110
LOW-SPEED AD CONVERTER
AC WAVEFORM SAMPLE DATA
1301
PHASE-ZERO DETECTION UNIT
AC CYCLE INCREMENT
1302
CYCLE COUNTER
SAMPLING MODE
SAMPLING FREQUENCY SWITCHER
INCREMENT FOR 3.75 HAS PASSED
RESET PULSE
1303
HIGH-SPEED AD DATA INPUT NUMBER COUNTER
1304
PHASE COUNTER
TABLE CLEAR AND TRANSMISSION INSTRUCTION
1220
200MHz OR 180MHz
REFERENCE ADDRESS
1306
1210
PARTIAL-DISCHARGE SAMPLE DATA
HIGH-SPEED AD CONVERTER
MAGNITUDE DETERMINATION UNIT
1400
READ DATA
1305
PARTIAL DISCHARGE INFORMATION TABLE
MAXIMUM-VALUE UPDATE WRITE DATA
COMMUNICATION UNIT
ALL PIECES OF DATA IN PARTIAL DISCHARGE INFORMATION TABLE

FIG. 5

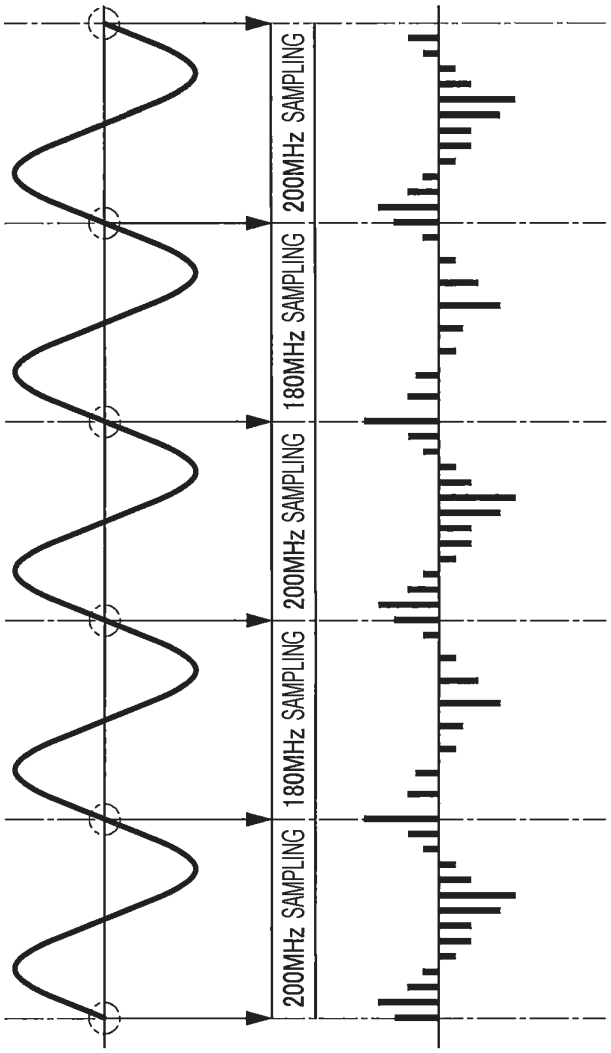
(1) AC WAVEFORM OF COMMERCIAL FREQUENCY
(2) SAMPLING SWITCHING OF HIGH-SPEED AD CONVERTER
(3) PARTIAL-DISCHARGE PULSE SAMPLING DATA FROM HIGH-SPEED AD CONVERTER
200MHz SAMPLING
180MHz SAMPLING
200MHz SAMPLING
180MHz SAMPLING
200MHz SAMPLING

FIG. 6

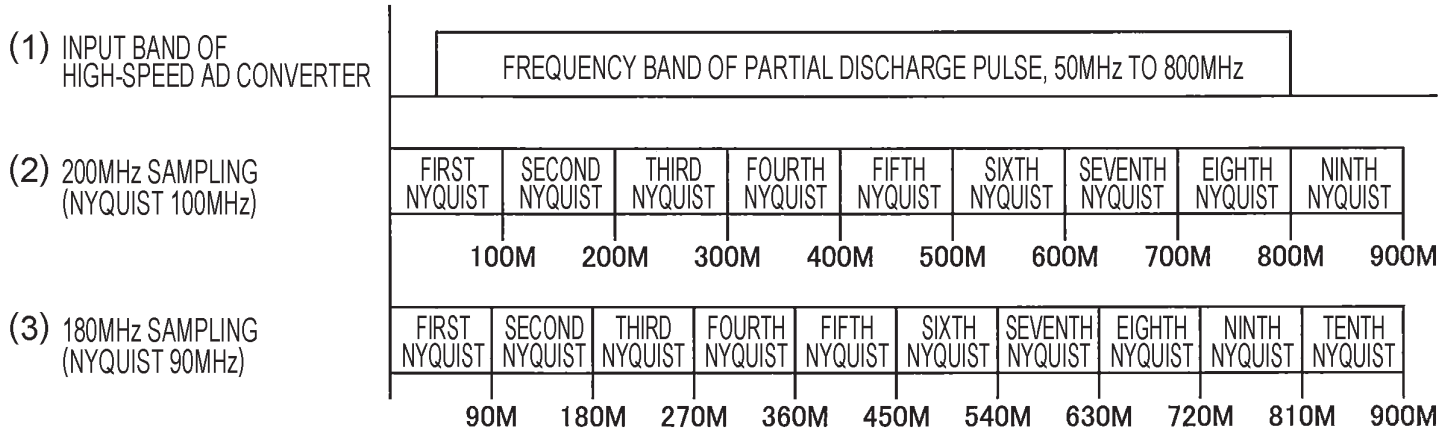
(1) INPUT BAND OF HIGH-SPEED AD CONVERTER
FREQUENCY BAND OF PARTIAL DISCHARGE PULSE, 50MHz TO 800MHz
(2) 200MHz SAMPLING (NYQUIST 100MHz)
FIRST NYQUIST
SECOND NYQUIST
THIRD NYQUIST
FOURTH NYQUIST
FIFTH NYQUIST
SIXTH NYQUIST
SEVENTH NYQUIST
EIGHTH NYQUIST
NINTH NYQUIST
100M 200M 300M 400M 500M 600M 700M 800M 900M
(3) 180MHz SAMPLING (NYQUIST 90MHz)
FIRST NYQUIST
SECOND NYQUIST
THIRD NYQUIST
FOURTH NYQUIST
FIFTH NYQUIST
SIXTH NYQUIST
SEVENTH NYQUIST
EIGHTH NYQUIST
NINTH NYQUIST
TENTH NYQUIST
90M 180M 270M 360M 450M 540M 630M 720M 810M 900M

FIG. 7

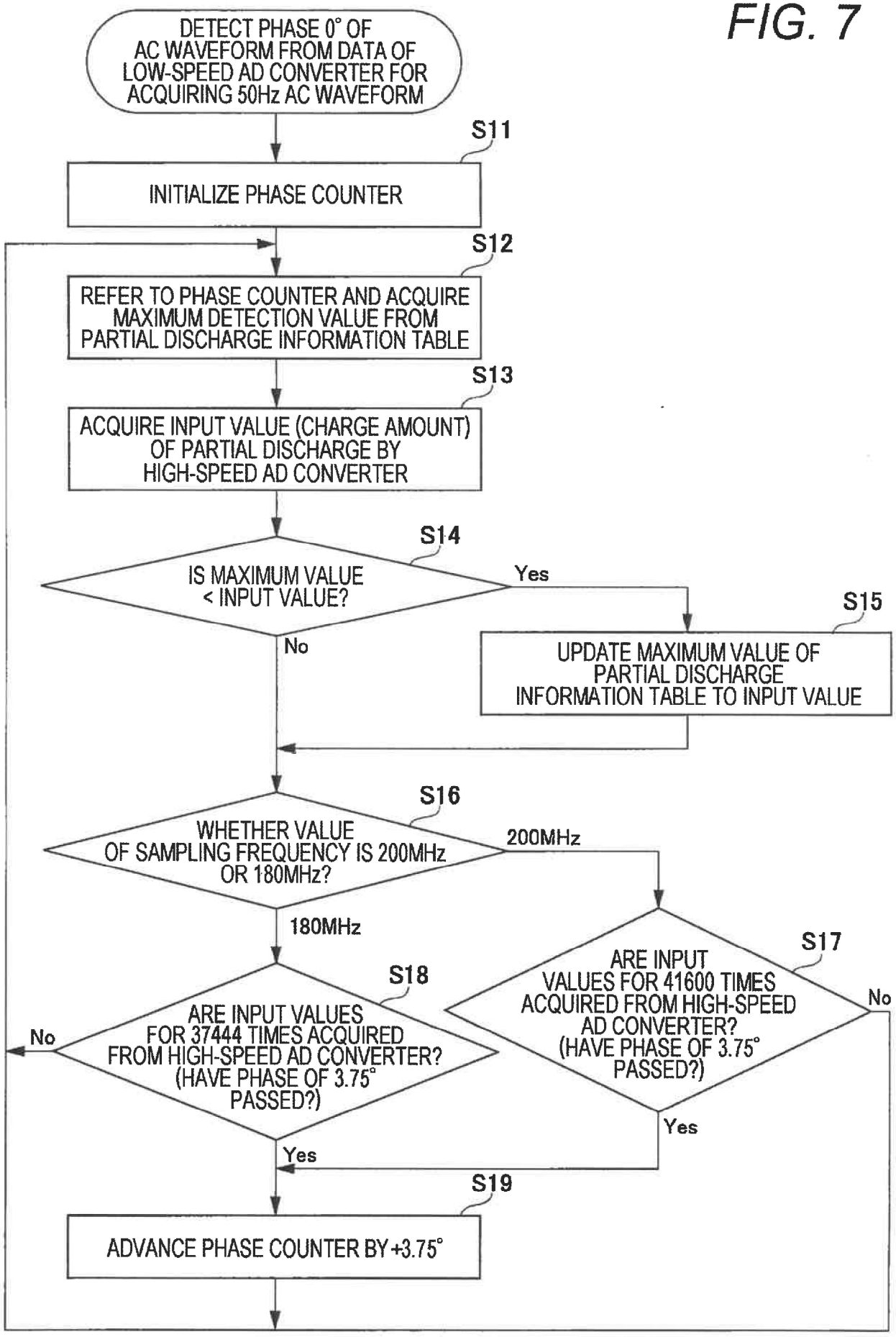
DETECT PHASE 0° OF AC WAVEFORM FROM DATA OF LOW-SPEED AD CONVERTER FOR ACQUIRING 50Hz AC WAVEFORM
S11
INITIALIZE PHASE COUNTER
S12
REFER TO PHASE COUNTER AND ACQUIRE MAXIMUM DETECTION VALUE FROM PARTIAL DISCHARGE INFORMATION TABLE
S13
ACQUIRE INPUT VALUE (CHARGE AMOUNT) OF PARTIAL DISCHARGE BY HIGH-SPEED AD CONVERTER
S14
IS MAXIMUM VALUE < INPUT VALUE?
Yes
No
S15
UPDATE MAXIMUM VALUE OF PARTIAL DISCHARGE INFORMATION TABLE TO INPUT VALUE
S16
WHETHER VALUE OF SAMPLING FREQUENCY IS 200MHz OR 180MHz?
200MHz
180MHz
S17
ARE INPUT VALUES FOR 41600 TIMES ACQUIRED FROM HIGH-SPEED AD CONVERTER? (HAVE PHASE OF 3.75° PASSED?)
No
Yes
S18
ARE INPUT VALUES FOR 37444 TIMES ACQUIRED FROM HIGH-SPEED AD CONVERTER? (HAVE PHASE OF 3.75° PASSED?)
No
Yes
S19
ADVANCE PHASE COUNTER BY +3.75°

FIG. 8

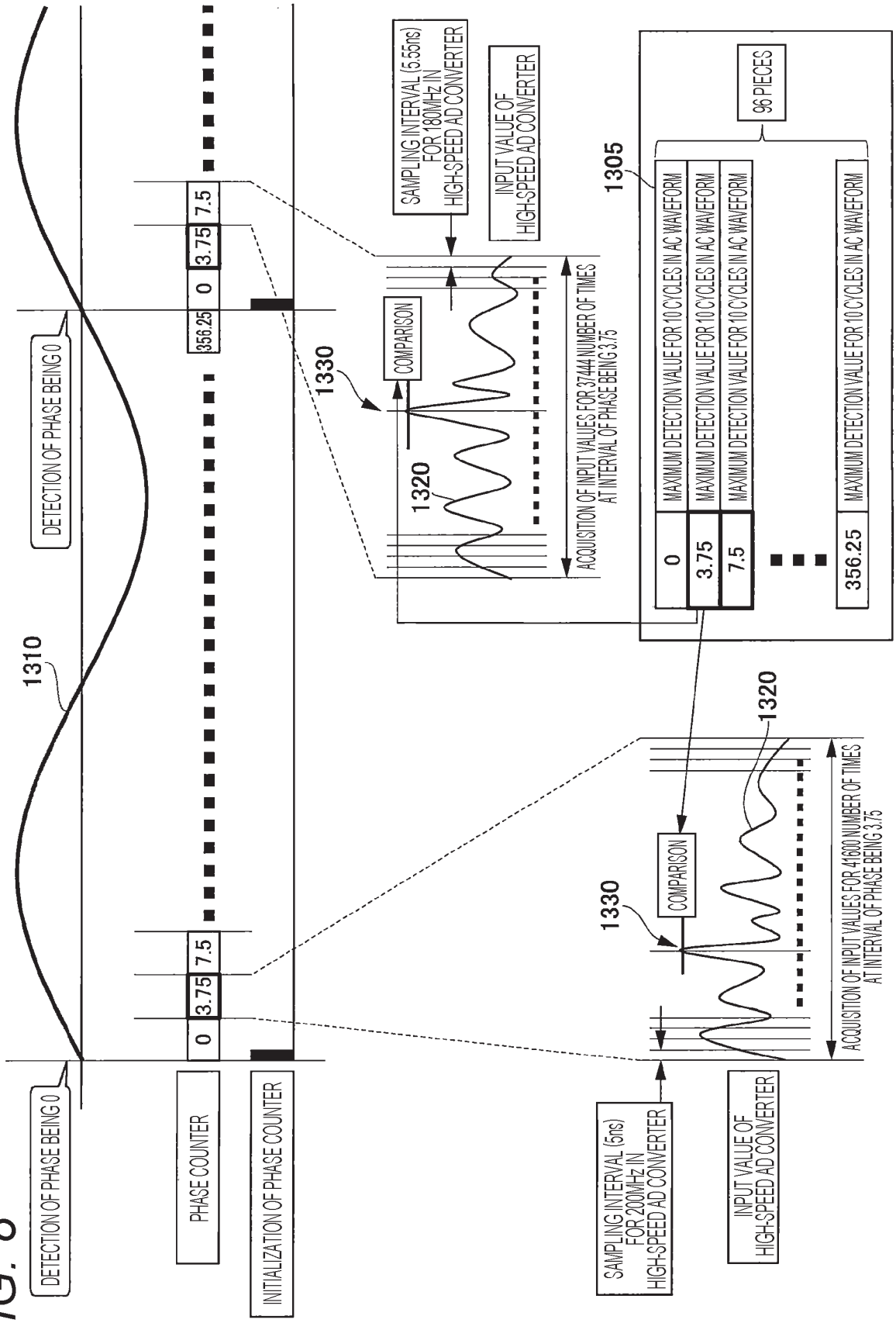
DETECTION OF PHASE BEING 0
PHASE COUNTER
INITIALIZATION OF PHASE COUNTER
0
3.75
7.5
356.25
1310
1330
1320
COMPARISON
SAMPLING INTERVAL (5.55ns) FOR 180Mhz IN HIGH-SPEED AD CONVERTER
INPUT VALUE OF HIGH-SPEED AD CONVERTER
ACQUISITION OF INPUT VALUES FOR 37444 NUMBER OF TIMES AT INTERVAL OF PHASE BEING 3.75
1305
96 PIECES
MAXIMUM DETECTION VALUE FOR 10 CYCLES IN AC WAVEFORM
SAMPLING INTERVAL (5ns) FOR 200Mhz IN HIGH-SPEED AD CONVERTER
INPUT VALUE OF HIGH-SPEED AD CONVERTER
ACQUISITION OF INPUT VALUES FOR 41600 NUMBER OF TIMES AT INTERVAL OF PHASE BEING 3.75

FIG. 9

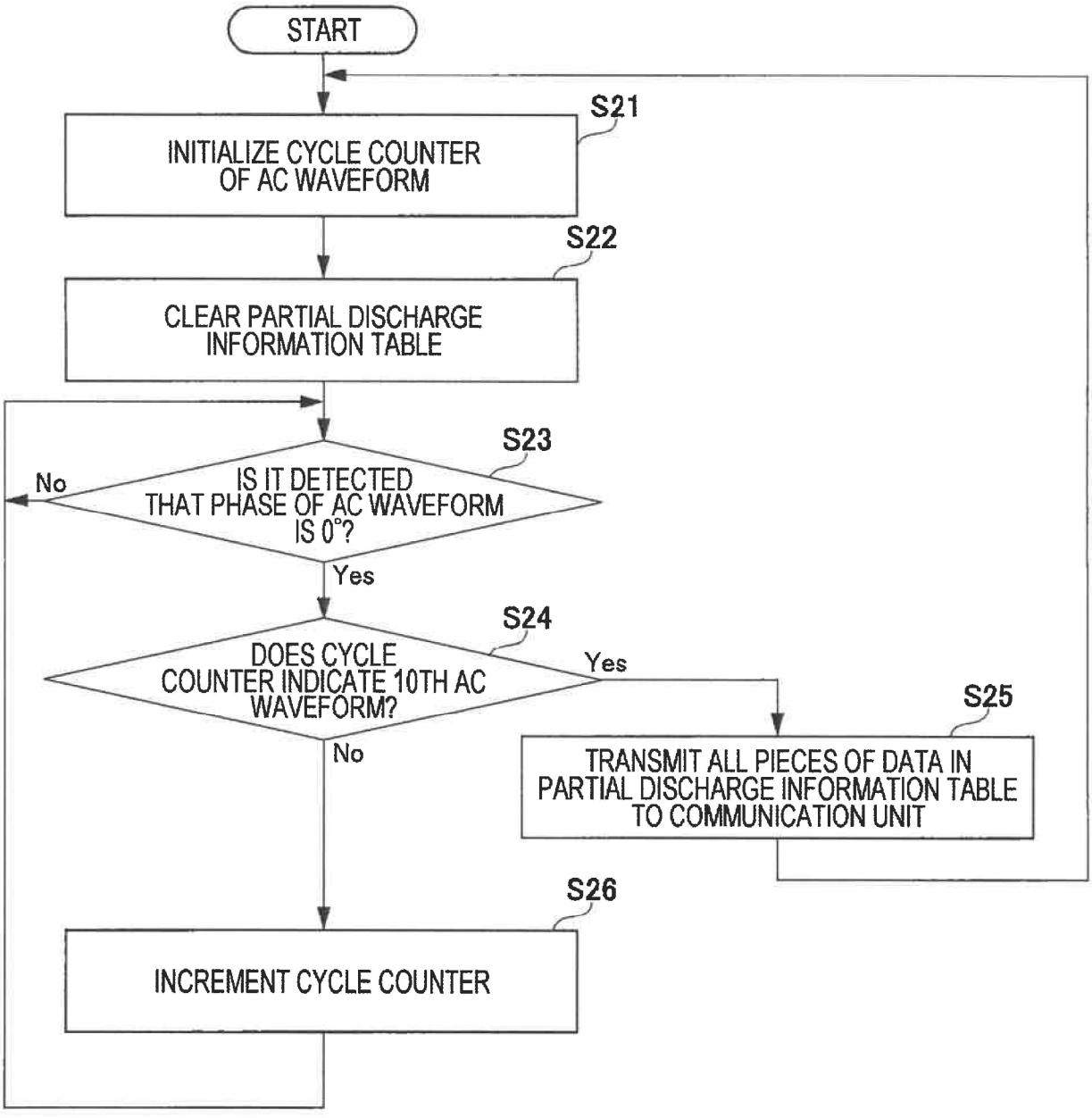
START
S21
INITIALIZE CYCLE COUNTER OF AC WAVEFORM
S22
CLEAR PARTIAL DISCHARGE INFORMATION TABLE
S23
IS IT DETECTED THAT PHASE OF AC WAVEFORM IS 0°?
No
Yes
S24
DOES CYCLE COUNTER INDICATE 10TH AC WAVEFORM?
Yes
No
S25
TRANSMIT ALL PIECES OF DATA IN PARTIAL DISCHARGE INFORMATION TABLE TO COMMUNICATION UNIT
S26
INCREMENT CYCLE COUNTER

FIG. 10

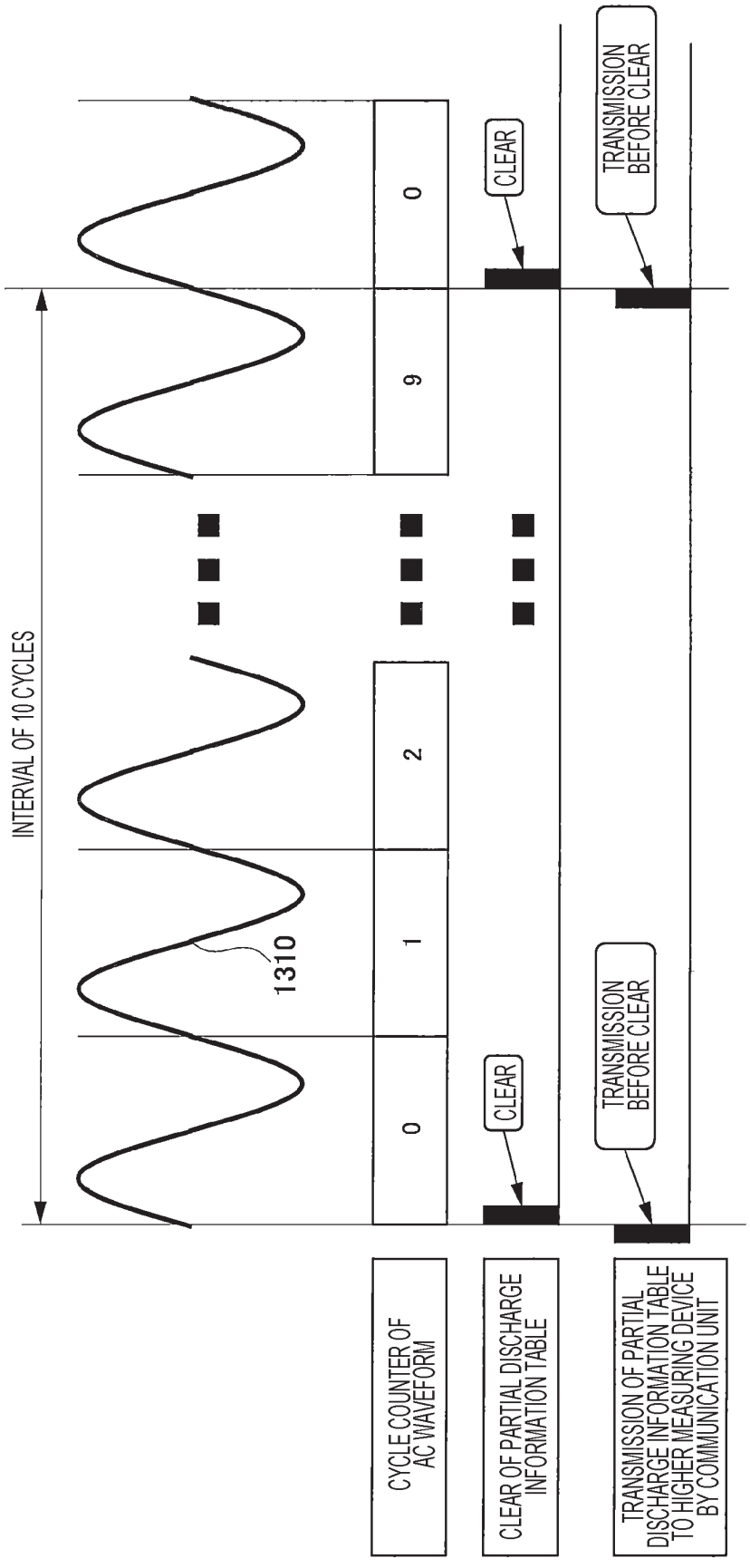
INTERVAL OF 10 CYCLES
1310
0
1
2
9
0
CLEAR
TRANSMISSION BEFORE CLEAR
CLEAR
TRANSMISSION BEFORE CLEAR
CYCLE COUNTER OF AC WAVEFORM
CLEAR OF PARTIAL DISCHARGE INFORMATION TABLE
TRANSMISSION OF PARTIAL DISCHARGE INFORMATION TABLE TO HIGHER MEASURING DEVICE BY COMMUNICATION UNIT

FIG. 11

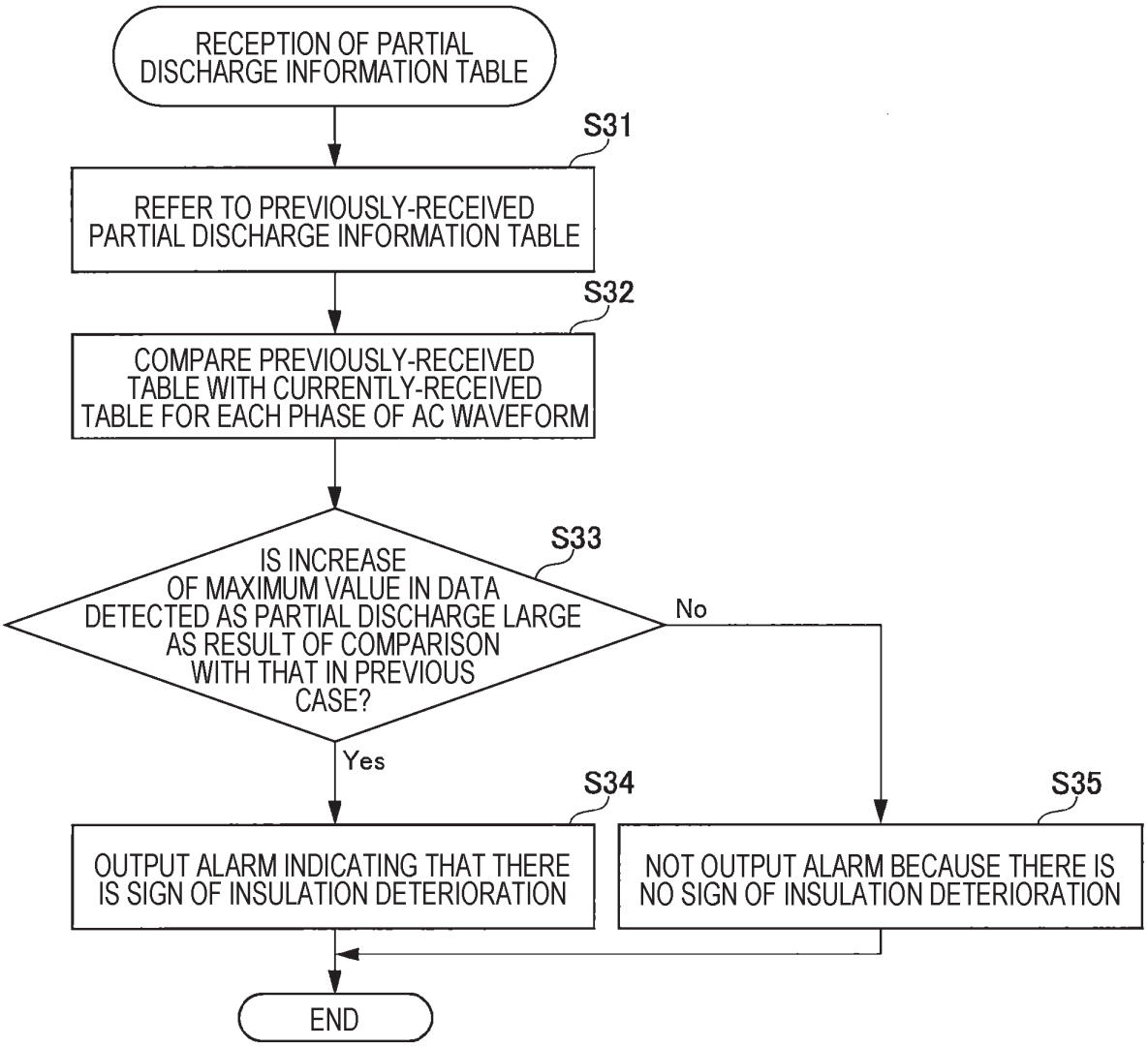
RECEPTION OF PARTIAL DISCHARGE INFORMATION TABLE
S31
REFER TO PREVIOUSLY-RECEIVED PARTIAL DISCHARGE INFORMATION TABLE
S32
COMPARE PREVIOUSLY-RECEIVED TABLE WITH CURRENTLY-RECEIVED TABLE FOR EACH PHASE OF AC WAVEFORM
S33
IS INCREASE OF MAXIMUM VALUE IN DATA DETECTED AS PARTIAL DISCHARGE LARGE AS RESULT OF COMPARISON WITH THAT IN PREVIOUS CASE?
No
Yes
S34
OUTPUT ALARM INDICATING THAT THERE IS SIGN OF INSULATION DETERIORATION
S35
NOT OUTPUT ALARM BECAUSE THERE IS NO SIGN OF INSULATION DETERIORATION
END

FIG. 12

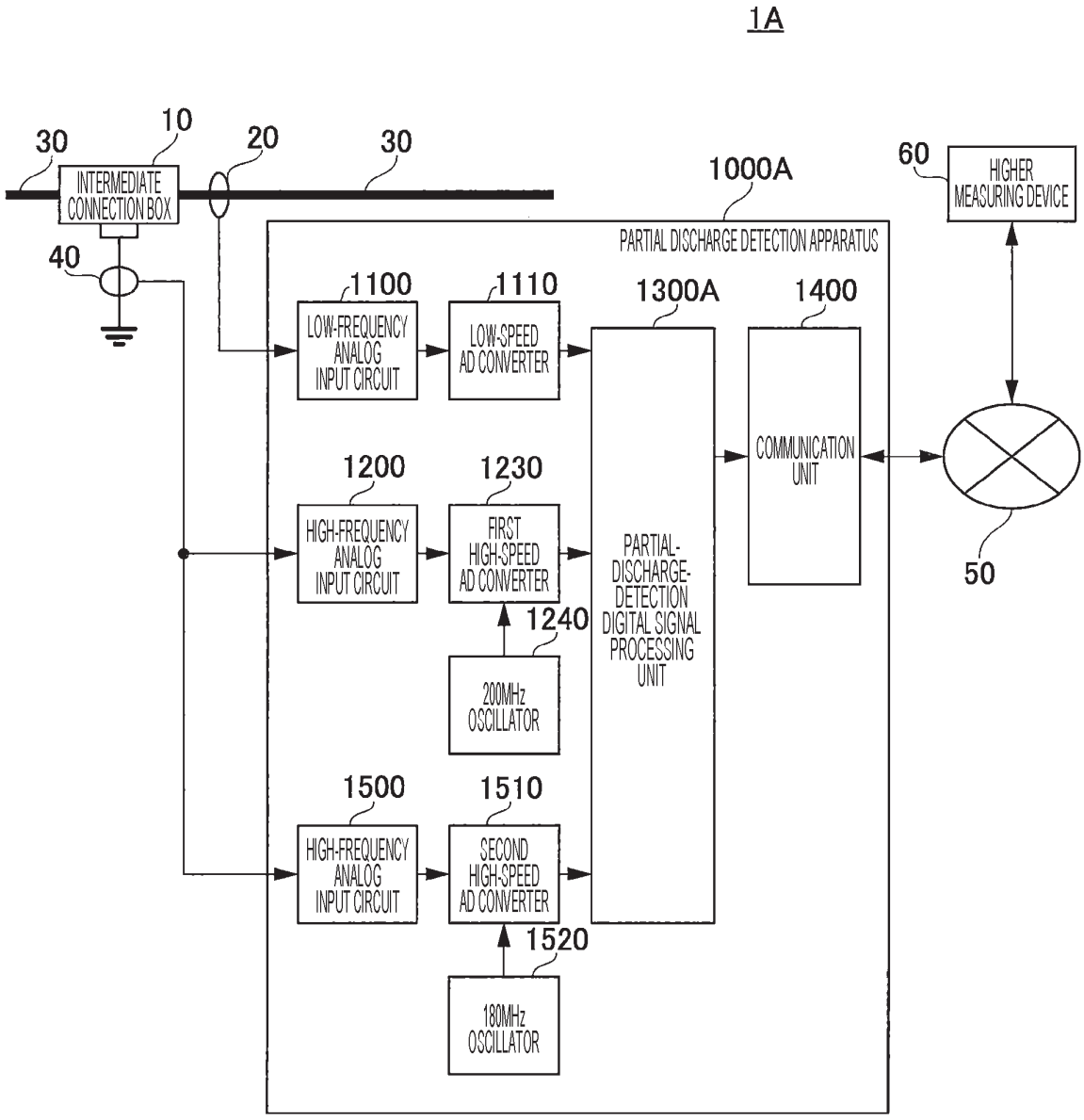
1A
30
10
20
30
1000A
60
HIGHER MEASURING DEVICE
INTERMEDIATE CONNECTION BOX
40
PARTIAL DISCHARGE DETECTION APPARATUS
1100
1110
1300A
1400
LOW-FREQUENCY ANALOG INPUT CIRCUIT
LOW-SPEED AD CONVERTER
COMMUNICATION UNIT
1200
1230
HIGH-FREQUENCY ANALOG INPUT CIRCUIT
FIRST HIGH-SPEED AD CONVERTER
PARTIAL-DISCHARGE-DETECTION DIGITAL SIGNAL PROCESSING UNIT
50
1240
200MHz OSCILLATOR
1500
1510
HIGH-FREQUENCY ANALOG INPUT CIRCUIT
SECOND HIGH-SPEED AD CONVERTER
1520
180MHz OSCILLATOR

FIG. 13

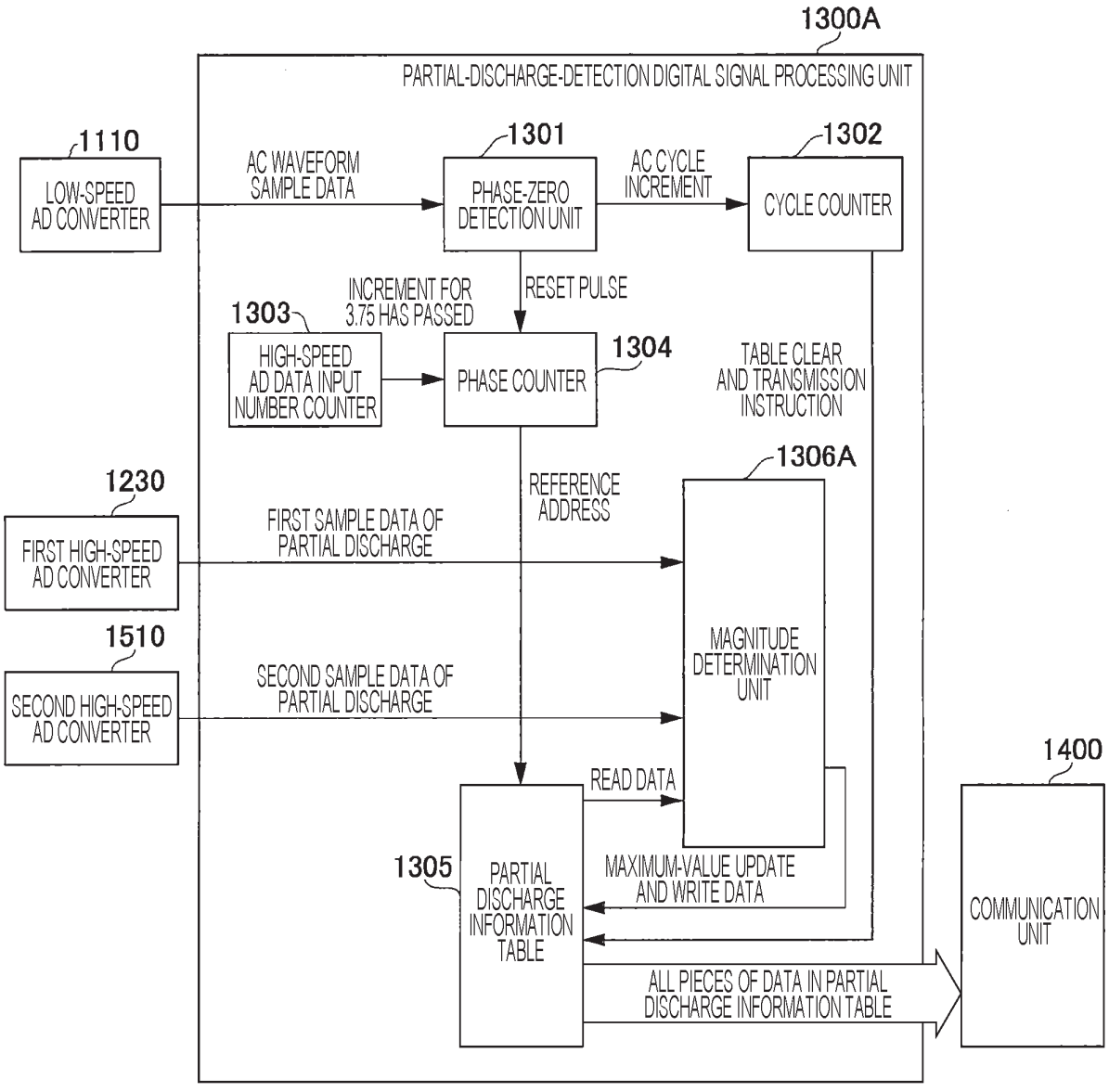
1300A
PARTIAL-DISCHARGE-DETECTION DIGITAL SIGNAL PROCESSING UNIT
1110
LOW-SPEED AD CONVERTER
AC WAVEFORM SAMPLE DATA
1301
PHASE-ZERO DETECTION UNIT
AC CYCLE INCREMENT
1302
CYCLE COUNTER
INCREMENT FOR 3.75 HAS PASSED
RESET PULSE
1303
HIGH-SPEED AD DATA INPUT NUMBER COUNTER
1304
PHASE COUNTER
TABLE CLEAR AND TRANSMISSION INSTRUCTION
1230
FIRST HIGH-SPEED AD CONVERTER
REFERENCE ADDRESS
1306A
FIRST SAMPLE DATA OF PARTIAL DISCHARGE
1510
SECOND HIGH-SPEED AD CONVERTER
SECOND SAMPLE DATA OF PARTIAL DISCHARGE
MAGNITUDE DETERMINATION UNIT
1400
READ DATA
1305
PARTIAL DISCHARGE INFORMATION TABLE
MAXIMUM-VALUE UPDATE AND WRITE DATA
COMMUNICATION UNIT
ALL PIECES OF DATA IN PARTIAL DISCHARGE INFORMATION TABLE

FIG. 14

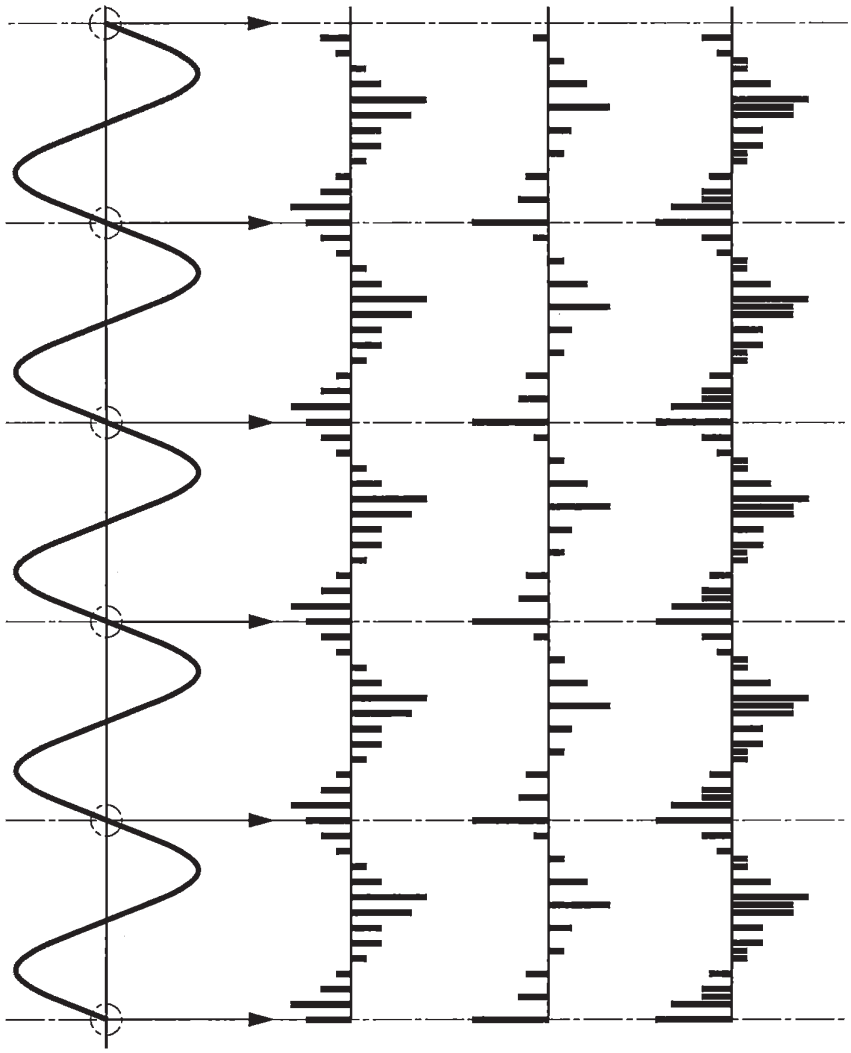
(1) AC WAVEFORM OF COMMERCIAL FREQUENCY
(2) SAMPLING DATA OF PARTIAL DISCHARGE PULSE OBTAINED BY PERFORMING SAMPLING AT 200MHz
(3) SAMPLING DATA OF PARTIAL DISCHARGE PULSE OBTAINED BY PERFORMING SAMPLING AT 180MHz
(4) SAMPLING DATA FOR 200MHz AND SAMPLING DATA FOR 180MHz, WHICH ARE SUPERPOSED

FIG. 15

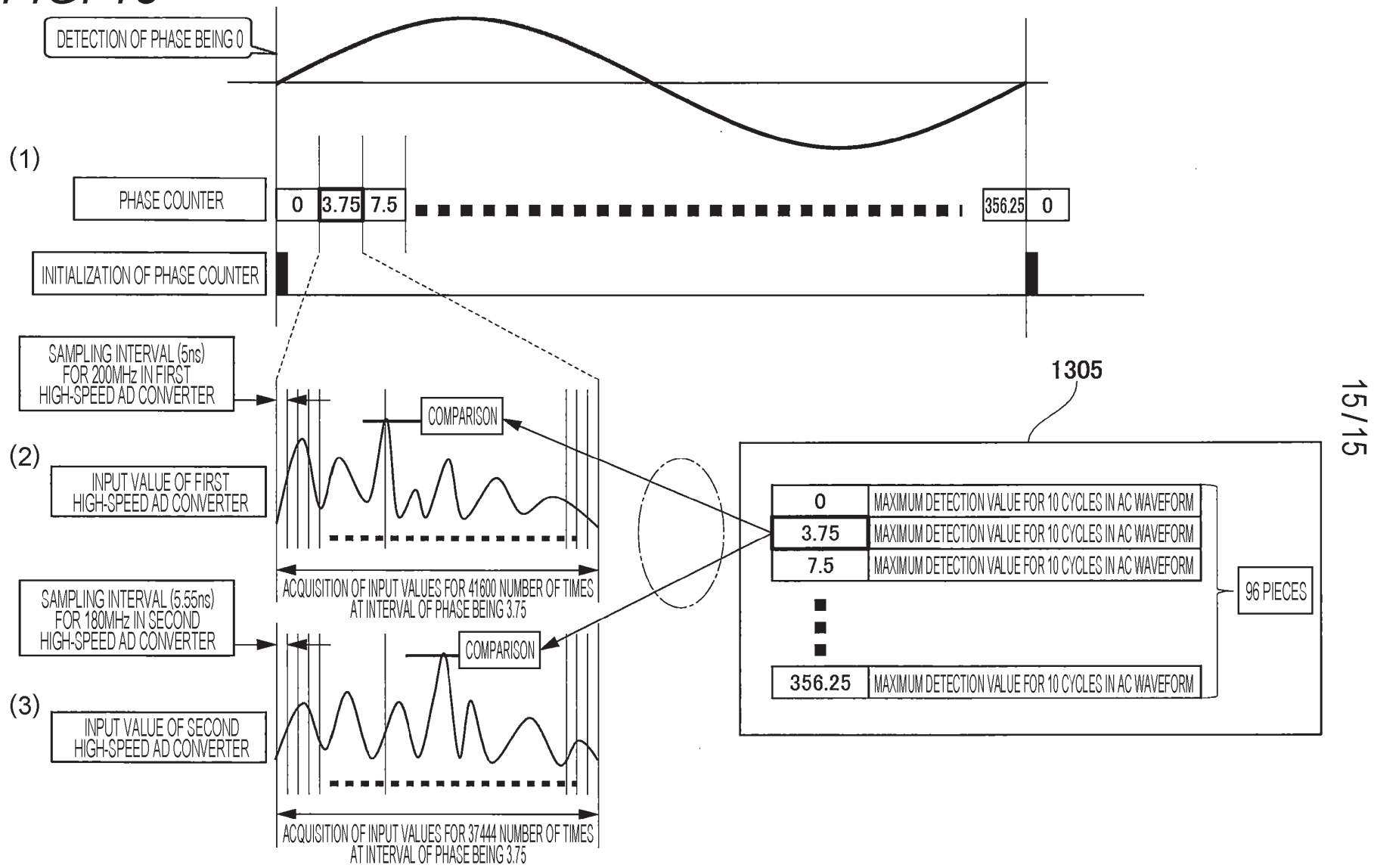
DETECTION OF PHASE BEING 0
(1)
PHASE COUNTER
0
3.75
7.5
356.25
0
INITIALIZATION OF PHASE COUNTER
SAMPLING INTERVAL (5ns) FOR 200MHz IN FIRST HIGH-SPEED AD CONVERTER
COMPARISON
(2)
INPUT VALUE OF FIRST HIGH-SPEED AD CONVERTER
ACQUISITION OF INPUT VALUES FOR 41600 NUMBER OF TIMES AT INTERVAL OF PHASE BEING 3.75
SAMPLING INTERVAL (5.55ns) FOR 180MHz IN SECOND HIGH-SPEED AD CONVERTER
COMPARISON
(3)
INPUT VALUE OF SECOND HIGH-SPEED AD CONVERTER
ACQUISITION OF INPUT VALUES FOR 37444 NUMBER OF TIMES AT INTERVAL OF PHASE BEING 3.75
1305
0
MAXIMUM DETECTION VALUE FOR 10 CYCLES IN AC WAVEFORM
3.75
MAXIMUM DETECTION VALUE FOR 10 CYCLES IN AC WAVEFORM
7.5
MAXIMUM DETECTION VALUE FOR 10 CYCLES IN AC WAVEFORM
356.25
MAXIMUM DETECTION VALUE FOR 10 CYCLES IN AC WAVEFORM
96 PIECES