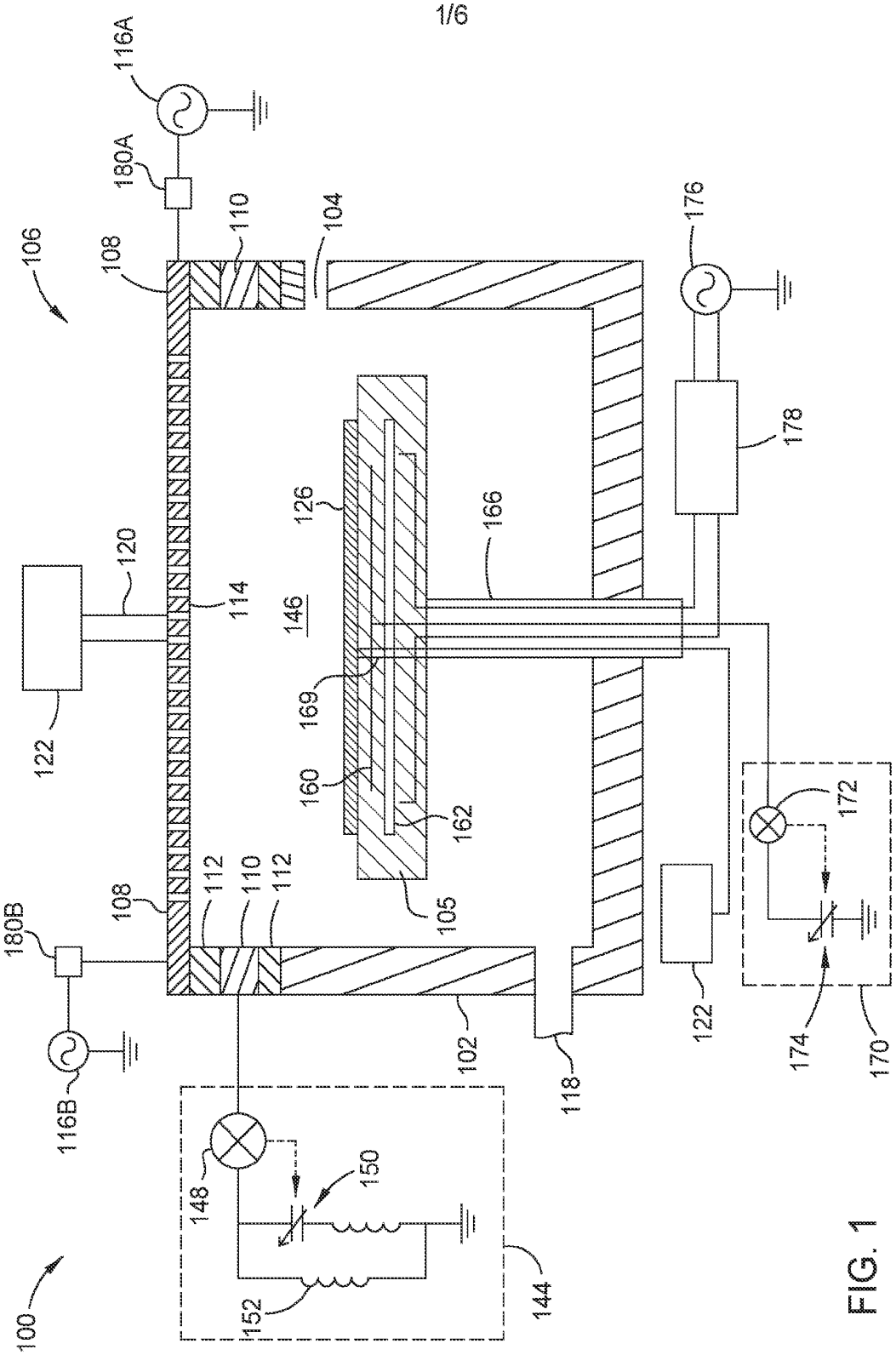
116A
180A
110
104
106
108
176
178
126
166
120
114
146
122
169
160
162
172
105
112
110
112
108
180B
102
118
122
174
170
116B
148
150
152
144
100

FIG. 1

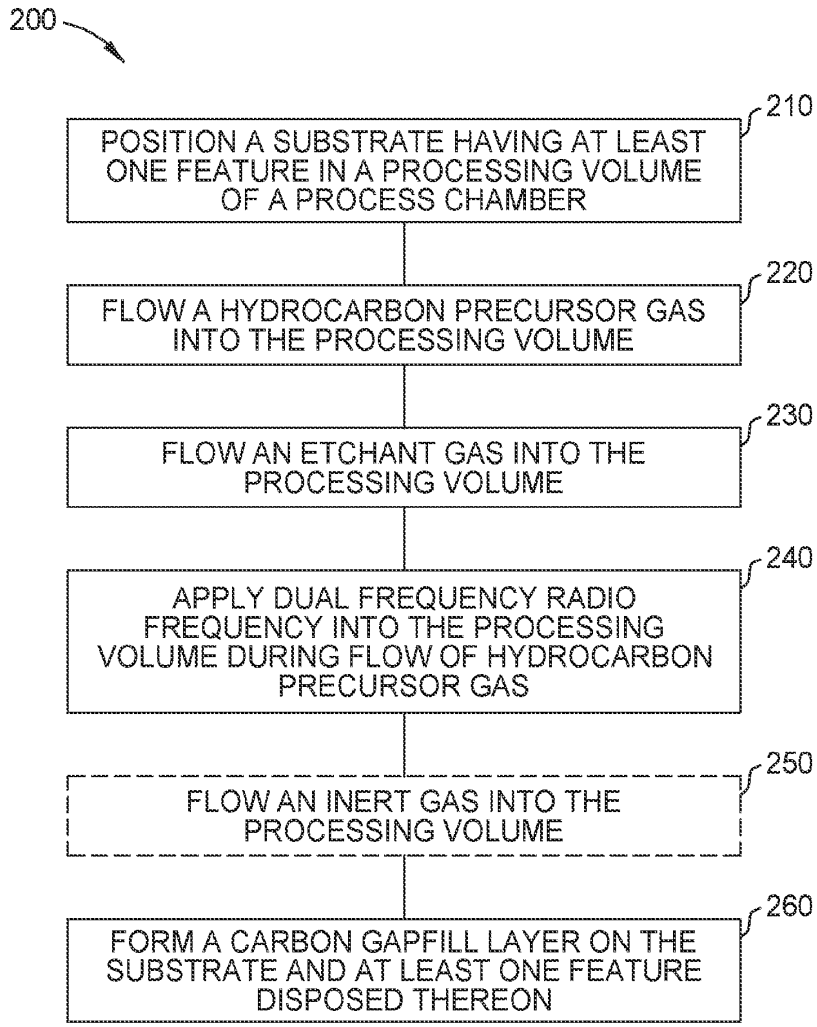
200
210
POSITION A SUBSTRATE HAVING AT LEAST ONE FEATURE IN A PROCESSING VOLUME OF A PROCESS CHAMBER
220
FLOW A HYDROCARBON PRECURSOR GAS INTO THE PROCESSING VOLUME
230
FLOW AN ETCHANT GAS INTO THE PROCESSING VOLUME
240
APPLY DUAL FREQUENCY RADIO FREQUENCY INTO THE PROCESSING VOLUME DURING FLOW OF HYDROCARBON PRECURSOR GAS
250
FLOW AN INERT GAS INTO THE PROCESSING VOLUME
260
FORM A CARBON GAPFILL LAYER ON THE SUBSTRATE AND AT LEAST ONE FEATURE DISPOSED THEREON

FIG. 2

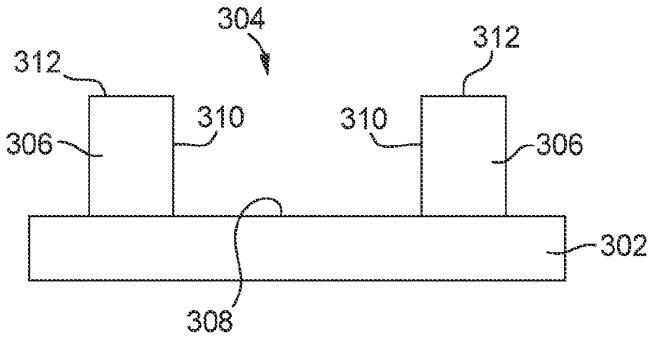


FIG. 3A

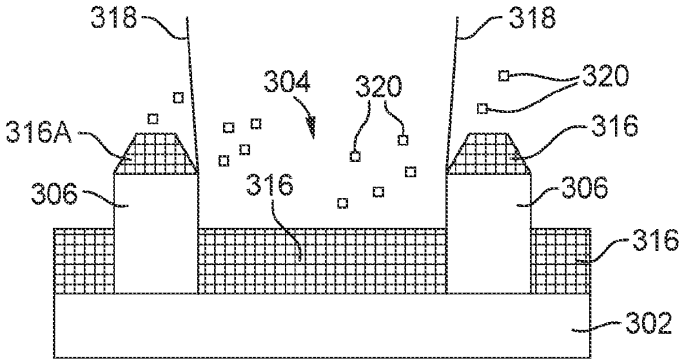


FIG. 3B

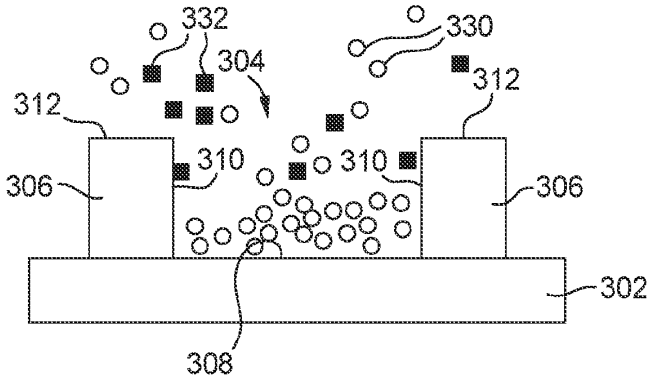


FIG. 3C

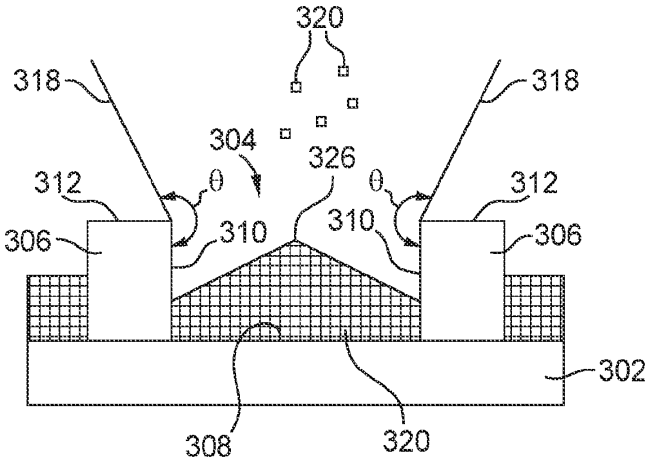
320
318
318
304
326
θ
θ
312
312
310
310
306
306
302
308
320

FIG. 4A

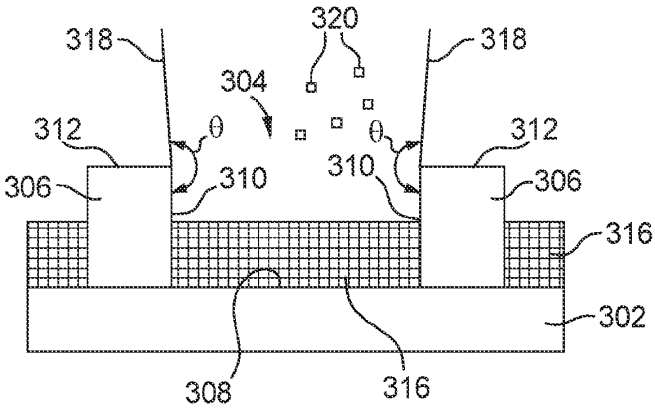
320
318
318
304
θ
θ
312
312
310
310
306
306
316
302
308
316

FIG. 4B

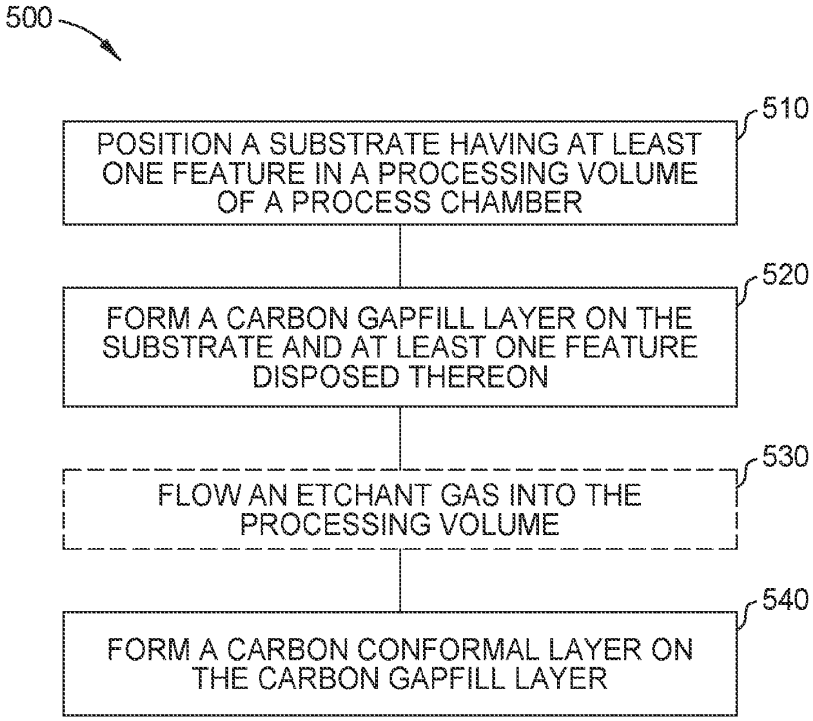
500
510
POSITION A SUBSTRATE HAVING AT LEAST ONE FEATURE IN A PROCESSING VOLUME OF A PROCESS CHAMBER
520
FORM A CARBON GAPFILL LAYER ON THE SUBSTRATE AND AT LEAST ONE FEATURE DISPOSED THEREON
530
FLOW AN ETCHANT GAS INTO THE PROCESSING VOLUME
540
FORM A CARBON CONFORMAL LAYER ON THE CARBON GAPFILL LAYER

FIG. 5

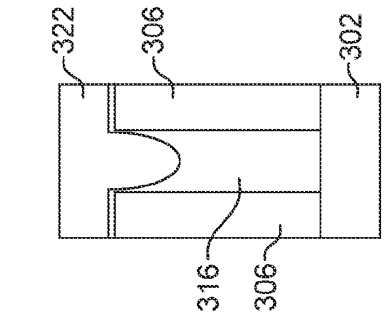


FIG. 6C

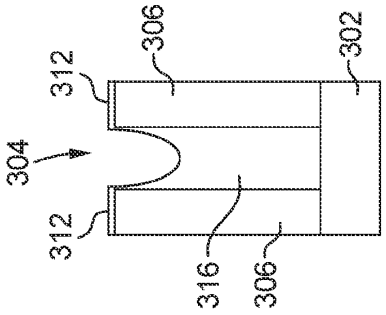


FIG. 6B

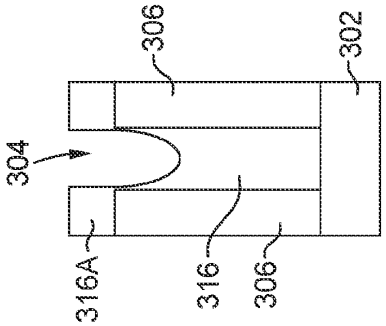


FIG. 6A