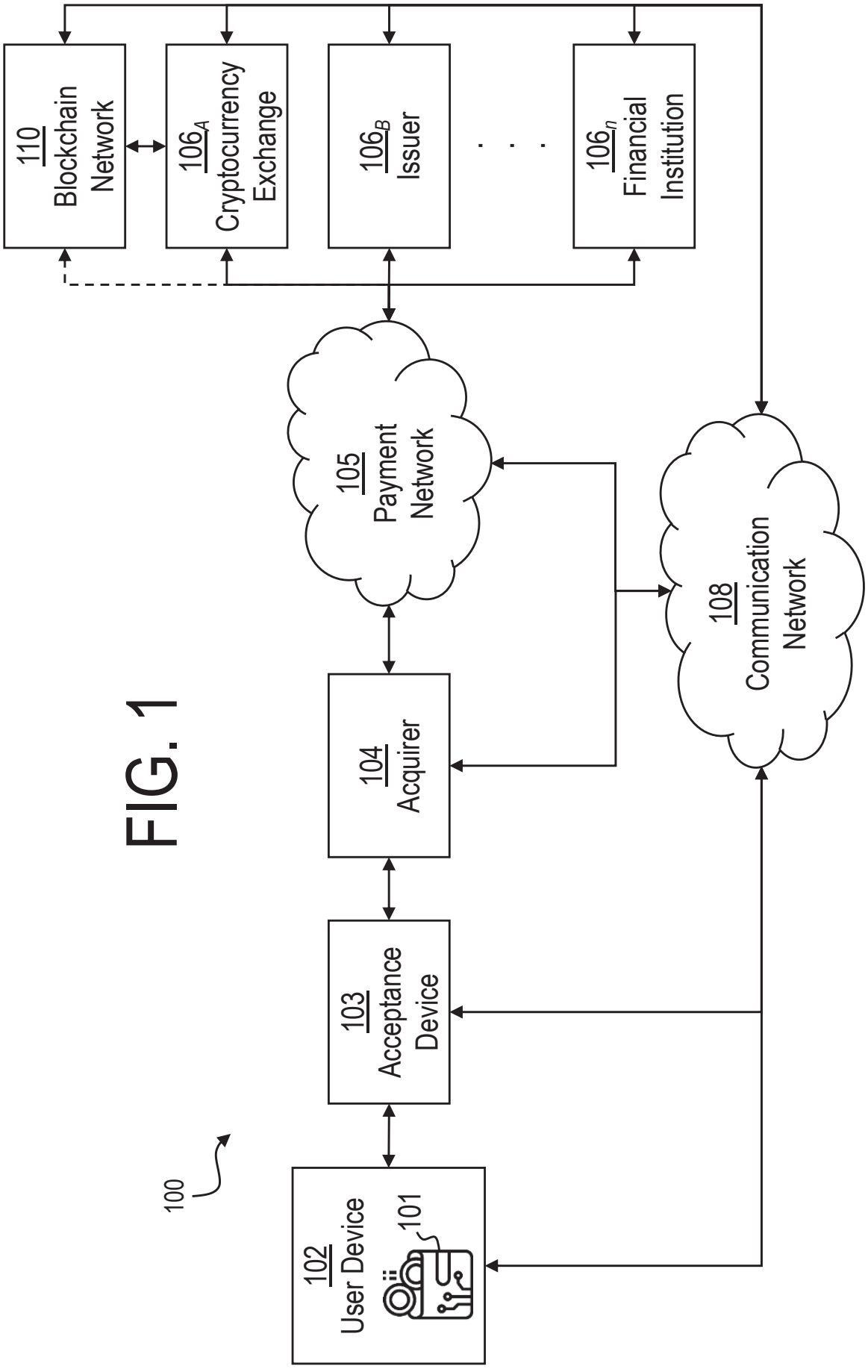
110
Blockchain Network
106A
Cryptocurrency Exchange
106B
Issuer
106n
Financial Institution
105
Payment Network
108
Communication Network
104
Acquirer
103
Acceptance Device
102
User Device
101
100

FIG. 1

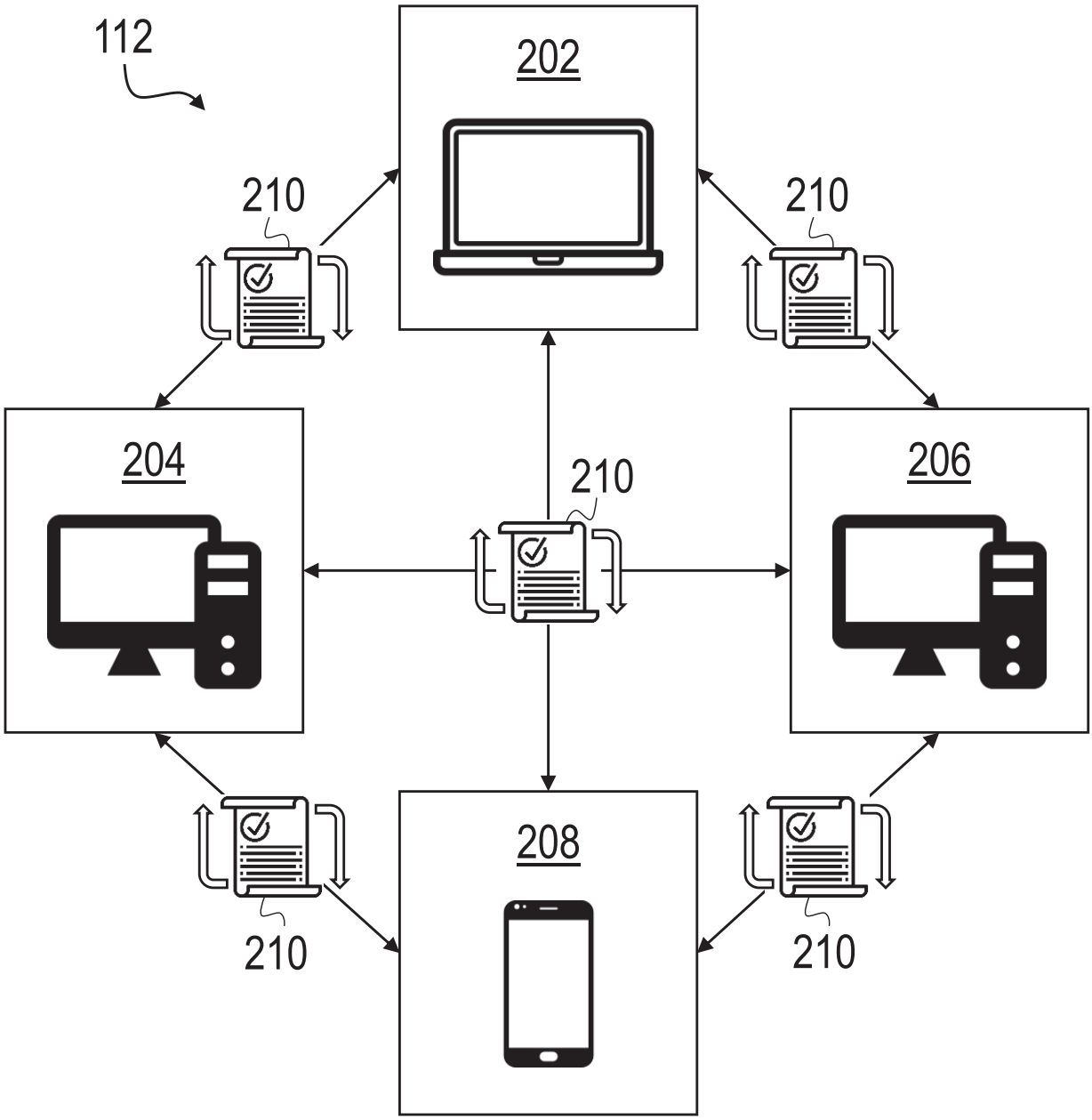

FIG. 2

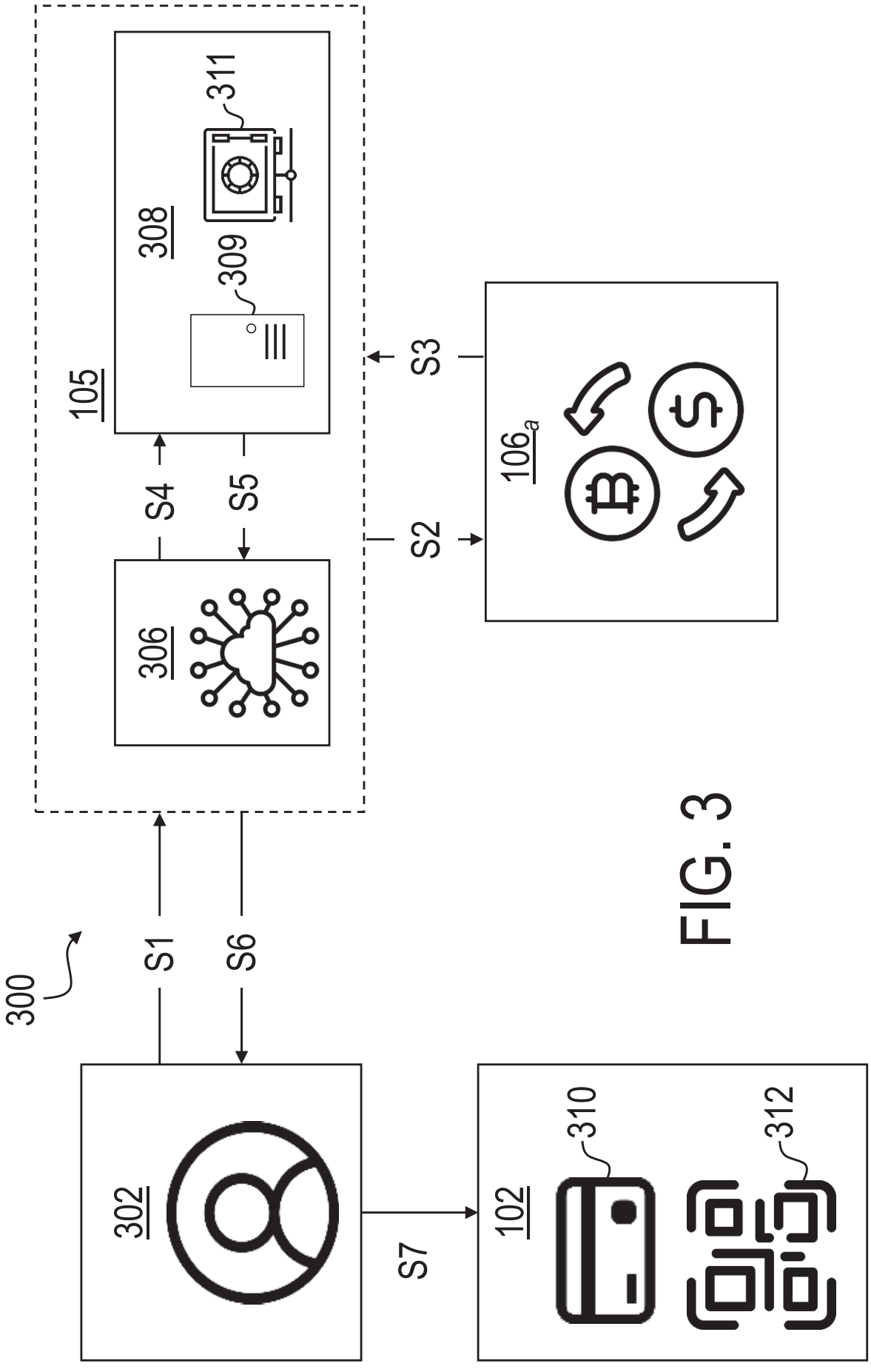

FIG. 3

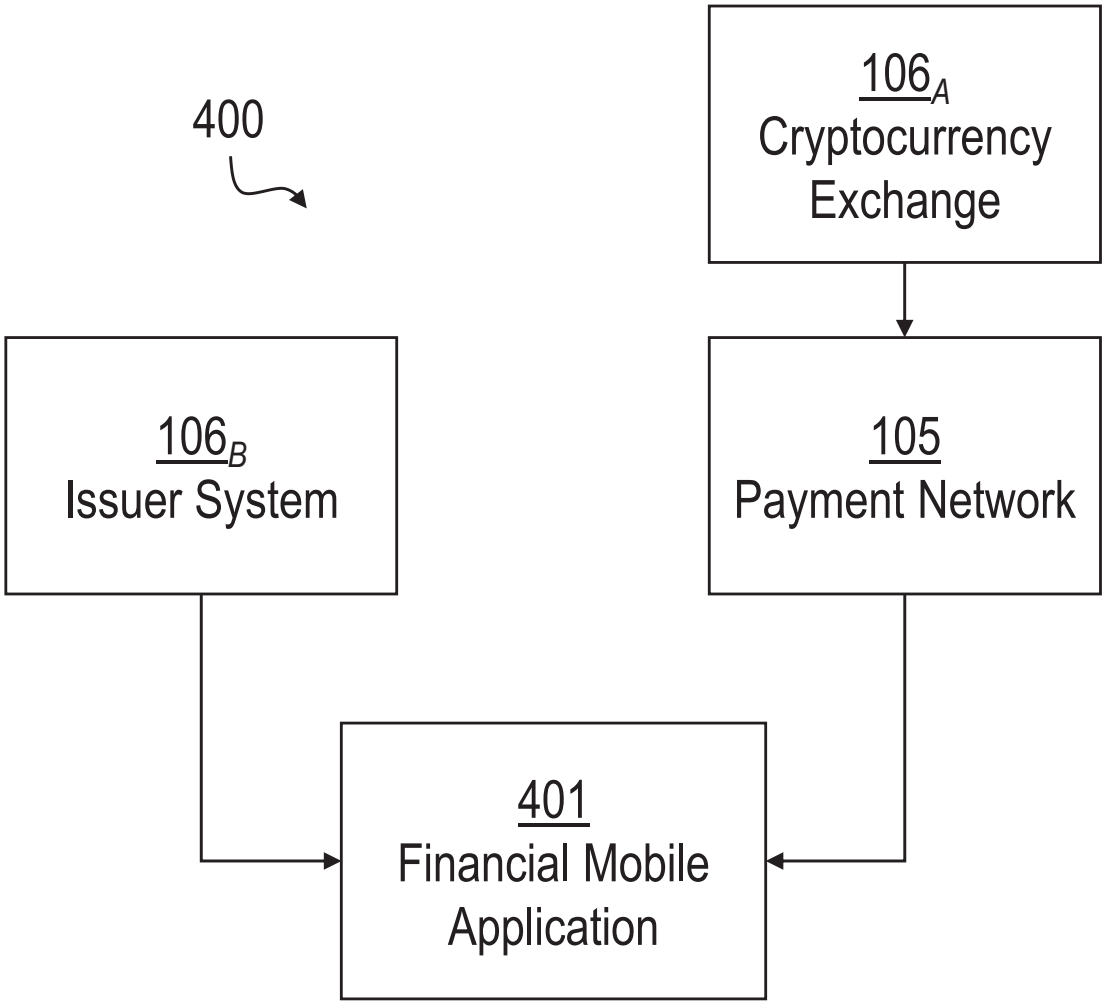
400
106A
Cryptocurrency
Exchange
106B
Issuer System
105
Payment Network
401
Financial Mobile
Application

FIG. 4

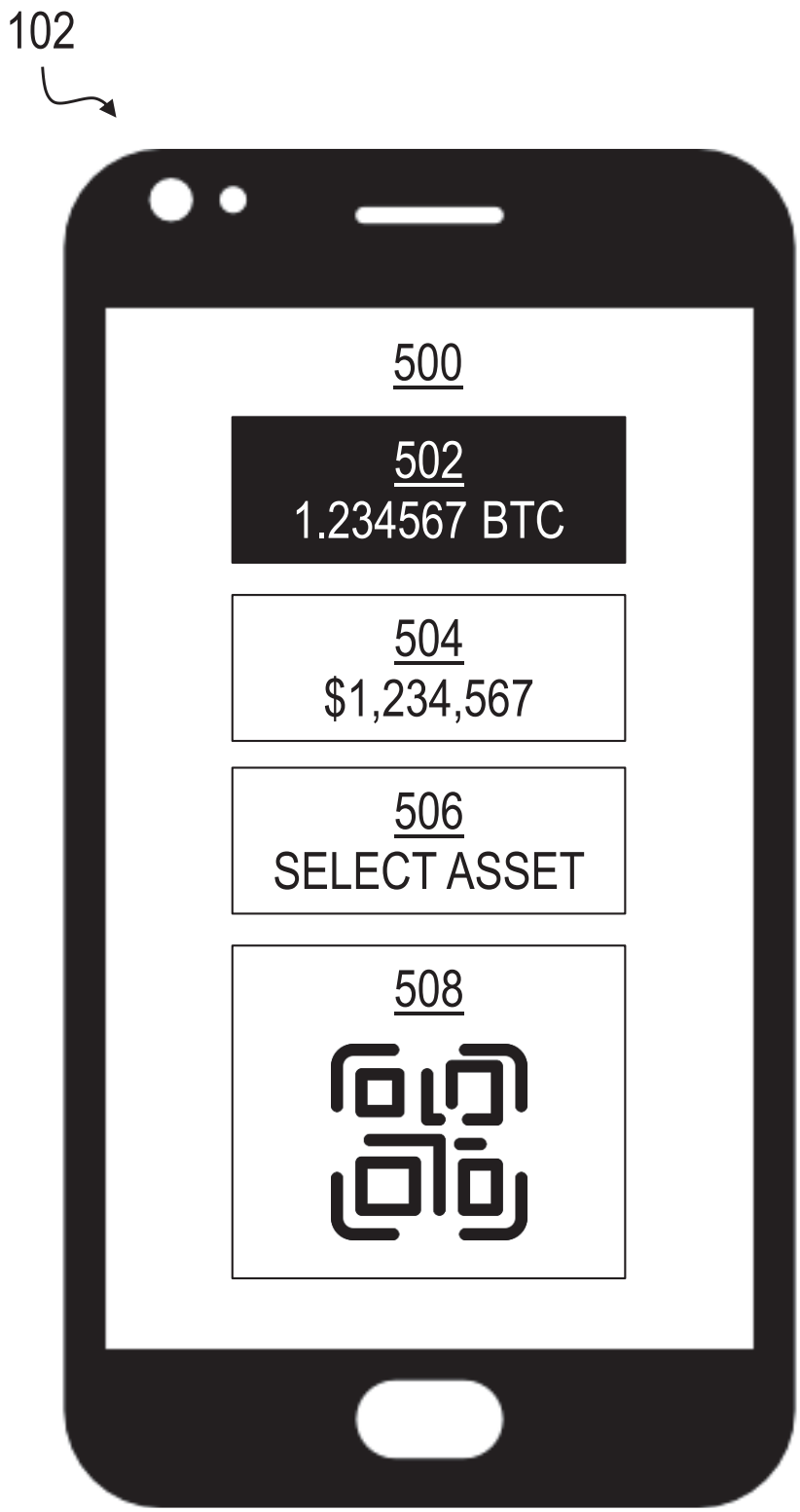

FIG. 5

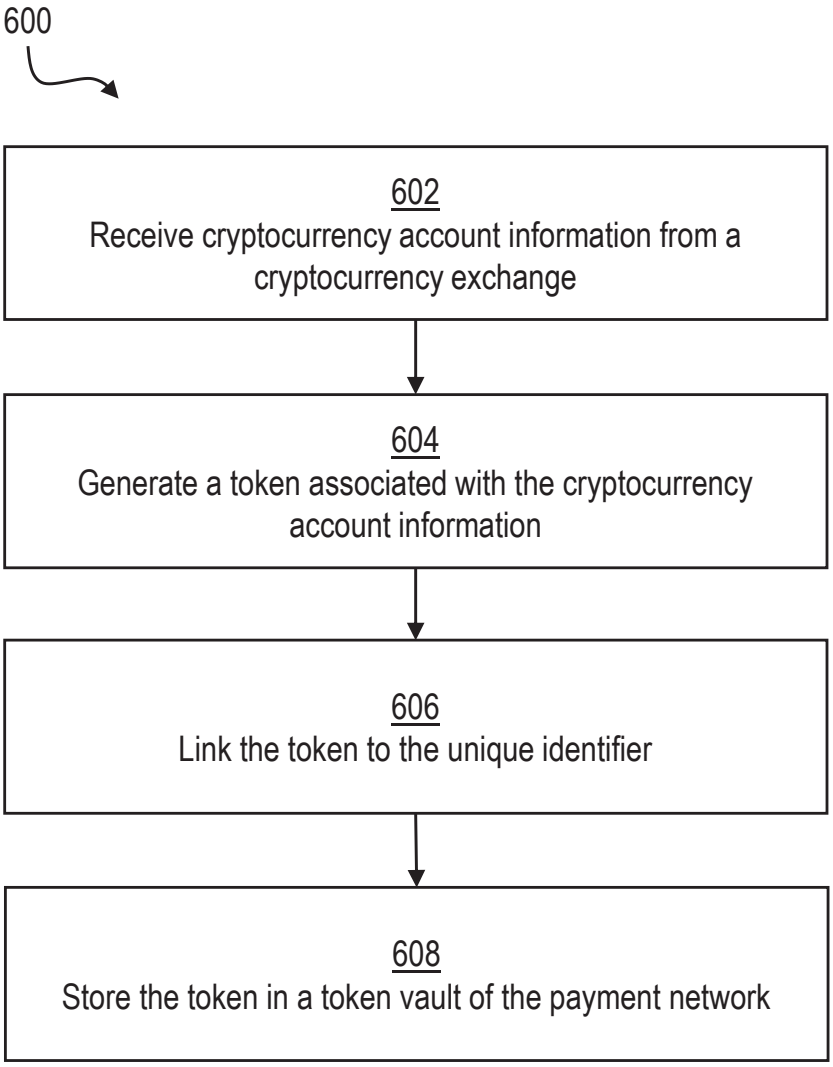
600
602
Receive cryptocurrency account information from a cryptocurrency exchange
604
Generate a token associated with the cryptocurrency account information
606
Link the token to the unique identifier
608
Store the token in a token vault of the payment network

FIG. 6

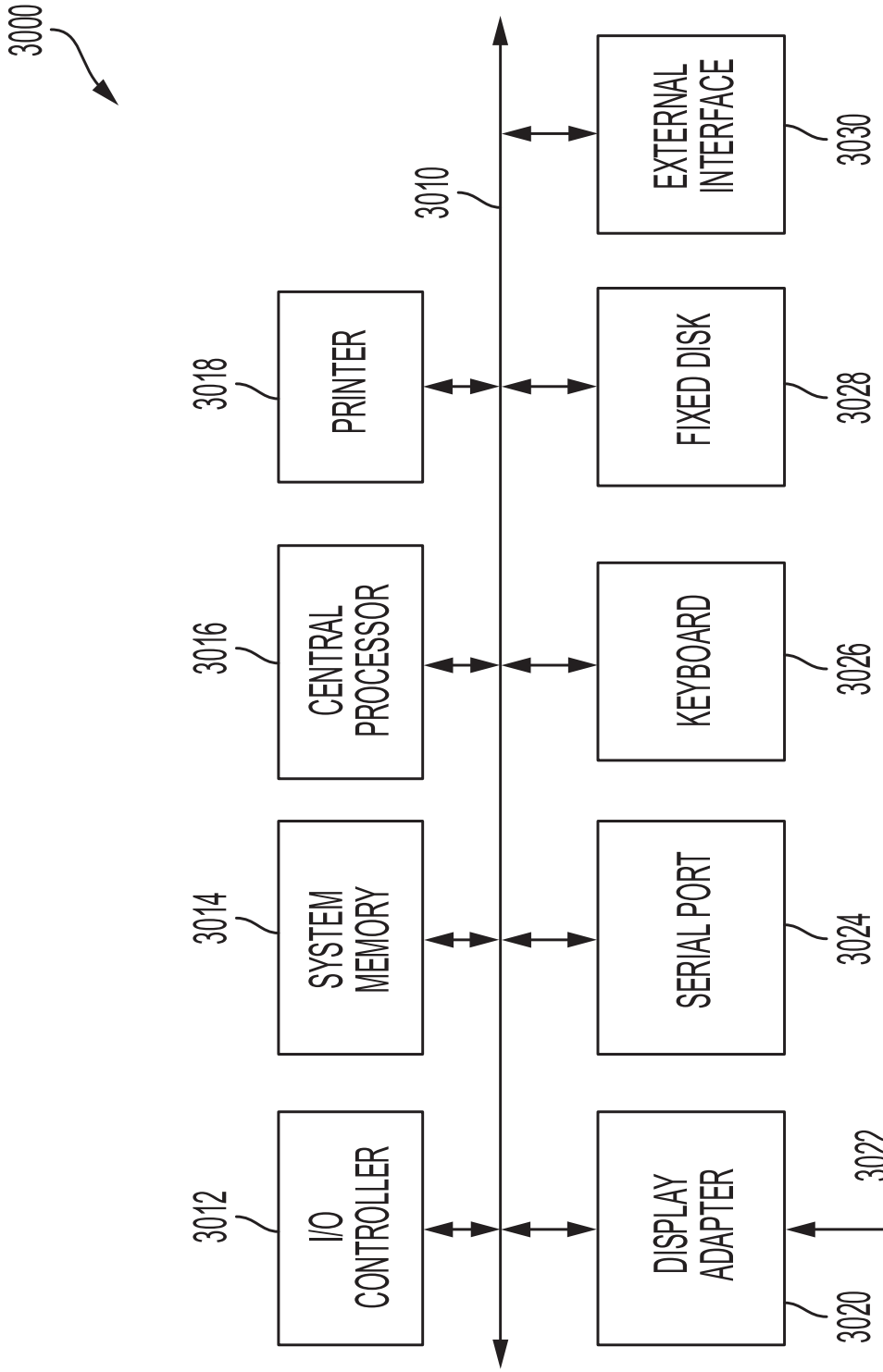
3000
3010
3012
I/O CONTROLLER
3014
SYSTEM MEMORY
3016
CENTRAL PROCESSOR
3018
PRINTER
3020
DISPLAY ADAPTER
3022
MONITOR
3024
SERIAL PORT
3026
KEYBOARD
3028
FIXED DISK
3030
EXTERNAL INTERFACE

FIG. 7

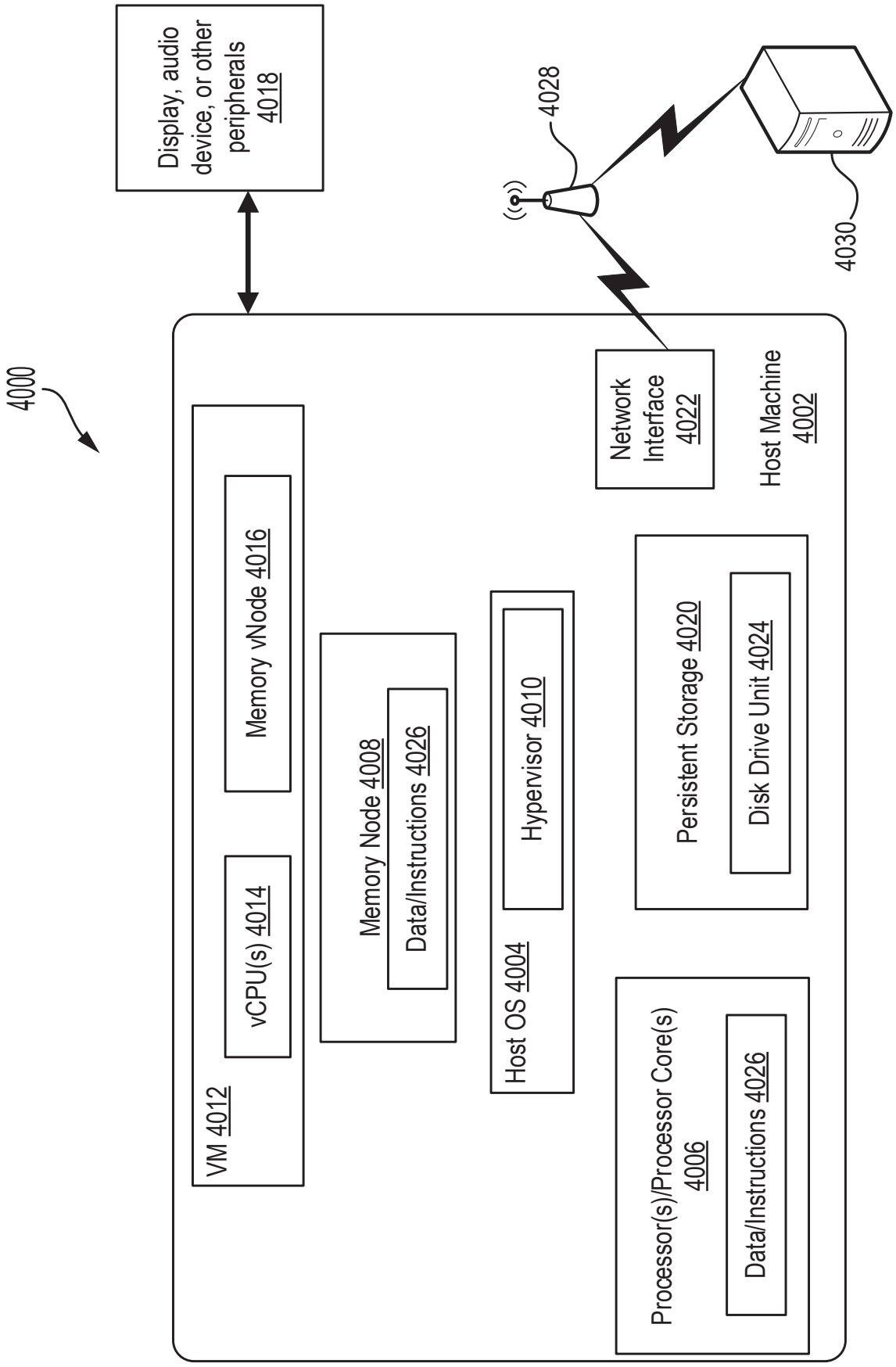
4000
Display, audio device, or other peripherals 4018
4028
4030
Network Interface 4022
Host Machine 4002
VM 4012
vCPU(s) 4014
Memory vNode 4016
Memory Node 4008
Data/Instructions 4026
Host OS 4004
Hypervisor 4010
Persistent Storage 4020
Disk Drive Unit 4024
Processor(s)/Processor Core(s) 4006
Data/Instructions 4026

FIG. 8