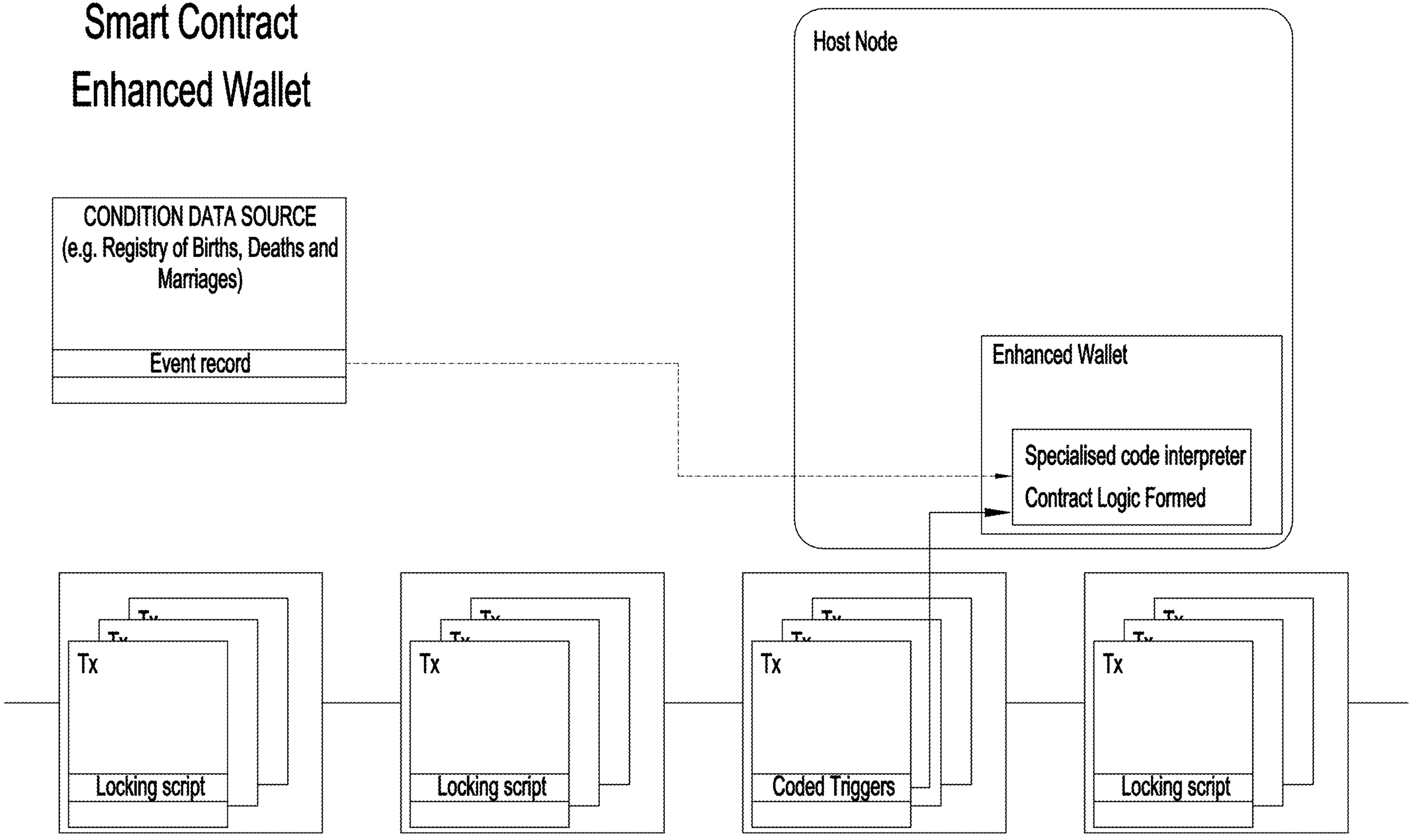
Smart Contract
Enhanced Wallet
CONDITION DATA SOURCE
(e.g. Registry of Births, Deaths and Marriages)
Event record
Host Node
Enhanced Wallet
Specialised code interpreter
Contract Logic Formed
Tx
Locking script
Tx
Locking script
Tx
Coded Triggers
Tx
Locking script

Fig. 1

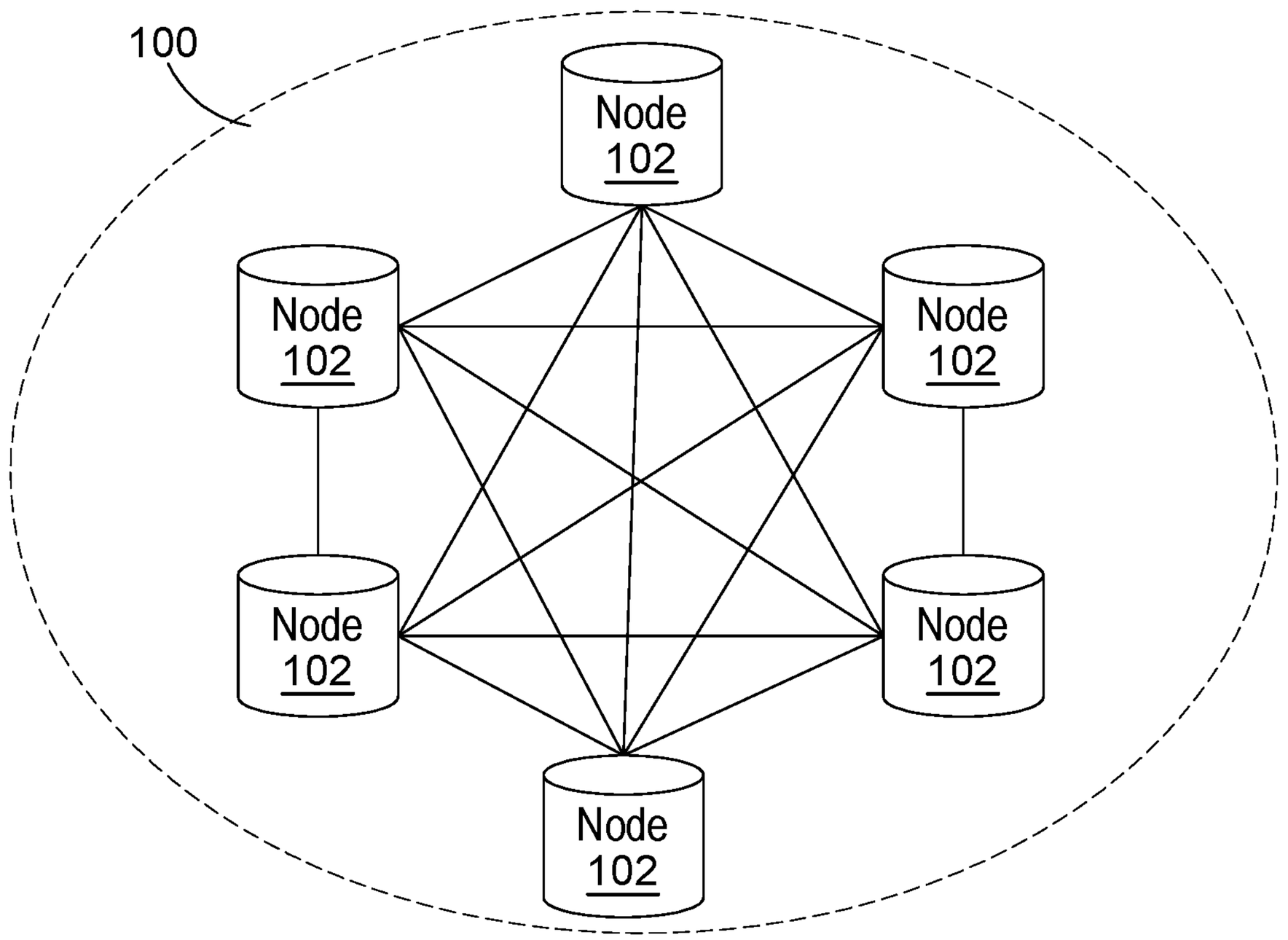

Fig. 2
(Prior Art)

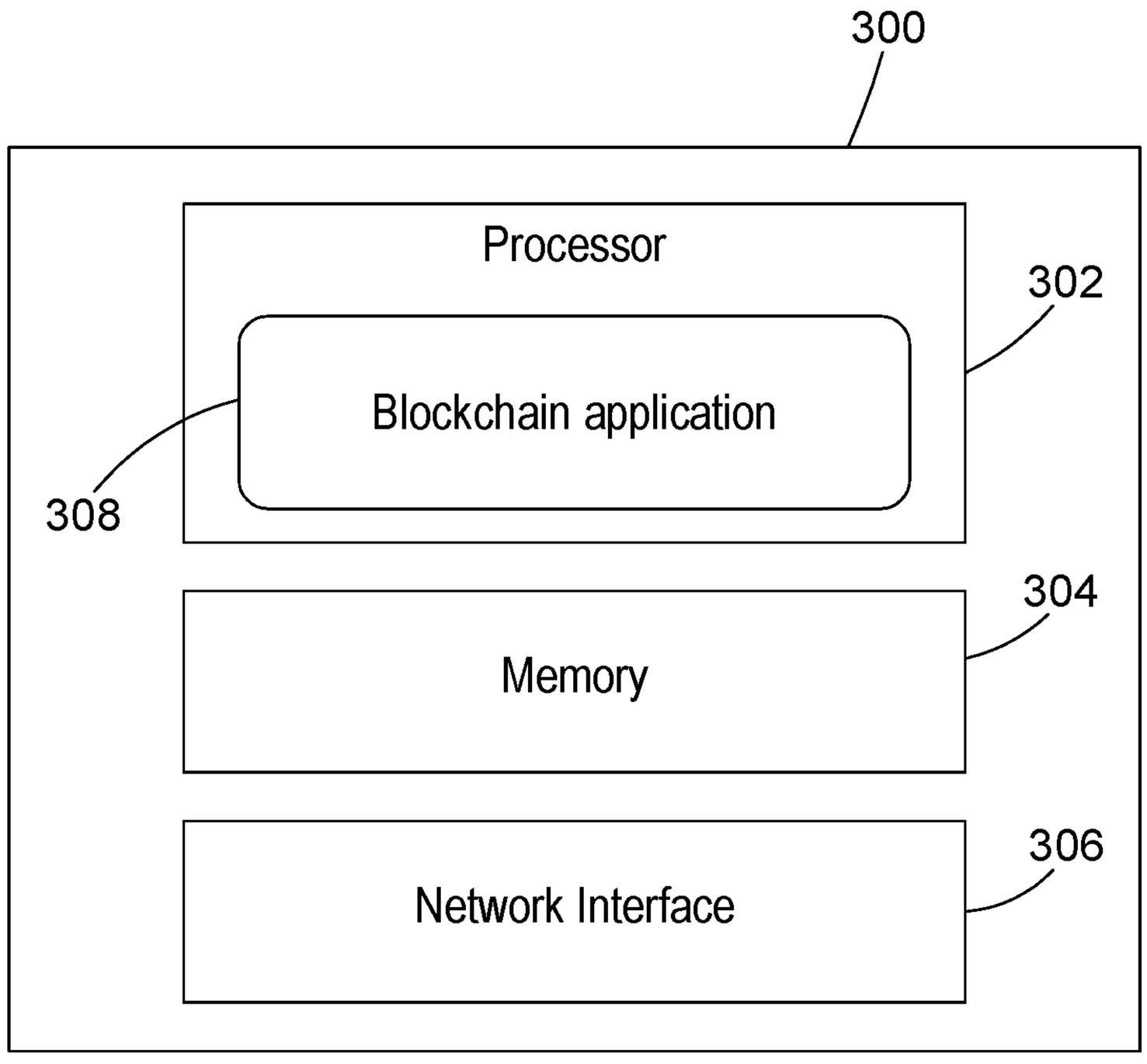
300
Processor
302
Blockchain application
308
304
Memory
306
Network Interface

Fig. 3