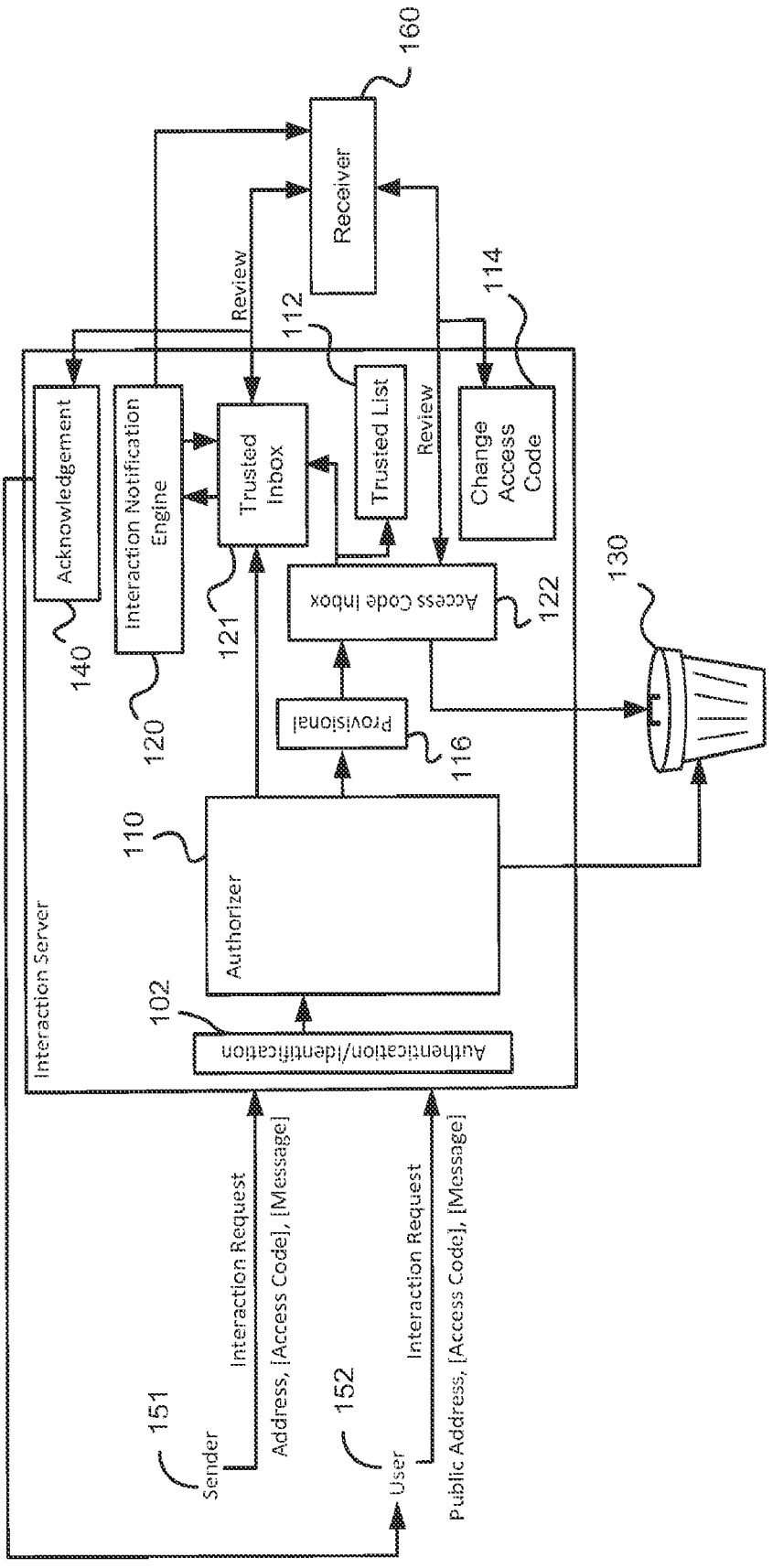
Interaction Server
Authentication/Identification
102
Authorizer
110
Provisional
116
Interaction Notification Engine
120
Acknowledgement
140
Trusted Inbox
121
Access Code Inbox
122
Trusted List
112
Change Access Code
114
Review
Review
Receiver
160
130
Sender
151
User
152
Interaction Request
Address, [Access Code], [Message]
Interaction Request
Public Address, [Access Code], [Message]
100

FIG. 1

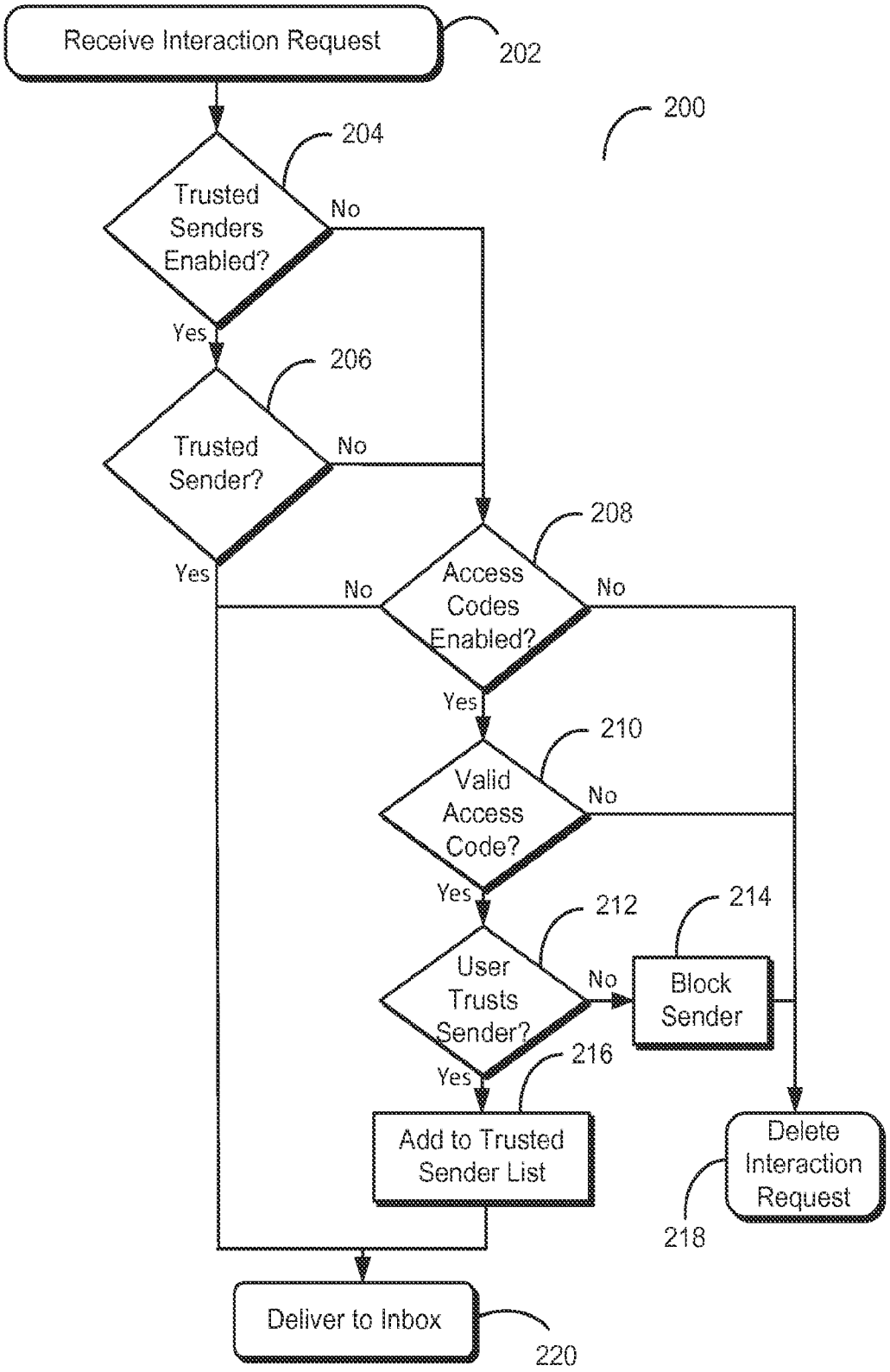
Receive Interaction Request
202
200
204
Trusted Senders Enabled?
No
Yes
206
Trusted Sender?
No
Yes
208
Access Codes Enabled?
No
No
Yes
210
Valid Access Code?
No
Yes
212
User Trusts Sender?
No
214
Block Sender
Yes
216
Add to Trusted Sender List
Delete Interaction Request
218
Deliver to Inbox
220

FIG. 2

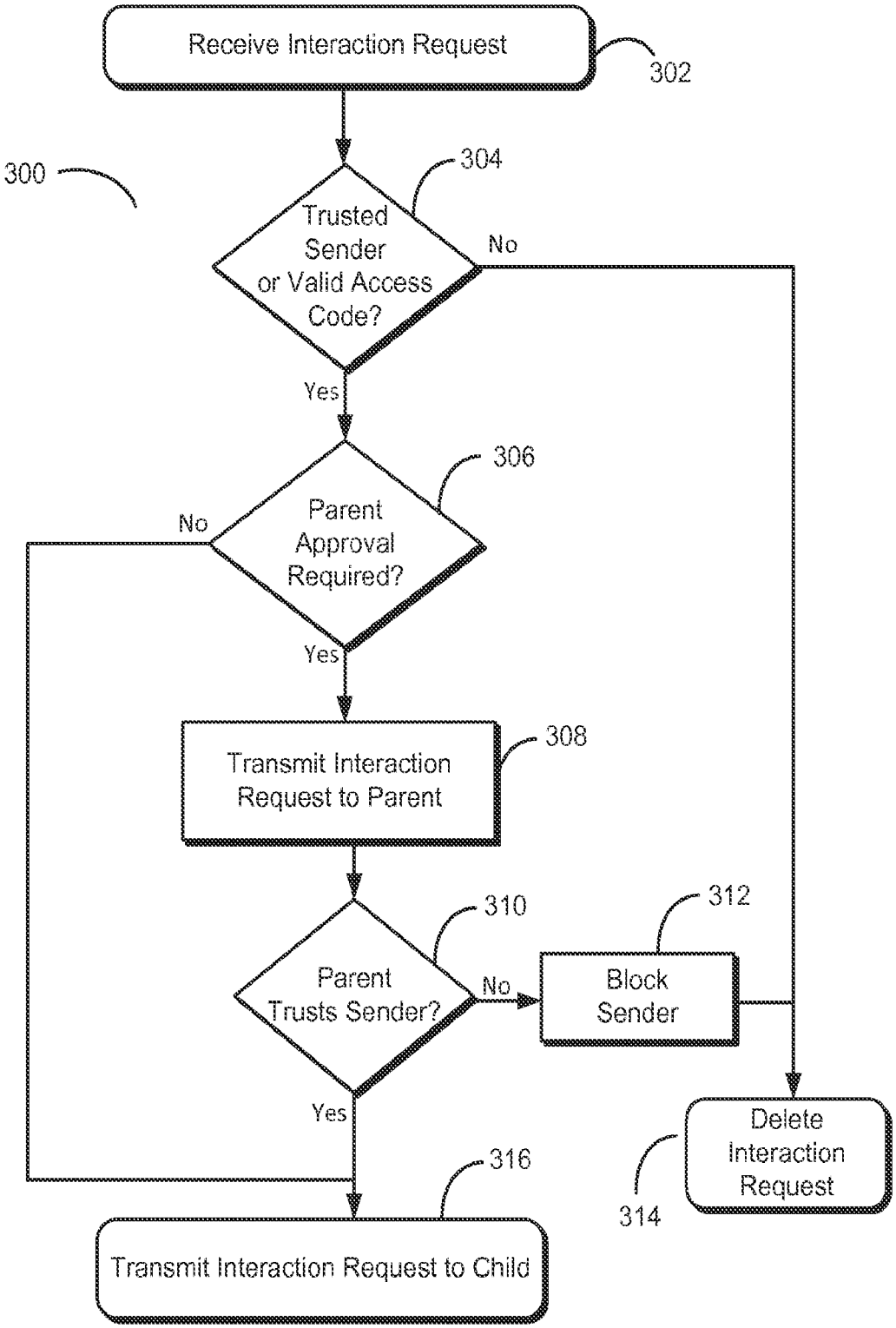
Receive Interaction Request
302
300
304
Trusted Sender or Valid Access Code?
No
Yes
306
Parent Approval Required?
No
Yes
308
Transmit Interaction Request to Parent
310
Parent Trusts Sender?
No
312
Block Sender
Yes
Delete Interaction Request
314
316
Transmit Interaction Request to Child

FIG. 3

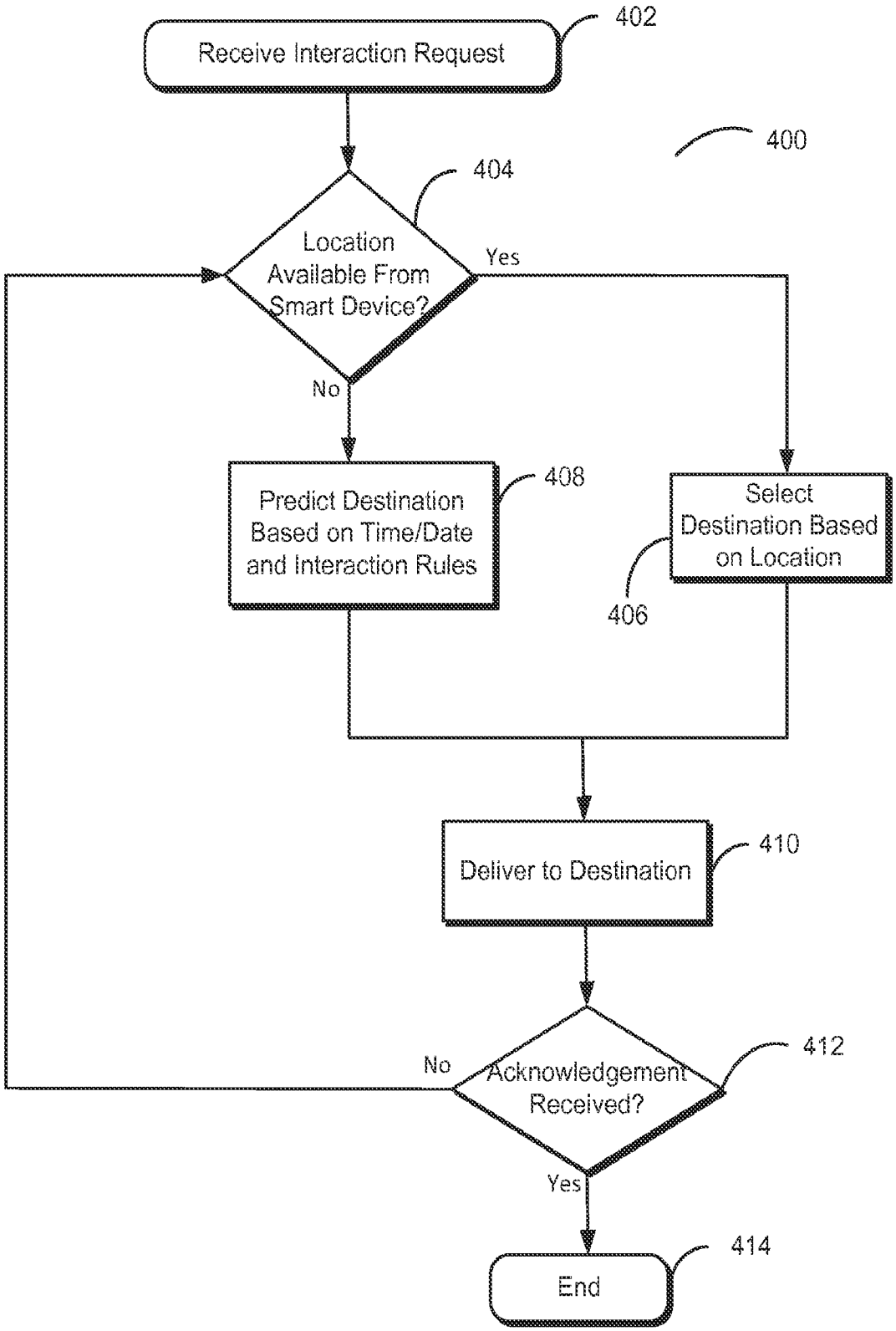
Receive Interaction Request
402
400
404
Location Available From Smart Device?
Yes
No
Predict Destination Based on Time/Date and Interaction Rules
408
Select Destination Based on Location
406
Deliver to Destination
410
Acknowledgement Received?
412
No
Yes
End
414

FIG. 4

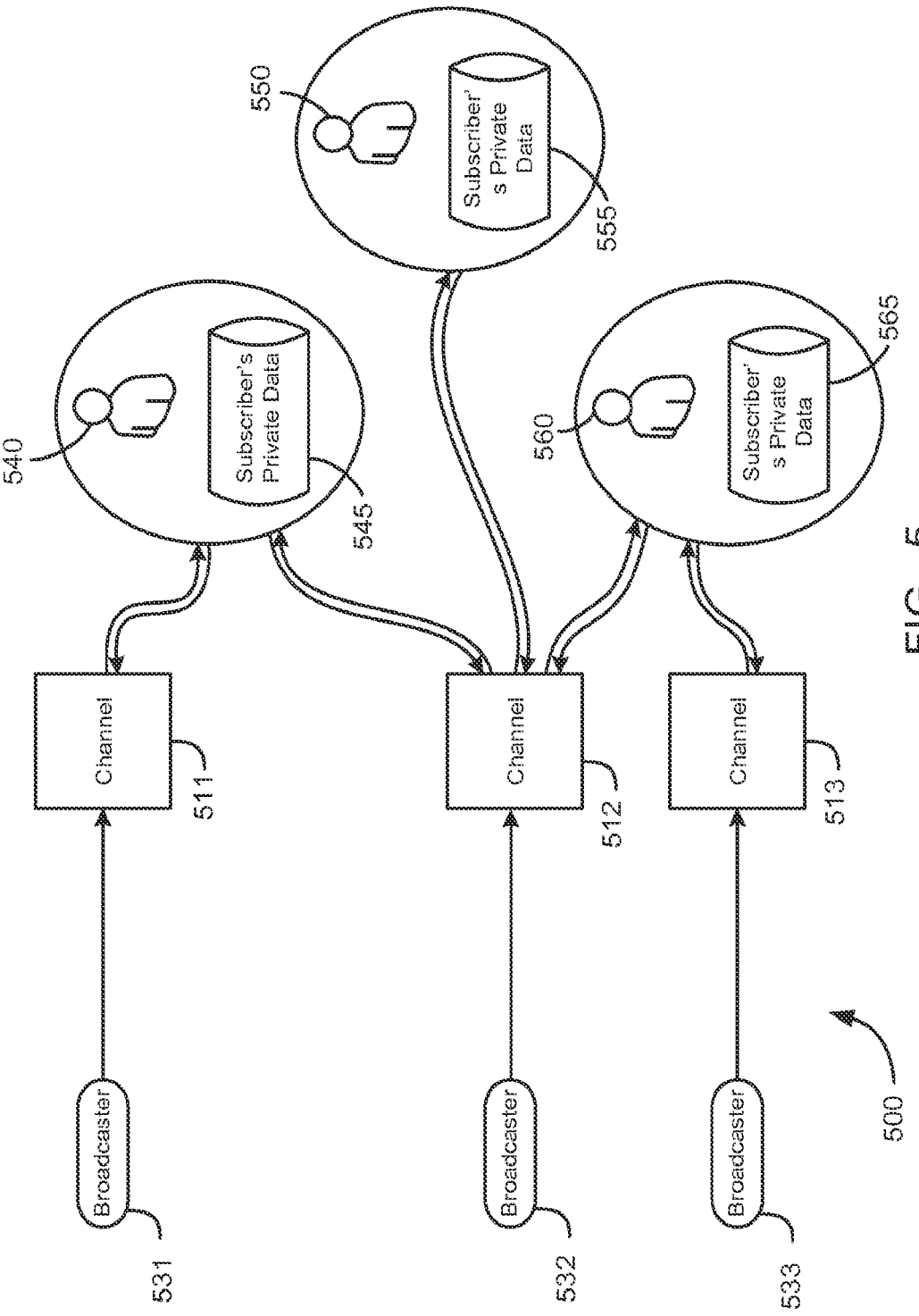
550
Subscriber's Private Data
555
540
Subscriber's Private Data
545
560
Subscriber's Private Data
565
Channel
511
Channel
512
Channel
513
Broadcaster
531
Broadcaster
532
Broadcaster
533
500

FIG. 5

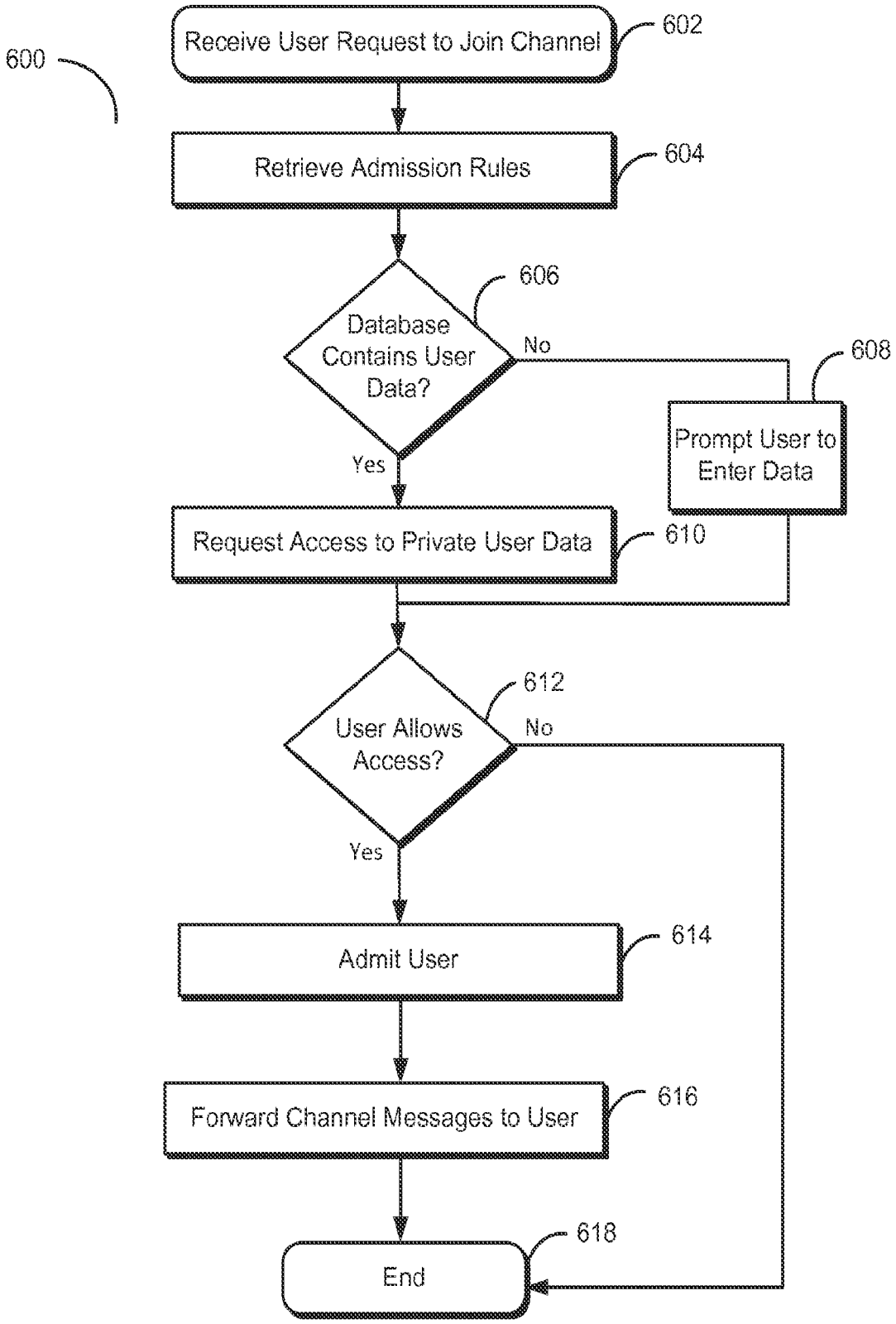
600
Receive User Request to Join Channel
602
Retrieve Admission Rules
604
Database Contains User Data?
606
No
608
Prompt User to Enter Data
Yes
Request Access to Private User Data
610
User Allows Access?
612
No
Yes
Admit User
614
Forward Channel Messages to User
616
End
618

FIG. 6

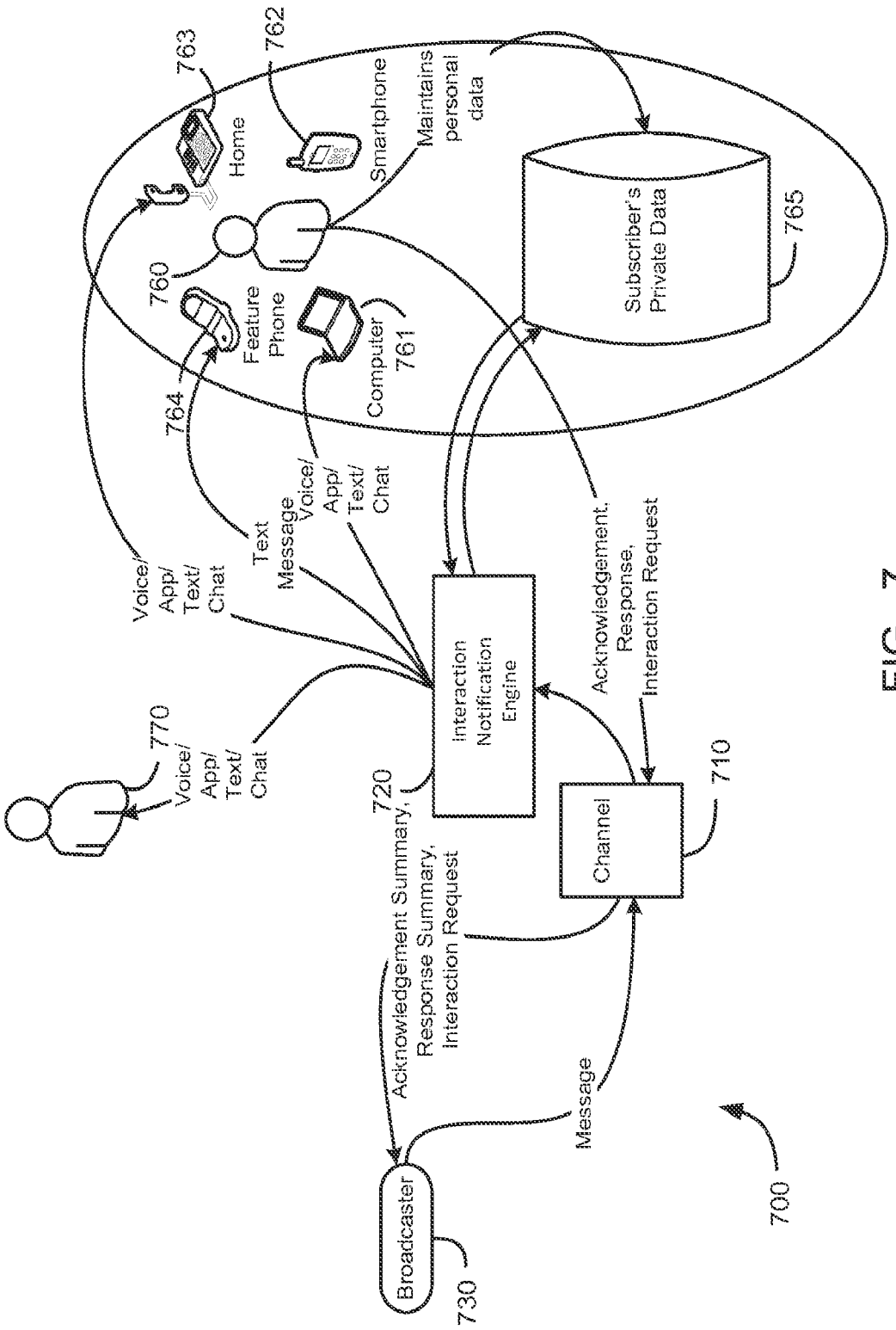
763
762
Home
Smartphone
Maintains personal data
760
Feature Phone
Computer
761
764
Subscriber's Private Data
765
Voice/ App/ Text/ Chat
Text Message
Voice/ App/ Text/ Chat
Voice/ App/ Text/ Chat
770
720
Interaction Notification Engine
Acknowledgement, Response, Interaction Request
710
Channel
Acknowledgement Summary, Response Summary, Interaction Request
Message
Broadcaster
730
700

FIG. 7

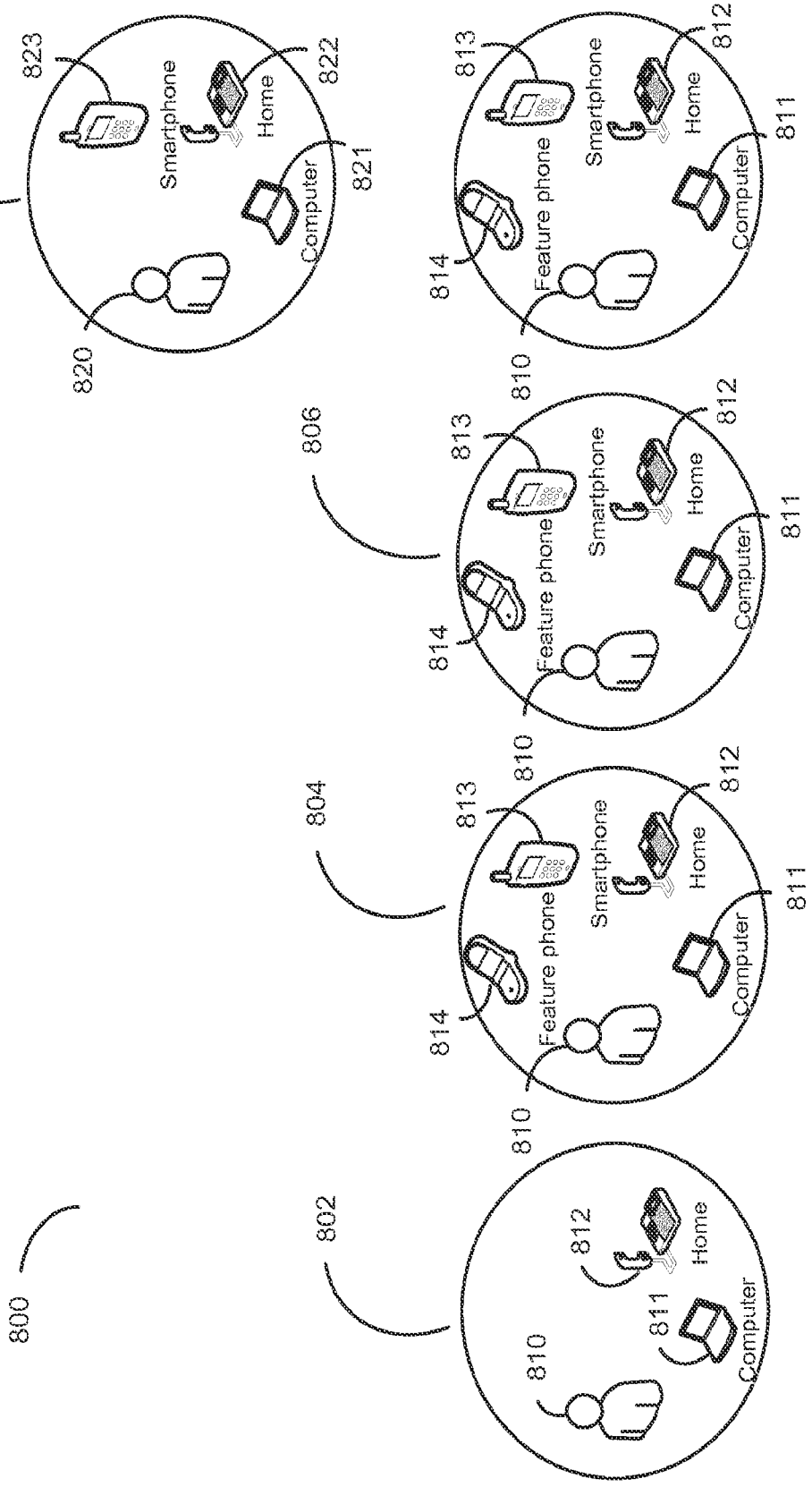
800
802
804
806
808
810
811
812
813
814
820
821
822
823
Computer
Home
Smartphone
Feature phone

FIG. 8

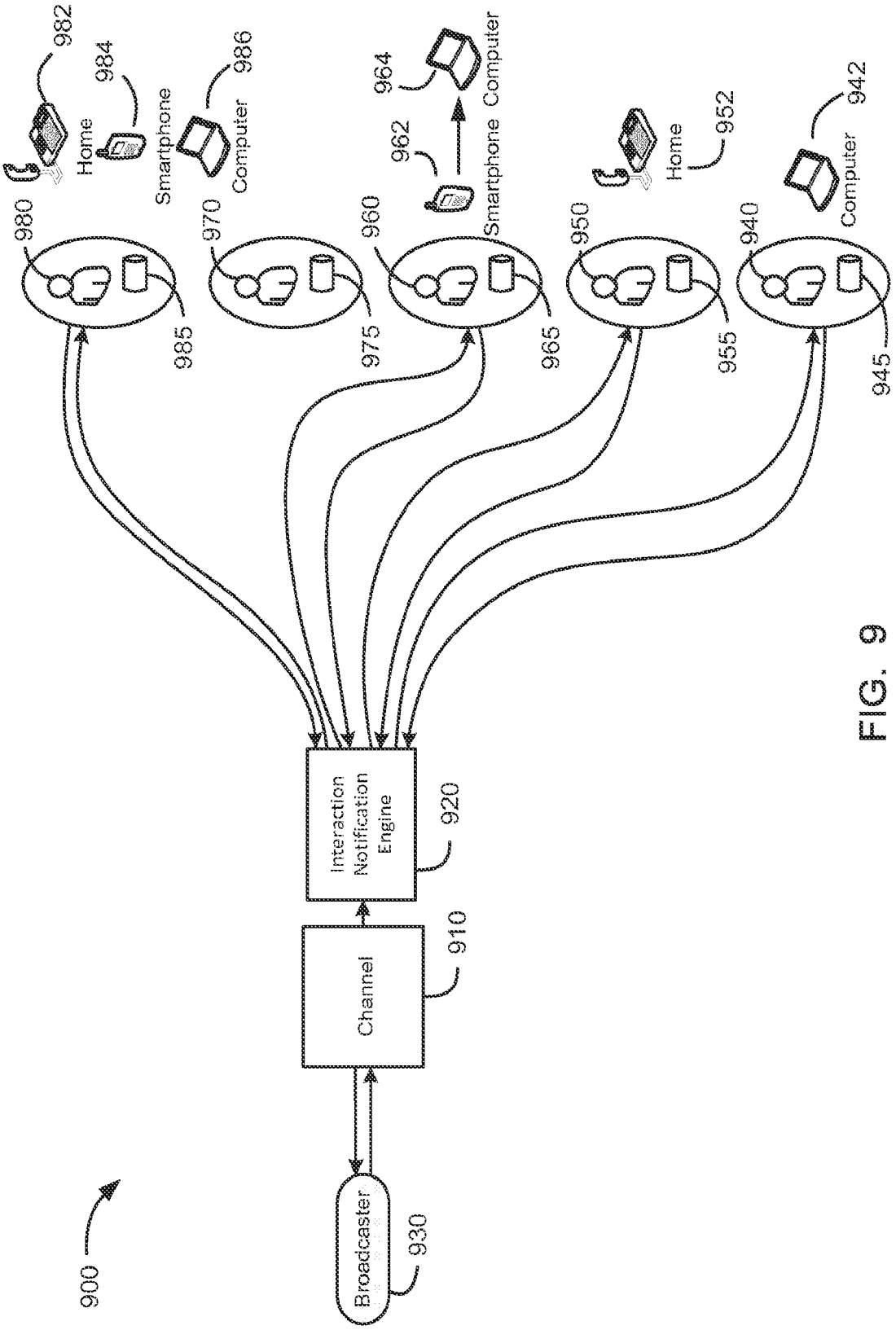
900
Broadcaster
930
Channel
910
Interaction Notification Engine
920
980
982
Home
984
Smartphone
985
970
986
Computer
975
960
962
Smartphone
964
Computer
965
950
Home
952
955
940
Computer
942
945

FIG. 9

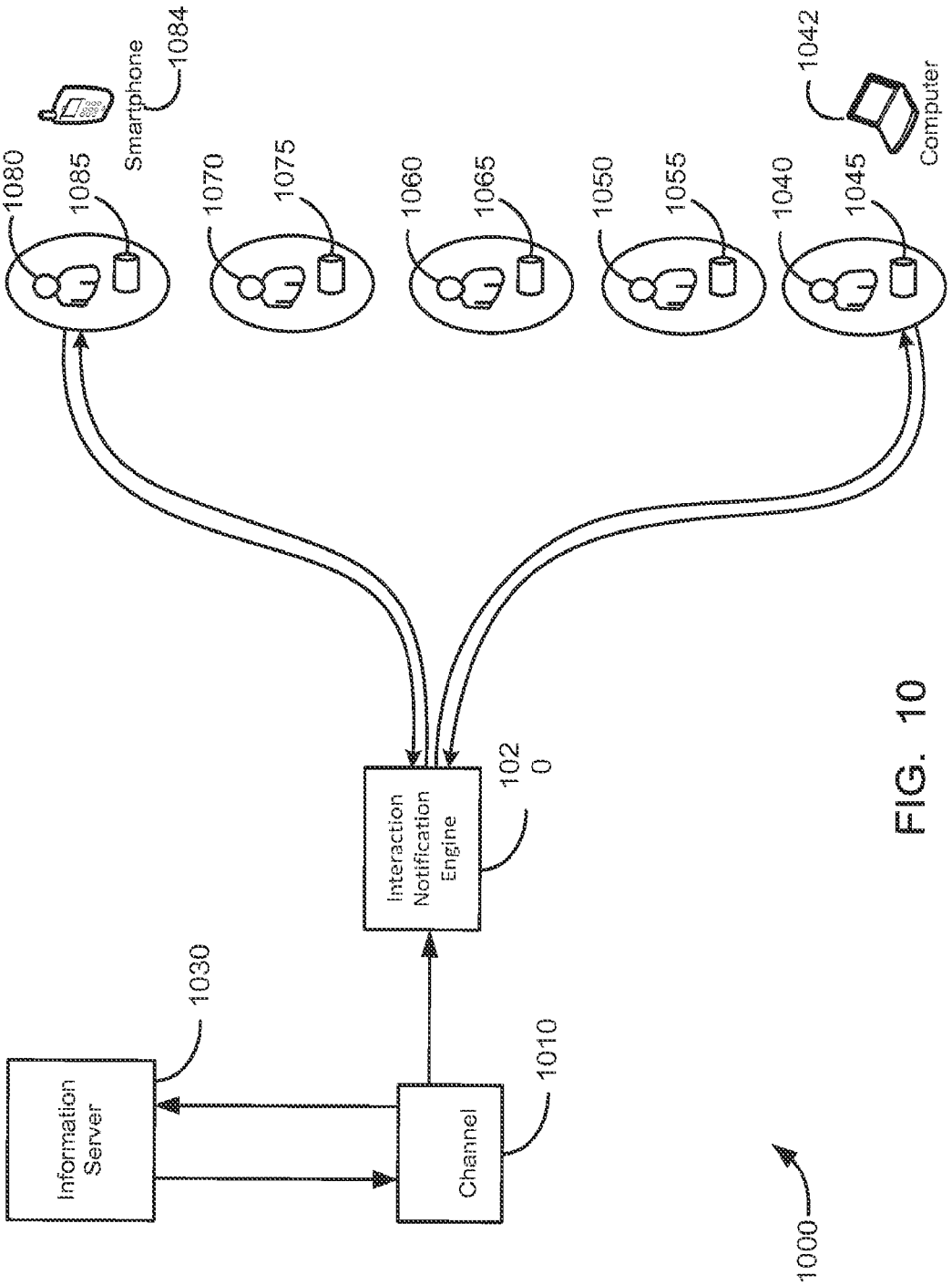
1000
Information Server
1030
Channel
1010
Interaction Notification Engine
1020
1080
1085
Smartphone
1084
1070
1075
1060
1065
1050
1055
1040
1045
1042
Computer

FIG. 10

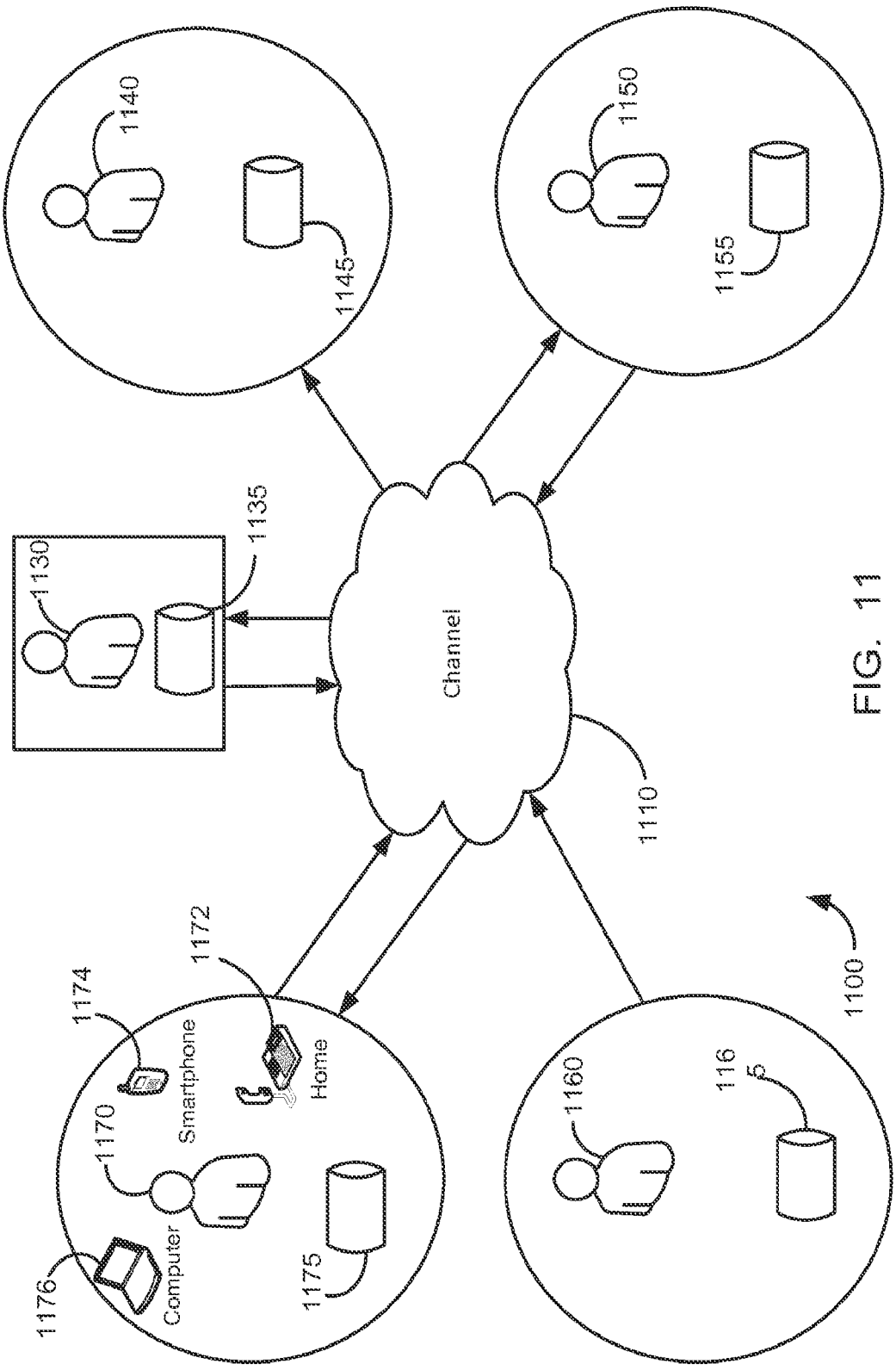
1140
1145
1150
1155
1130
1135
Channel
1110
1174
1172
Smartphone
Home
1170
Computer
1176
1175
1160
116
5
1100

FIG. 11