This Sheet Has Been Replaced



THIS SHEET HAS BEEN REPLACED

Device for overload protection and braking of a machine part driven by a motor

The invention relates to a braking device having the features stated in the preamble of Claim 1.

One problem with high-speed punching and bending machines consists in preventing or limiting, as far as possible, damage to the tool in the event of the tool being subjected to an excessive load. For this, it is known to use an overload clutch which, if a predetermined load (torque) is exceeded, separates off the drive train from the motor to the tool or, as in the case of a slip clutch, limits the torque transmitted by the drive shaft. As a result of the momentum of the masses located downstream of the overload clutch, they continue to move when the overload clutch responds, even if it completely releases the masses located downstream thereof in the drive train from the motor. The object therefore remains to brake masses which continue to move as quickly as possible before they can cause relatively severe damage. If a brake is arranged between the motor and the overload clutch, then as a result of such a brake the motor but not the section of the drive train disengaged by the overload clutch as far as the tool can be braked and stopped. If, one the other hand, the brake is arranged downstream of the overload clutch, then with its aid the tool can be braked to a standstill and damage avoided, provided the brake acts quickly enough. Unfortunately, the masses which are to be braked in the drive train downstream of the overload clutch (tools and gears) are generally greater than the masses located in the section of the drive train lying upstream of the overload clutch. A brake lying in the drive train downstream of the overload clutch therefore has to be of correspondingly strong design, which is unfavourable for the braking period. The braking period is composed of an excitation period, characteristic of the construction of the respective brake, and the period of purely braking until the movement energy is consumed. Pneumatic and hydraulic brakes necessitate longer excitation periods to control the valves and build up the necessary pressure in the braking

This Sheet Has Been Replaced



THIS SHEET HAS BEEN REPLACED

device than do electromagnetic brakes, but can apply large braking moments. For electromagnetic brakes, rapid-response devices which enable the excitation period of the braking coil to be minimal but have a longer braking period are known. A short braking period is significant in punching and bending machines, in particular machines for trimming and shaping the pins of integrated circuits (ICs) in which the tool is driven by way of a cam gear, in other words the forward and backward movement of the tool is determined by a roller which rolls on the cam surface of a rotating cam disc. One revolution of the cam disc in this case corresponds to one work cycle of the machine, during which the tool is positioned, the position checked, the tool advanced to machine the workpiece (working stroke) and retracted again (return stroke) and the workpiece is moved on or removed. Experience has shown that to control the tool movement approximately half a revolution of the cam disc is needed. For the workpiece transporting, the workpiece positioning, the checking measurement as to whether the workpiece position is correct and for any stopping of the machine if the workpiece position is incorrect, there is therefore only approximately half a revolution of the cam disc available. For this reason, a lengthening or shortening of the brake angle has an effect of a factor of up to 2 on the cycle time of the machine, that is to say lengthening the braking period brings about a considerable lengthening of the cycle time. In order to obtain high-speed machines it is therefore crucial to be able to stop the tool very rapidly if necessary in order to be able to prevent destruction of the tool in the event of a wrongly positioned workpiece.

Hitherto, efforts have been made to obviate these problems in that the effectiveness of the brake arranged between the overload clutch and the area to be protected (tool) has been increased and its response time reduced, and the brake has been arranged as close as possible to the area to be protected at the end of the drive train in order to reduce a reduction in the maximum moment occurring, produced by the released mass inertia. These, however, are subject to certain limits, especially since high

This Sheet Has Been Replaced



THIS SHEET HAS BEEN REPLACED

braking moments are required, resulting in turn in relatively large braking units with high mass inertia of the braking device itself.

The object of the invention is to provide a device for braking a motor-driven machine part by means of which particularly rapid stopping of the driven machine part is possible, both on deliberate braking and in the event of disruption, and furthermore to limit the maximum moment occurring in the event of overload and thus the maximum load peak acting on the tools.

This object is achieved by a device having the features specified in Claim 1. Advantageous embodiments of the invention are the subject-matter of the subclaims.

In accordance with the invention there is provided in the drive train between the motor and the driven machine part a combination of a brake, an overload clutch and a freewheel which runs freely during driving of the machine part but which blocks on braking of the driven machine part. In this arrangement, the brake is located in the drive train upstream of the overload clutch and the freewheel is located downstream of the overload clutch.

If the brake is triggered deliberately or by a sensor which for example reports that a workpiece on which the driven machine part (tool) is to act is not positioned correctly, then first of all the momentum of all the moving masses acts on the brake and the braking procedure means that the torque threshold at which the overload clutch responds is reached very rapidly. From this point on, for a brief period until the freewheel blocks, the brake does not need to brake the masses located downstream of the overload clutch but only a relatively small mass, so that the brake very rapidly comes to a standstill. However, the response of the overload clutch does not result in the released machine part being able to continue to move freely, since the freewheel now comes into effect automatically and after passing through its clamping angle, which should be small, blocks and takes up the

This Sheet Has Been Replaced



THIS SHEET HAS BEEN REPLACED

remaining momentum of the driven machine part which is now to be braked (tool) and introduces it into the brake which, because it is located in between, in practice abruptly consumes the energy; the stopping moment of the brake is large enough for the drive shaft not to start to move again. Here, the blocking direction of the freewheel is the same as the driving direction.

If the brake is not triggered deliberately, but rather there is an excessive load in the drive train during which the torque threshold of the overload clutch is exceeded, the latter responds; this can be used in accordance with the invention to trigger the braking device. The braking device is capable of stopping the drive shaft very rapidly, because the freewheel does not block at first and thus at first it is not the momentum of the moving masses downstream of the freewheel but only the momentum of the moving masses upstream of the freewheel which must be taken up and braked. Thus, the brake may be relatively small, with a small braking action developed, and this additionally promotes a short braking period. The mass to be braked by the brake during this phase is particularly small if a further clutch is provided between the brake and the motor in order to decouple the motor, since in this case the brake does not have to brake the momentum mass of the motor as well when the overload clutch responds. Preferably, this further clutch is provided in the form of a clutch/brake combination, in other words as a structural unit comprising a clutch and a brake, since this permits the possibility of masses to be minimally braked as a result of the compact construction. Because the mass to be braked by the brake is small, it comes to a standstill rapidly. Clamping of the freewheel thus also takes places very rapidly. The blocking freewheel takes up the remaining momentum of the masses in the drive train downstream of the overload clutch (on the tool side) in the manner of a buffer stop and introduces the energy into the already stationary brake, whereof the stopping moment is so great that the drive shaft does not start to move again.

This Sheet Has Been Replaced



THIS SHEET HAS BEEN REPLACED

The braking device in accordance with the invention is particularly suitable for high-speed punching and bending machines, in particular such machines whereof the tools are driven mechanically by cam gears and in which the moving masses and the braking moments required to stop them are not too great.

If a step-down gear is additionally provided between the output part of the overload clutch and the machine part to be braked or a cam gear located in between, it has the advantage that the clamping angle of the freewheel which leads to stoppage of the machine part is correspondingly reduced by the stepping down of the step-down gear on the side of the machine part, leading to a very small brake angle of the cam disc. Furthermore, the mass inertia, which is to be braked, of the cam gear is reduced to a power of 2 of the stepping down to the overload clutch and the brake. For the same reason, in an advantageous embodiment of the invention, a gear may also be provided between the overload clutch and the brake.

In order to trigger the braking procedure during the response of the overload clutch in the event of an overload, a sensor is preferably provided which monitors the relative position of the two halves of the overload clutch and emits a brake signal to the braking device as soon as the beginning of relative movement between the halves of the overload clutch is observed. This allows the overload to be recognized with virtually no delay and without a substantial increase in the moment beyond the set response moment of the overload clutch, and rapid braking to be initiated.

A suitable sensor is primarily a light barrier by means of which changes in position which are only fractions of a millimetre may be observed.

However, it is also possible to use a torque sensor lying somewhere within the drive train to trigger the braking procedure in the event of overload, or a power sensor in the driven machine

This Sheet Has Been Replaced



THIS SHEET HAS BEEN REPLACED

part.

An electromagnetic brake may be used as the brake, the electromagnet thereof being supplied with a high current for a short period when the brake is triggered. When a brake/clutch combination is used, the drive motor is also decoupled. Then it is not necessary to brake the motor.

An advantageous alternative consists in using as the motor for driving the machine part which is where appropriate to be braked a servomotor which may be controlled directly and therefore may also be stopped very quickly; such a servomotor may not only take on the function of driving but also of braking, so that a special brake is no longer required. Such a device is the subject-matter of Claim 2.

A particularly suitable overload clutch is a form-fitting clutch which disengages in the event of a torque threshold being exceeded, and which has a part which is torsionally rigid with respect to the drive shaft (drive part) and a disengaging part which is arranged rotatably on the drive shaft (output part). A form-fitting clutch of this type disengages when a predetermined torque threshold is reached and releases the remaining energy in the drive train downstream of the form-fitting clutch, this remaining energy being taken up by the blocking freewheel in the manner described above and being introduced into the brake, which in the meantime has come to a standstill. A form-fitting clutch of this type responds very rapidly. Its response threshold is conventionally determined by the tension of a spring by means of which the two clutch halves are pressed against one another. Preferably, a spring with a degressive characteristic curve is used in the form-fitting clutch. This means that the torque which may be transmitted by the clutch is reduced to a very small residual moment from the point at which the response begins. The use of a spring with a degressive characteristic curve contributes to the rapid response of the form-fitting clutch.

This Sheet Has Been Replaced



THIS SHEET HAS BEEN REPLACED

Slip clutches which are conventionally used as overload clutches are less suitable since they respond more slowly and thus transmit a higher residual moment.

In a freewheel there are conventionally two annular faces which are movable relative to one another and between which are arranged clamping bodies which permit free running in one direction of rotation and clamp when the direction of rotation is reversed. One of these annular faces could be constructed directly on the drive shaft, and preferably the annular faces are located on two rings, of which one is rigidly connected to the drive shaft and the other is rigidly connected to the output part of the overload clutch. The direction of blocking of the freewheel is the same as the drive direction.

The enclosed schematic drawings show an embodiment of the invention.

Figure 1 shows a view of a drive unit of a machine,

Figure 2 shows a side view of a cam disc of the drive unit shown in Figure 1,

Figure 3 shows a detail of a form-fitting clutch in combination with a sprag clutch as a component of the drive unit shown in Figure 1, partly in section,

Figure 4 shows a detail of the form-fitting clutch of Figure 3 in the disengaged position,

Figure 5 shows the cross-section V-V through the sprag clutch, in accordance with Figure 3,

Figure 6 shows a torque/time characteristic curve in a deliberately triggered braking procedure, and

Figure 7 shows a torque/time characteristic curve in the event

This Sheet Has Been Replaced



THIS SHEET HAS BEEN REPLACED

of overload.

Arranged in the drive unit on a common drive shaft 1 behind one another are an electric motor 2, a structural unit 3 comprising an electromagnetic brake and a clutch for decoupling the motor 2, as the overload clutch a form-fitting clutch 4 which disengages when a torque threshold is exceeded, a toothed wheel 5 and a freewheel 6 (a one-way clutch with a sprag-type blocking arrangement). The driving toothed wheel 5 drives a further toothed wheel 8 by means of a toothed belt 7, which wheel is seated on a driven shaft 9 held in a gear casing 10 and carrying a plurality of cam discs 11 in the gear casing.

The form-fitting clutch 4 has a drive part 4a, comprising a hub 12 and a flange 13, and is axially non-displaceable and torsionally rigidly connected to the shaft 1. The form-fitting clutch 4 further has an output part 4b which encases the hub 12 in an axially displaceable manner and is rotatable with respect thereto. For this purpose, a plurality of axially parallel pins 14 are disposed in the output part 4b and extend into bores 15 of a bearing ring 15 which is rotatably held on the hub 12 by means of rollers 16. The bearing ring 15 is torsionally rigidly connected to the toothed wheel 5 and this is in turn torsionally rigidly connected to the outer ring 6a of the freewheel, while the inner ring 6b of the freewheel is torsionally rigidly connected to the drive shaft 1 by a wedge 17. Between the outer ring 6a and the inner ring 6b clamping bodies 18 are provided in the freewheel and arranged in such a way that the freewheel runs freely while the toothed wheel 5 is driven but blocks if the shaft 1 is braked and the form-fitting clutch 4 disengages.

In the mutually facing surfaces of the drive part 4a and the output part 4b of the form-fitting clutch, there are provided notches 19 and 20 opposite one another in pairs and extending radially and serving to receive rollers 21 which keep the drive part and the output part at a small distance from one another. By means of springs (not shown) acting between the output part

This Sheet Has Been Replaced



THIS SHEET HAS BEEN REPLACED

4b and the bearing ring 15, the output part 4b is permanently pressed against the drive part 4a. The spring force, the diameter of the rollers 21 and the shape of the notches 19 and 20 determine a torque threshold beyond which the drive part 4a and the output part 4b begin to rotate in relation to one another, with the output part 4b moving away from the drive part 4a and the pins 15 moving deeper into the bearing ring 15 (see also Figures 3 and 4). So that this disengaging movement of the form-fitting clutch can be observed, a sensor 22, in particular a light barrier or the like, is provided and responds sensitively to the relative movement of the output part 4b with respect to the drive part 4a and thereupon conveys by way of a very rapid electrical connection a signal to the brake 3, which triggers the latter.

In a properly working machine, the motor 2 drives the drive shaft 1 and, with said shaft, the drive part 4a of the form-fitting clutch, which is engaged and entrains the toothed wheel 5. If the brake/clutch combination 3 is triggered without an overload occurring in the drive unit, whether deliberately or by a sensor which establishes that a workpiece in the working area of a driven tool is not positioned correctly, then with the motor 2 decoupled first the drive shaft 1 is braked and with it all the masses also associated therewith from the form-fitting clutch 4 by way of the gear 9, 11 to the tool, including the drive part 4a of the form-fitting clutch and the inner ring 6b of the sprag clutch 6. The torque acting on the brake 3 and the form-fitting clutch 4 rises rapidly until the torque threshold M_A is reached, at which point the form-fitting clutch 4 is disengaged (see Figure 6). During the disengaging movement there is a temporary decline in the torque acting on the brake 3 (area C in Figure 6), because the masses in the drive train are decoupled from the brake 3 downstream of the form-fitting clutch 4, and the drive shaft 1 comes to a standstill. During the disengaging movement, the rollers 21 move out of the notches 19, with the output part 4b turning with respect to the drive part 4a (direction of movement Y in accordance with Figure 4). At the same time the

This Sheet Has Been Replaced

THIS SHEET HAS BEEN REPLACED

clamping movement of the freewheel 6 begins, because at this point the drive shaft 1 no longer drives the output part 4b and the inner ring 6b, but rather comes to a stop and the toothed wheel 8 and the cam shaft 9 are driven by way of the toothed belt 7 and the toothed wheel 5 drives the outer ring 6a of the freewheel 6 by its momentum until the freewheel blocks, abruptly brakes the momentum and takes up the braking moment occurring as a result, which now rises rapidly until a final value M_{br} is reached and thus the rotational movement of the toothed wheel 5 and the movement of the machine parts driven downstream thereof are stopped rapidly, because the freewheel 6 is stopped by the brake 3, which in the meantime has come to a standstill.

The setting of the form-fitting clutch according to the required drive moments of the driven machine parts (tools) has no influence on the disengaging behaviour of the form-fitting clutch and the maximum clamping angle of the freewheel. The clamping angle of the sprag clutch 6, which is in any case already small, is reduced further according to the step-down ratio of the toothed belt gear. This leads to a very small brake angle (a) at the cam disc 11 (see Figure 2). As almost half of the circumferential angle of the cam disc is needed for the tool movement (section d), and approximately the same circumferential section is needed for advancing or inserting the workpiece, there remains only a relatively small circumferential section (c) for fixing the workpiece and for the checking measurements of its position and also only a very small circumferential section (a) for the braking procedure which has to be triggered in the event that incorrect positioning is established. As lengthening of the braking period affects the cycle time (time for one revolution of the cam disc 11) approximately by a factor of 2, it is advantageous that using the invention means that the circumferential section (a) needed for braking can be kept very small.

If an overload occurs at the driven machine part, for instance in a tool which is driven by the cam discs 11 and may need

This Sheet Has Been Replaced

THIS SHEET HAS BEEN REPLACED

braking, the freewheel 6 remains unblocked at first to the rear in the freewheel direction and the form-fitting clutch 4 can disengage without obstruction in opposition to the drive direction Z, with the disengaging movement commencing when the torque threshold M_A is reached (Figure 7). A torque maximum M_1 produced during this is released by the form-fitting clutch 4 and the disengaging movement of the form-fitting clutch 4 comes to an end when the torque maximum M_1 is reached. Because the form-fitting clutch is arranged far downstream in the drive train, directly downstream of the brake 3, M_1 is relatively small, so that the load on the area of damage in the tool is correspondingly small. The braking device 3 is located in the area of least reduced mass inertia.

The disengagement of the form-fitting clutch 4 leads to the release of the gear members 5, 7, 8, 9, 11 downstream of the form-fitting clutch, and their kinetic energy still has to be taken up and dissipated. For this purpose, the sensor 22 is provided, and this triggers the brake/clutch combination 3 at the very beginning of the disengaging procedure, when the output part 4b is lifted away. During the disengagement of the form-fitting clutch, the braking device only has to brake very small amounts of mass inertia, namely that of the drive shaft 1, that of the drive part 4a of the form-fitting clutch and that of the inner ring 6b of the freewheel. The remaining amounts of mass inertia of the toothed belt transmission 5, 7 and 8 and the cam gear 9, 11, which are situated downstream of the outer ring 6a of the freewheel in the drive train, are taken up by the freewheel 6 with a slight delay when the shaft 1 is already braked, as soon as the freewheel 6 blocks. For this reason, within an extremely short braking period t2 after the response of the sensor 22, braking of the drive shaft 1 and then blocking of the freewheel 6 occur until the tool is stopped, as a result of which the torque maximum M_2, which would be produced as a result of the rotational energy of the gear members downstream of the freewheel 6 without gripping of the braking device and would result in damage to the tool, is limited to a non-critical maximum M_0 and

This Sheet Has Been Replaced



THIS SHEET HAS BEEN REPLACED

its period t3 of acting on the area of damage in the tool can be reduced. The tool has comes to a standstill after the period t3.

Between the structural unit 3 comprising clutch and brake and the form-fitting clutch 4 there may be provided a gear which reduces the mass inertia to be braked to the power of 2 of the stepping down of the gear, although this requires acceptance of a higher speed of the motor.

* C L M S *

THIS SHEET HAS BEEN REPLACED

Claims:

1. A device for overload protection and for braking a driven machine part, in particular a tool driven by way of a cam gear (9 - 11) in a punching and/or bending machine,

having a drive shaft (1) which is driven by a motor (2) and on which there is arranged an overload clutch (4),

characterized in that a braking device (3) is provided which acts on the drive shaft (1) upstream of the overload clutch (4), and in that downstream of the overload clutch (4) there is provided a freewheel (6) which blocks when the drive shaft (1) is braked.

2. A device according to Claim 1, characterized in that the motor is an electric servomotor which also fulfils the function of the braking device.

3. A device according to Claim 1 or 2, characterized in that to trigger the brake (3) a sensor (22) is provided which responds to an overload occurring in the drive train leading from the motor (2) to the driven machine part.

4. A device according to Claim 1, characterized in that the overload clutch (4) has a drive part (4a) and an output part (4b), and in that the sensor (22) responds to a relative movement between the drive part and the output part (4a; 4b) of the overload clutch (4).

5. A device according to one of the preceding claims, characterized in that between the output part (4b) and the driven machine part to be braked in the event of overload there is provided a step-down gear.

6. A device according to Claim 1, characterized in that a clutch/brake combination is arranged between the motor (2) and the overload clutch (4).

This Sheet Has Been Replaced

* C L M S *

THIS SHEET HAS BEEN
REPLACED

7. A device according to one of the preceding claims, characterized in that a gear is arranged between the overload clutch (4) and the braking device (3).

8. A device according to one of the preceding claims, characterized in that the overload clutch (4) is a form-fitting clutch which disengages when a torque threshold is exceeded, this form-fitting clutch having a part which is torsionally rigid with respect to the drive shaft (1) (drive part 4a) and a disengaging part which is arranged rotatably on the drive shaft (1) (output part 4b).

9. A device according to Claim 8, characterized in that the drive part (4a) and the output part (4b) of the overload clutch (4) are tensioned towards one another by a spring having a degressive characteristic curve.

10. A device according to one of the preceding claims, characterized in that the freewheel (6) connects a first ring (6b) connected torsionally rigidly to the drive shaft (1) and a second ring (6a) connected torsionally rigidly to the output part (4b) of the form-fitting clutch (4).

11. A device according to one of the preceding claims, characterized in that to trigger the braking device (3) a possibly further sensor is provided which responds to a disruption in the region of the driven machine part, in particular to an incorrect position of a workpiece to be machined.

12. A device according to one of the preceding claims, characterized in that the braking device (3) is arranged in the drive train in the area of least reduced mass inertia.

This Sheet Has Been Replaced

THIS SHEET HAS BEEN
REPLACED

Abstract:

The device for overload protection and for braking a machine part driven by a motor (2), in particular a tool driven by way of a cam gear in a punching and/or bending machine, contains in the drive train from the motor (2) to the machine part, behind one another on a drive shaft (1), a brake (3), an overload clutch (4) which disengages in the event of a torque threshold being exceeded, and a freewheel (6) which blocks when the drive shaft (1) is blocked in the drive direction.

(Figure 1)

This Sheet Has Been Replaced



THIS SHEET HAS BEEN
REPLACED

Fig.1

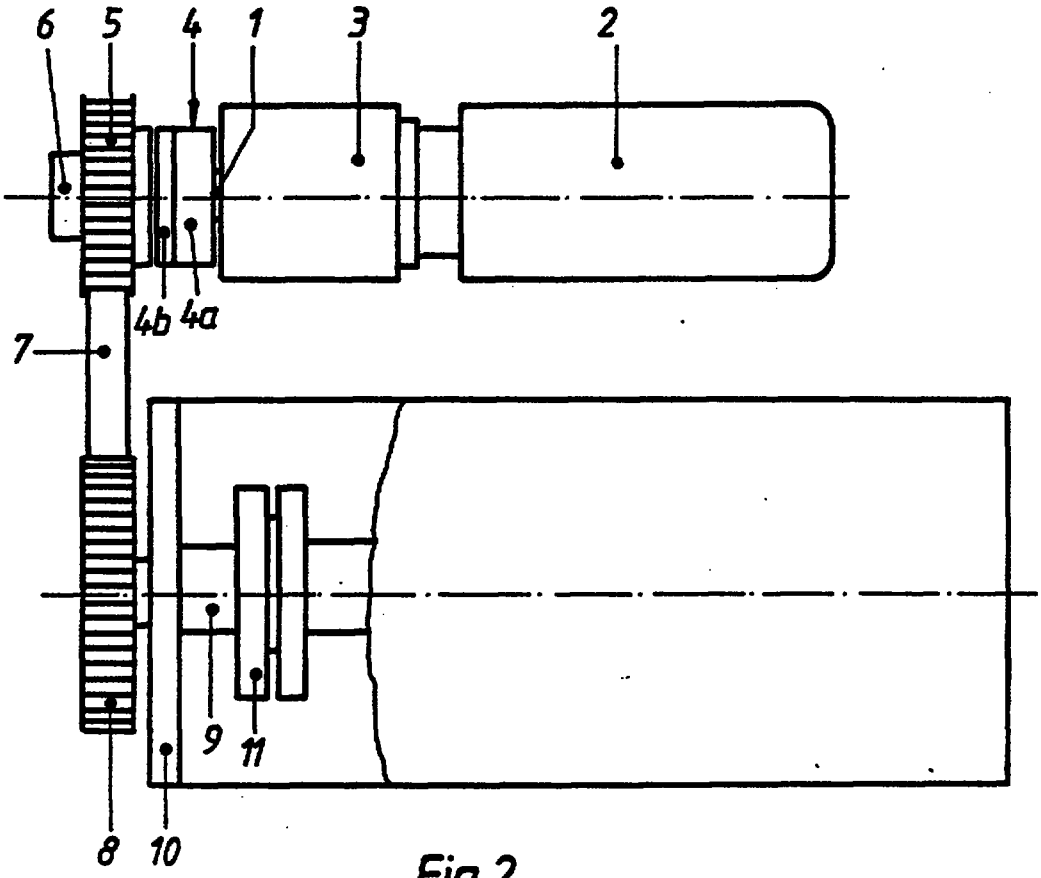

Fig.2

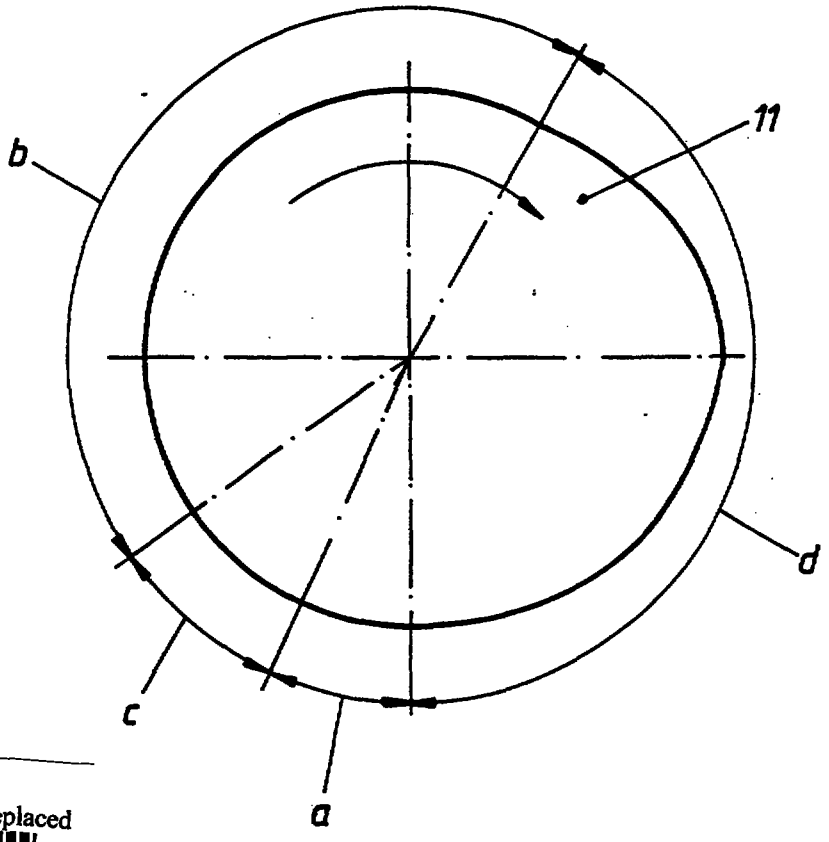

This Sheet Has Been Replaced

THIS SHEET HAS BEEN
REPLACED

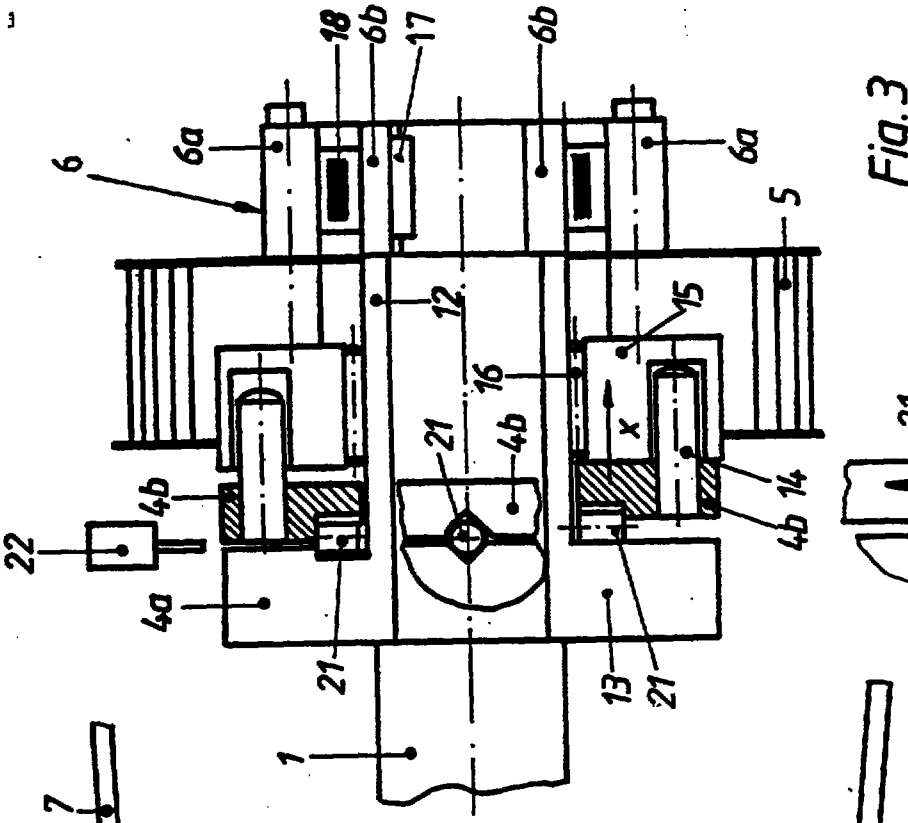

Fig. 3

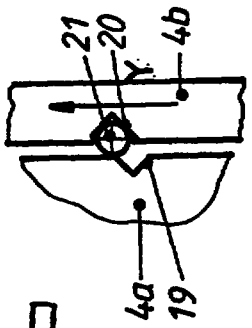

Fig. 4

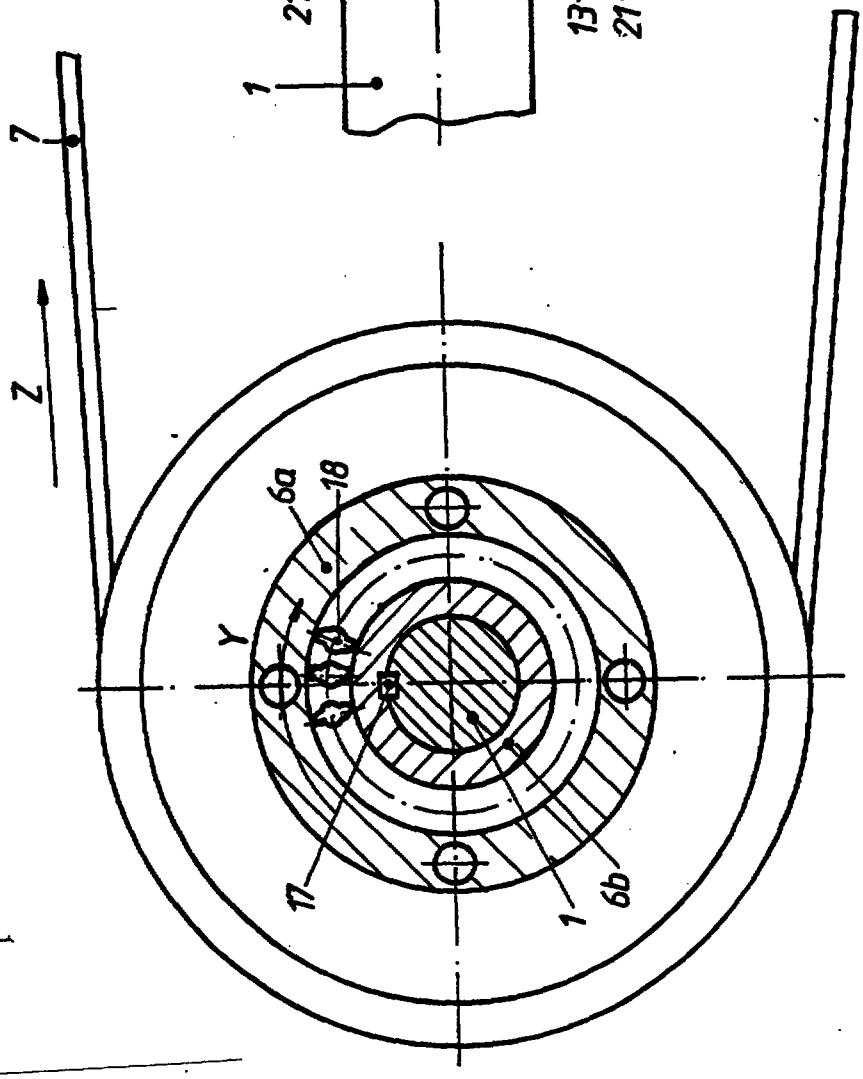

Fig. 5

This Sheet Has Been Replaced

Fig. 6

THIS SHEET HAS BEEN
REPLACED

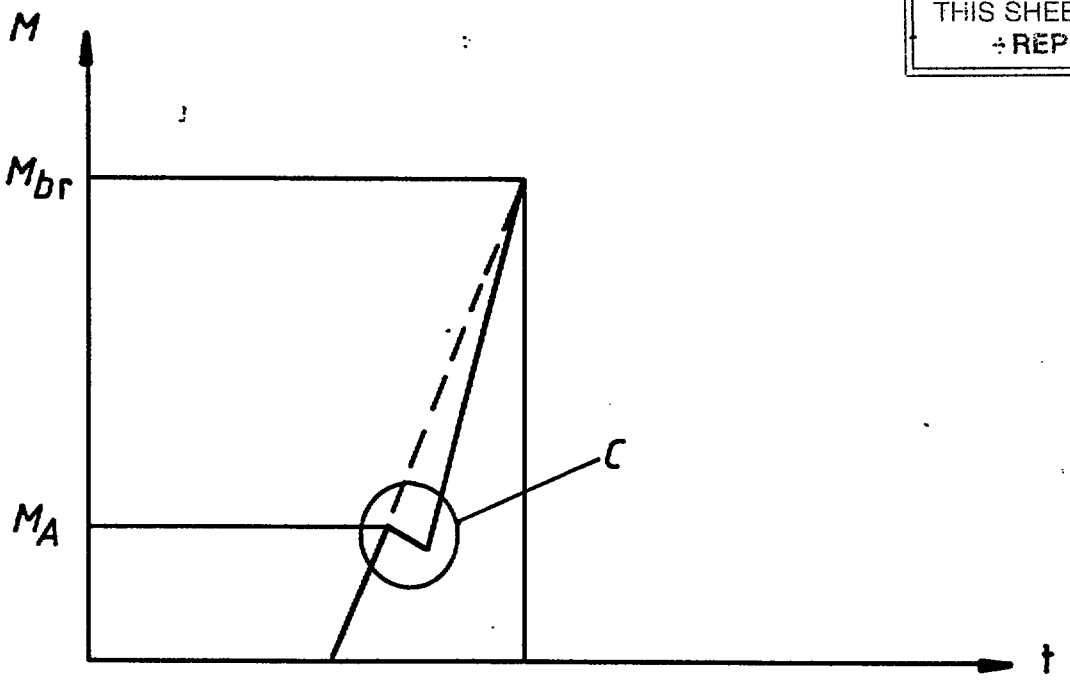

Fig.7

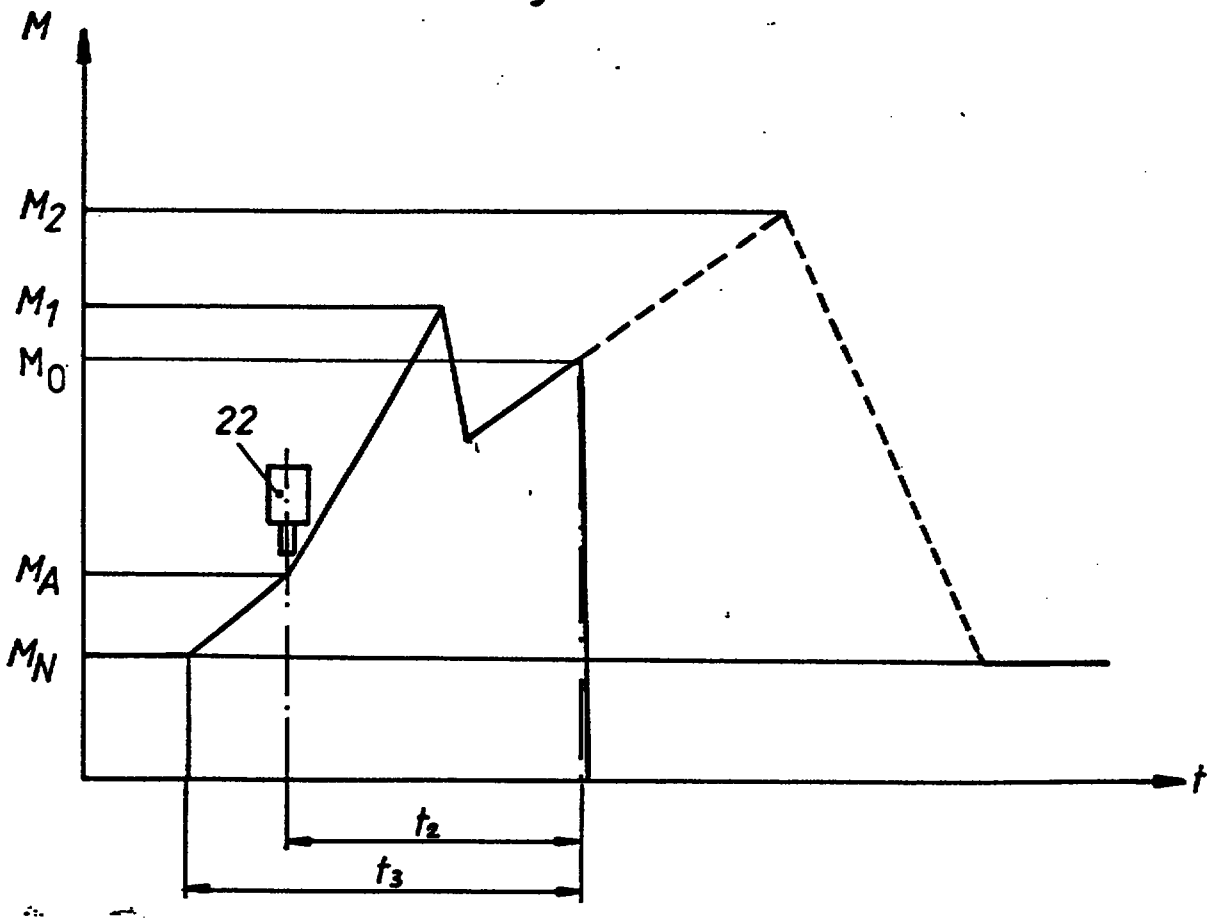

This Sheet Has Been Replaced

REPLACEMENT SHEET
Date : 18 DEC 1996

Device for overload protection and braking of a machine part driven by a motor

The invention relates to a braking device having the features stated in the preamble of Claim 1.

One problem with high-speed punching and bending machines consists in preventing or limiting, as far as possible, damage to the tool in the event of the tool being subjected to an excessive load. For this, it is known to use an overload clutch which, if a predetermined load (torque) is exceeded, separates off the drive train from the motor to the tool or, as in the case of a slip clutch, limits the torque transmitted by the drive shaft. As a result of the momentum of the masses located downstream of the overload clutch, they continue to move when the overload clutch responds, even if it completely releases the masses located downstream thereof in the drive train from the motor. The object therefore remains to brake masses which continue to move as quickly as possible before they can cause relatively severe damage. If a brake is arranged between the motor and the overload clutch, then as a result of such a brake the motor but not the section of the drive train disengaged by the overload clutch as far as the tool can be braked and stopped. If, one the other hand, the brake is arranged downstream of the overload clutch, then with its aid the tool can be braked to a standstill and damage avoided, provided the brake acts quickly enough. Unfortunately, the masses which are to be braked in the drive train downstream of the overload clutch (tools and gears) are generally greater than the masses located in the section of the drive train lying upstream of the overload clutch. A brake lying in the drive train downstream of the overload clutch therefore has to be of correspondingly strong design, which is unfavourable for the braking period. The braking period is composed of an excitation period, characteristic of the construction of the respective brake, and the period of purely braking until the movement energy is consumed. Pneumatic and hydraulic brakes necessitate longer excitation periods to control the valves and build up the necessary pressure in the braking

0-383038

REPLACEMENT SHEET
Date : 18 DEC 1996

device than do electromagnetic brakes, but can apply large braking moments. For electromagnetic brakes, rapid-response devices which enable the excitation period of the braking coil to be minimal but have a longer braking period are known. A short braking period is significant in punching and bending machines, in particular machines for trimming and shaping the pins of integrated circuits (ICs) in which the tool is driven by way of a cam gear, in other words the forward and backward movement of the tool is determined by a roller which rolls on the cam surface of a rotating cam disc. One revolution of the cam disc in this case corresponds to one work cycle of the machine, during which the tool is positioned, the position checked, the tool advanced to machine the workpiece (working stroke) and retracted again (return stroke) and the workpiece is moved on or removed. Experience has shown that to control the tool movement approximately half a revolution of the cam disc is needed. For the workpiece transporting, the workpiece positioning, the checking measurement as to whether the workpiece position is correct and for any stopping of the machine if the workpiece position is incorrect, there is therefore only approximately half a revolution of the cam disc available. For this reason, a lengthening or shortening of the brake angle has an effect of a factor of up to 2 on the cycle time of the machine, that is to say lengthening the braking period brings about a considerable lengthening of the cycle time. In order to obtain high-speed machines it is therefore crucial to be able to stop the tool very rapidly if necessary in order to be able to prevent destruction of the tool in the event of a wrongly positioned workpiece.

Hitherto, efforts have been made to obviate these problems in that the effectiveness of the brake arranged between the overload clutch and the area to be protected (tool) has been increased and its response time reduced, and the brake has been arranged as close as possible to the area to be protected at the end of the drive train in order to reduce a reduction in the maximum moment occurring, produced by the released mass inertia. These, however, are subject to certain limits, especially since high

REPLACEMENT SHEET
Date : 18 DEC 1996

braking moments are required, resulting in turn in relatively large braking units with high mass inertia of the braking device itself.

The object of the invention is to provide a device for braking a motor-driven machine part by means of which particularly rapid stopping of the driven machine part is possible, both on deliberate braking and in the event of disruption, and furthermore to limit the maximum moment occurring in the event of overload and thus the maximum load peak acting on the tools.

This object is achieved by a device having the features specified in Claim 1. Advantageous embodiments of the invention are the subject-matter of the subclaims.

In accordance with the invention there is provided in the drive train between the motor and the driven machine part a combination of a brake, an overload clutch and a freewheel which runs freely during driving of the machine part but which blocks on braking of the driven machine part. In this arrangement, the brake is located in the drive train upstream of the overload clutch and the freewheel is located downstream of the overload clutch.

If the brake is triggered deliberately or by a sensor which for example reports that a workpiece on which the driven machine part (tool) is to act is not positioned correctly, then first of all the momentum of all the moving masses acts on the brake and the braking procedure means that the torque threshold at which the overload clutch responds is reached very rapidly. From this point on, for a brief period until the freewheel blocks, the brake does not need to brake the masses located downstream of the overload clutch but only a relatively small mass, so that the brake very rapidly comes to a standstill. However, the response of the overload clutch does not result in the released machine part being able to continue to move freely, since the freewheel now comes into effect automatically and after passing through its clamping angle, which should be small, blocks and takes up the

REPLACEMENT SHEET
Date 18 DEC 1996

remaining momentum of the driven machine part which is now to be braked (tool) and introduces it into the brake which, because it is located in between, in practice abruptly consumes the energy; the stopping moment of the brake is large enough for the drive shaft not to start to move again. Here, the blocking direction of the freewheel is the same as the driving direction.

If the brake is not triggered deliberately, but rather there is an excessive load in the drive train during which the torque threshold of the overload clutch is exceeded, the latter responds; this can be used in accordance with the invention to trigger the braking device. The braking device is capable of stopping the drive shaft very rapidly, because the freewheel does not block at first and thus at first it is not the momentum of the moving masses downstream of the freewheel but only the momentum of the moving masses upstream of the freewheel which must be taken up and braked. Thus, the brake may be relatively small, with a small braking action developed, and this additionally promotes a short braking period. The mass to be braked by the brake during this phase is particularly small if a further clutch is provided between the brake and the motor in order to decouple the motor, since in this case the brake does not have to brake the momentum mass of the motor as well when the overload clutch responds. Preferably, this further clutch is provided in the form of a clutch/brake combination, in other words as a structural unit comprising a clutch and a brake, since this permits the possibility of masses to be minimally braked as a result of the compact construction. Because the mass to be braked by the brake is small, it comes to a standstill rapidly. Clamping of the freewheel thus also takes places very rapidly. The blocking freewheel takes up the remaining momentum of the masses in the drive train downstream of the overload clutch (on the tool side) in the manner of a buffer stop and introduces the energy into the already stationary brake, whereof the stopping moment is so great that the drive shaft does not start to move again.

REPLACEMENT SHEET
Date 18 DEC 1996

The braking device in accordance with the invention is particularly suitable for high-speed punching and bending machines, in particular such machines whereof the tools are driven mechanically by cam gears and in which the moving masses and the braking moments required to stop them are not too great.

If a step-down gear is additionally provided between the output part of the overload clutch and the machine part to be braked or a cam gear located in between, it has the advantage that the clamping angle of the freewheel which leads to stoppage of the machine part is correspondingly reduced by the stepping down of the step-down gear on the side of the machine part, leading to a very small brake angle of the cam disc. Furthermore, the mass inertia, which is to be braked, of the cam gear is reduced to a power of 2 of the stepping down to the overload clutch and the brake. For the same reason, in an advantageous embodiment of the invention, a gear may also be provided between the overload clutch and the brake.

In order to trigger the braking procedure during the response of the overload clutch in the event of an overload, a sensor is preferably provided which monitors the relative position of the two halves of the overload clutch and emits a brake signal to the braking device as soon as the beginning of relative movement between the halves of the overload clutch is observed. This allows the overload to be recognized with virtually no delay and without a substantial increase in the moment beyond the set response moment of the overload clutch, and rapid braking to be initiated.

A suitable sensor is primarily a light barrier by means of which changes in position which are only fractions of a millimetre may be observed.

However, it is also possible to use a torque sensor lying somewhere within the drive train to trigger the braking procedure in the event of overload, or a power sensor in the driven machine

REPLACEMENT SHEET
Date : 18 DEC 1996

part.

An electromagnetic brake may be used as the brake, the electromagnet thereof being supplied with a high current for a short period when the brake is triggered. When a brake/clutch combination is used, the drive motor is also decoupled. Then it is not necessary to brake the motor.

An advantageous alternative consists in using as the motor for driving the machine part which is where appropriate to be braked a servomotor which may be controlled directly and therefore may also be stopped very quickly; such a servomotor may not only take on the function of driving but also of braking, so that a special brake is no longer required. Such a device is the subject-matter of Claim 2.

A particularly suitable overload clutch is a form-fitting clutch which disengages in the event of a torque threshold being exceeded, and which has a part which is torsionally rigid with respect to the drive shaft (drive part) and a disengaging part which is arranged rotatably on the drive shaft (output part). A form-fitting clutch of this type disengages when a predetermined torque threshold is reached and releases the remaining energy in the drive train downstream of the form-fitting clutch, this remaining energy being taken up by the blocking freewheel in the manner described above and being introduced into the brake, which in the meantime has come to a standstill. A form-fitting clutch of this type responds very rapidly. Its response threshold is conventionally determined by the tension of a spring by means of which the two clutch halves are pressed against one another. Preferably, a spring with a degressive characteristic curve is used in the form-fitting clutch. This means that the torque which may be transmitted by the clutch is reduced to a very small residual moment from the point at which the response begins. The use of a spring with a degressive characteristic curve contributes to the rapid response of the form-fitting clutch.

REPLACEMENT SHEET
Date : 18 DEC 1996

Slip clutches which are conventionally used as overload clutches are less suitable since they respond more slowly and thus transmit a higher residual moment.

In a freewheel there are conventionally two annular faces which are movable relative to one another and between which are arranged clamping bodies which permit free running in one direction of rotation and clamp when the direction of rotation is reversed. One of these annular faces could be constructed directly on the drive shaft, and preferably the annular faces are located on two rings, of which one is rigidly connected to the drive shaft and the other is rigidly connected to the output part of the overload clutch. The direction of blocking of the freewheel is the same as the drive direction.

The enclosed schematic drawings show an embodiment of the invention.

Figure 1 shows a view of a drive unit of a machine,

Figure 2 shows a side view of a cam disc of the drive unit shown in Figure 1,

Figure 3 shows a detail of a form-fitting clutch in combination with a sprag clutch as a component of the drive unit shown in Figure 1, partly in section,

Figure 4 shows a detail of the form-fitting clutch of Figure 3 in the disengaged position,

Figure 5 shows the cross-section V-V through the sprag clutch, in accordance with Figure 3,

Figure 6 shows a torque/time characteristic curve in a deliberately triggered braking procedure, and

Figure 7 shows a torque/time characteristic curve in the event

REPLACEMENT SHEET
Date :18 DEC 1996

of overload.

Arranged in the drive unit on a common drive shaft 1 behind one another are an electric motor 2, a structural unit 3 comprising an electromagnetic brake and a clutch for decoupling the motor 2, as the overload clutch a form-fitting clutch 4 which disengages when a torque threshold is exceeded, a toothed wheel 5 and a freewheel 6 (a one-way clutch with a sprag-type blocking arrangement). The driving toothed wheel 5 drives a further toothed wheel 8 by means of a toothed belt 7, which wheel is seated on a driven shaft 9 held in a gear casing 10 and carrying a plurality of cam discs 11 in the gear casing.

The form-fitting clutch 4 has a drive part 4a, comprising a hub 12 and a flange 13, and is axially non-displaceable and torsionally rigidly connected to the shaft 1. The form-fitting clutch 4 further has an output part 4b which encases the hub 12 in an axially displaceable manner and is rotatable with respect thereto. For this purpose, a plurality of axially parallel pins 14 are disposed in the output part 4b and extend into bores 15 of a bearing ring 15 which is rotatably held on the hub 12 by means of rollers 16. The bearing ring 15 is torsionally rigidly connected to the toothed wheel 5 and this is in turn torsionally rigidly connected to the outer ring 6a of the freewheel, while the inner ring 6b of the freewheel is torsionally rigidly connected to the drive shaft 1 by a wedge 17. Between the outer ring 6a and the inner ring 6b clamping bodies 18 are provided in the freewheel and arranged in such a way that the freewheel runs freely while the toothed wheel 5 is driven but blocks if the shaft 1 is braked and the form-fitting clutch 4 disengages.

In the mutually facing surfaces of the drive part 4a and the output part 4b of the form-fitting clutch, there are provided notches 19 and 20 opposite one another in pairs and extending radially and serving to receive rollers 21 which keep the drive part and the output part at a small distance from one another. By means of springs (not shown) acting between the output part

REPLACEMENT SHEET
Date : 18 DEC 1996

4b and the bearing ring 15, the output part 4b is permanently pressed against the drive part 4a. The spring force, the diameter of the rollers 21 and the shape of the notches 19 and 20 determine a torque threshold beyond which the drive part 4a and the output part 4b begin to rotate in relation to one another, with the output part 4b moving away from the drive part 4a and the pins 15 moving deeper into the bearing ring 15 (see also Figures 3 and 4). So that this disengaging movement of the form-fitting clutch can be observed, a sensor 22, in particular a light barrier or the like, is provided and responds sensitively to the relative movement of the output part 4b with respect to the drive part 4a and thereupon conveys by way of a very rapid electrical connection a signal to the brake 3, which triggers the latter.

In a properly working machine, the motor 2 drives the drive shaft 1 and, with said shaft, the drive part 4a of the form-fitting clutch, which is engaged and entrains the toothed wheel 5. If the brake/clutch combination 3 is triggered without an overload occurring in the drive unit, whether deliberately or by a sensor which establishes that a workpiece in the working area of a driven tool is not positioned correctly, then with the motor 2 decoupled first the drive shaft 1 is braked and with it all the masses also associated therewith from the form-fitting clutch 4 by way of the gear 9, 11 to the tool, including the drive part 4a of the form-fitting clutch and the inner ring 6b of the sprag clutch 6. The torque acting on the brake 3 and the form-fitting clutch 4 rises rapidly until the torque threshold M_A is reached, at which point the form-fitting clutch 4 is disengaged (see Figure 6). During the disengaging movement there is a temporary decline in the torque acting on the brake 3 (area C in Figure 6), because the masses in the drive train are decoupled from the brake 3 downstream of the form-fitting clutch 4, and the drive shaft 1 comes to a standstill. During the disengaging movement, the rollers 21 move out of the notches 19, with the output part 4b turning with respect to the drive part 4a (direction of movement Y in accordance with Figure 4). At the same time the

REPLACEMENT SHEET
Date : 18 DEC 1996

clamping movement of the freewheel 6 begins, because at this point the drive shaft 1 no longer drives the output part 4b and the inner ring 6b, but rather comes to a stop and the toothed wheel 8 and the cam shaft 9 are driven by way of the toothed belt 7 and the toothed wheel 5 drives the outer ring 6a of the freewheel 6 by its momentum until the freewheel blocks, abruptly brakes the momentum and takes up the braking moment occurring as a result, which now rises rapidly until a final value M_{br} is reached and thus the rotational movement of the toothed wheel 5 and the movement of the machine parts driven downstream thereof are stopped rapidly, because the freewheel 6 is stopped by the brake 3, which in the meantime has come to a standstill.

The setting of the form-fitting clutch according to the required drive moments of the driven machine parts (tools) has no influence on the disengaging behaviour of the form-fitting clutch and the maximum clamping angle of the freewheel. The clamping angle of the sprag clutch 6, which is in any case already small, is reduced further according to the step-down ratio of the toothed belt gear. This leads to a very small brake angle (a) at the cam disc 11 (see Figure 2). As almost half of the circumferential angle of the cam disc is needed for the tool movement (section d), and approximately the same circumferential section is needed for advancing or inserting the workpiece, there remains only a relatively small circumferential section (c) for fixing the workpiece and for the checking measurements of its position and also only a very small circumferential section (a) for the braking procedure which has to be triggered in the event that incorrect positioning is established. As lengthening of the braking period affects the cycle time (time for one revolution of the cam disc 11) approximately by a factor of 2, it is advantageous that using the invention means that the circumferential section (a) needed for braking can be kept very small.

If an overload occurs at the driven machine part, for instance in a tool which is driven by the cam discs 11 and may need

REPLACEMENT SHEET
Date : 18 DEC 1996

braking, the freewheel 6 remains unblocked at first to the rear in the freewheel direction and the form-fitting clutch 4 can disengage without obstruction in opposition to the drive direction Z, with the disengaging movement commencing when the torque threshold M_A is reached (Figure 7). A torque maximum M_1 produced during this is released by the form-fitting clutch 4 and the disengaging movement of the form-fitting clutch 4 comes to an end when the torque maximum M_1 is reached. Because the form-fitting clutch is arranged far downstream in the drive train, directly downstream of the brake 3, M_1 is relatively small, so that the load on the area of damage in the tool is correspondingly small. The braking device 3 is located in the area of least reduced mass inertia.

The disengagement of the form-fitting clutch 4 leads to the release of the gear members 5, 7, 8, 9, 11 downstream of the form-fitting clutch, and their kinetic energy still has to be taken up and dissipated. For this purpose, the sensor 22 is provided, and this triggers the brake/clutch combination 3 at the very beginning of the disengaging procedure, when the output part 4b is lifted away. During the disengagement of the form-fitting clutch, the braking device only has to brake very small amounts of mass inertia, namely that of the drive shaft 1, that of the drive part 4a of the form-fitting clutch and that of the inner ring 6b of the freewheel. The remaining amounts of mass inertia of the toothed belt transmission 5, 7 and 8 and the cam gear 9, 11, which are situated downstream of the outer ring 6a of the freewheel in the drive train, are taken up by the freewheel 6 with a slight delay when the shaft 1 is already braked, as soon as the freewheel 6 blocks. For this reason, within an extremely short braking period t2 after the response of the sensor 22, braking of the drive shaft 1 and then blocking of the freewheel 6 occur until the tool is stopped, as a result of which the torque maximum M_2, which would be produced as a result of the rotational energy of the gear members downstream of the freewheel 6 without gripping of the braking device and would result in damage to the tool, is limited to a non-critical maximum M_0 and

REPLACEMENT SHEET
Date :..18 DEC 1996

its period t3 of acting on the area of damage in the tool can be reduced. The tool has comes to a standstill after the period t3.

Between the structural unit 3 comprising clutch and brake and the form-fitting clutch 4 there may be provided a gear which reduces the mass inertia to be braked to the power of 2 of the stepping down of the gear, although this requires acceptance of a higher speed of the motor.

* C L M S *

REPLACEMENT SHEET
Date : 18 DEC 1996

Claims:

1. A device for overload protection and for braking a driven machine part, in particular a tool driven by way of a cam gear (9 - 11) in a punching and/or bending machine,

having a drive shaft (1) which is driven by a motor (2) and on which there is arranged an overload clutch (4),

characterized in that a braking device (3) is provided which acts on the drive shaft (1) upstream of the overload clutch (4), and in that downstream of the overload clutch (4) there is provided a freewheel (6) which blocks when the drive shaft (1) is braked.

2. A device according to Claim 1, characterized in that the motor is an electric servomotor which also fulfils the function of the braking device.

3. A device according to Claim 1 or 2, characterized in that to trigger the brake (3) a sensor (22) is provided which responds to an overload occurring in the drive train leading from the motor (2) to the driven machine part.

4. A device according to Claim 1, characterized in that the overload clutch (4) has a drive part (4a) and an output part (4b), and in that the sensor (22) responds to a relative movement between the drive part and the output part (4a; 4b) of the overload clutch (4).

5. A device according to one of the preceding claims, characterized in that between the output part (4b) and the driven machine part to be braked in the event of overload there is provided a step-down gear.

6. A device according to Claim 1, characterized in that a clutch/brake combination is arranged between the motor (2) and the overload clutch (4).

* C L M S *

REPLACEMENT SHEET
Date : 18 DEC 1996

7. A device according to one of the preceding claims, characterized in that a gear is arranged between the overload clutch (4) and the braking device (3).

8. A device according to one of the preceding claims, characterized in that the overload clutch (4) is a form-fitting clutch which disengages when a torque threshold is exceeded, this form-fitting clutch having a part which is torsionally rigid with respect to the drive shaft (1) (drive part 4a) and a disengaging part which is arranged rotatably on the drive shaft (1) (output part 4b).

9. A device according to Claim 8, characterized in that the drive part (4a) and the output part (4b) of the overload clutch (4) are tensioned towards one another by a spring having a degressive characteristic curve.

10. A device according to one of the preceding claims, characterized in that the freewheel (6) connects a first ring (6b) connected torsionally rigidly to the drive shaft (1) and a second ring (6a) connected torsionally rigidly to the output part (4b) of the form-fitting clutch (4).

11. A device according to one of the preceding claims, characterized in that to trigger the braking device (3) a possibly further sensor is provided which responds to a disruption in the region of the driven machine part, in particular to an incorrect position of a workpiece to be machined.

12. A device according to one of the preceding claims, characterized in that the braking device (3) is arranged in the drive train in the area of least reduced mass inertia.

REPLACEMENT SHEET
Date : 18 DEC 1996

DEVICE FOR OVERLOAD PROTECTION AND BRAKING OF A MACHINE PART DRIVEN BY A MOTOR

Abstract:

The device for overload protection and for braking a machine part driven by a motor (2), in particular a tool driven by way of a cam gear in a punching and/or bending machine, contains in the drive train from the motor (2) to the machine part, behind one another on a drive shaft (1), a brake (3), an overload clutch (4) which disengages in the event of a torque threshold being exceeded, and a freewheel (6) which blocks when the drive shaft (1) is blocked in the drive direction.

(Figure 1)

REPLACEMENT SHEET
Date : 18 DEC 1996

Fig.1

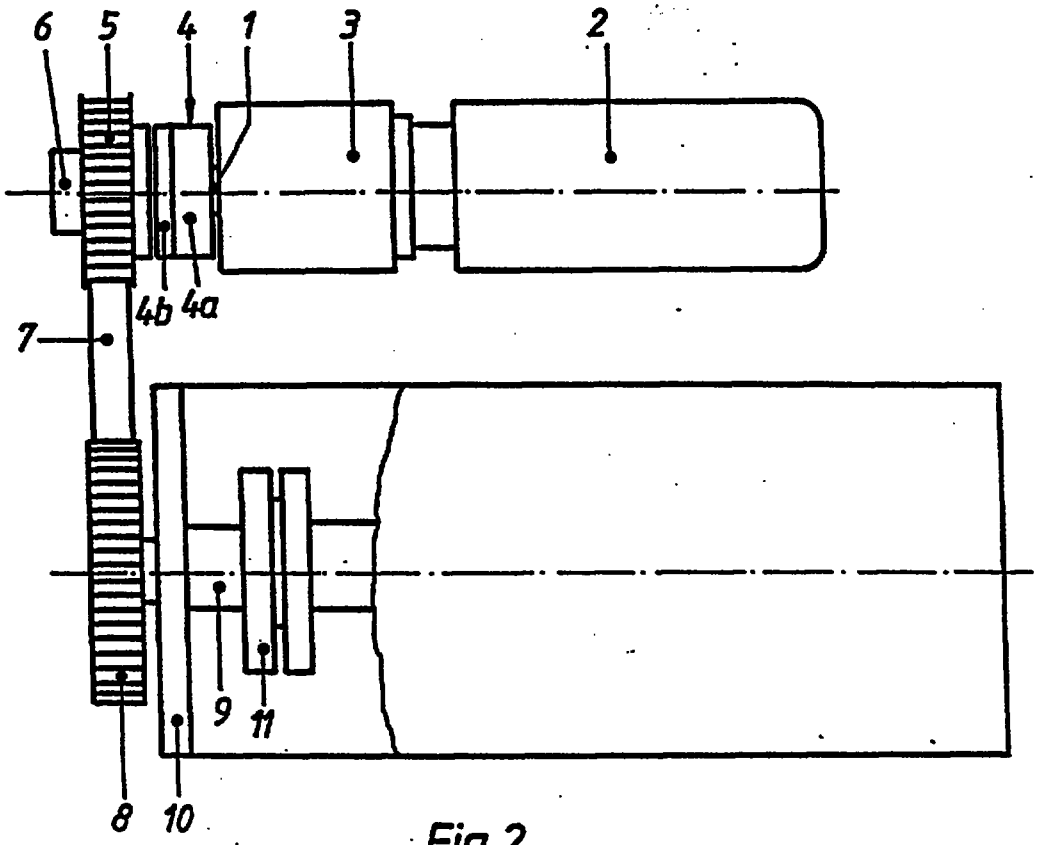

Fig.2

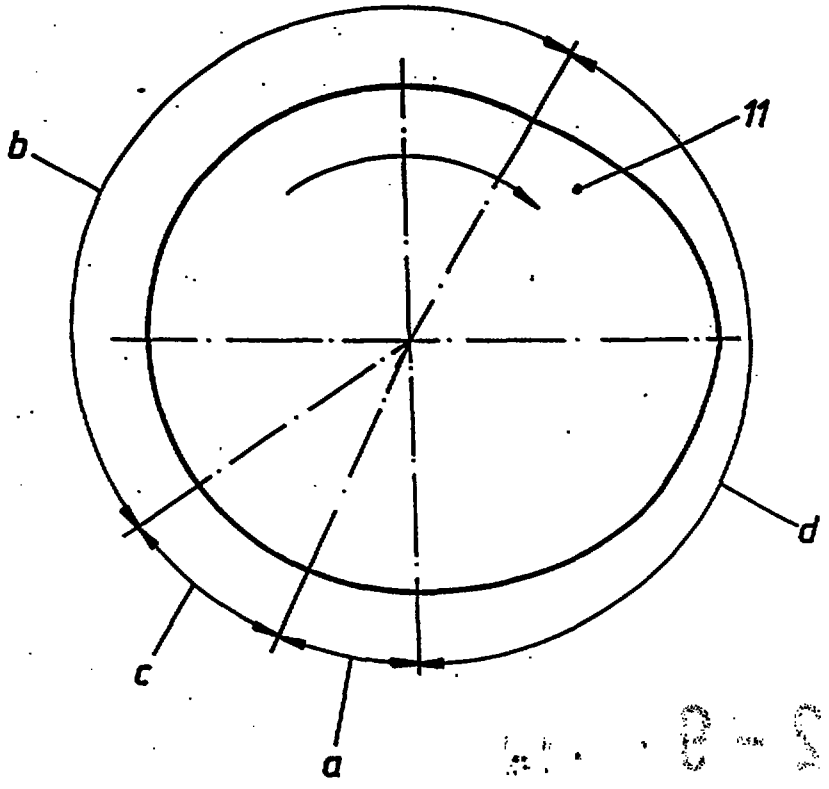

REPLACEMENT SHEET
Date : 18 DEC 1996

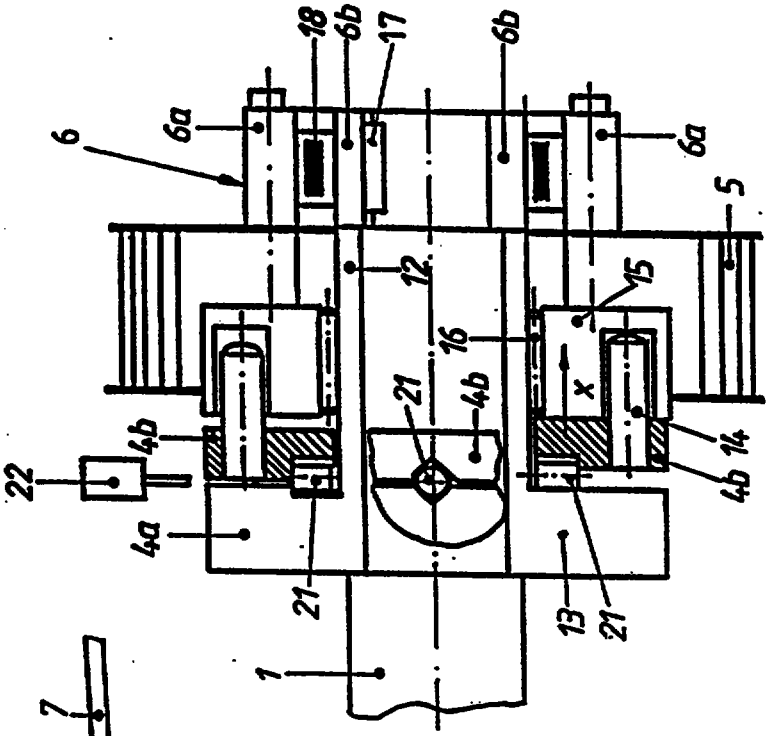

Fig. 3

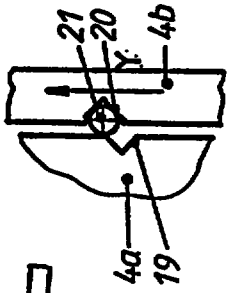

Fig. 4

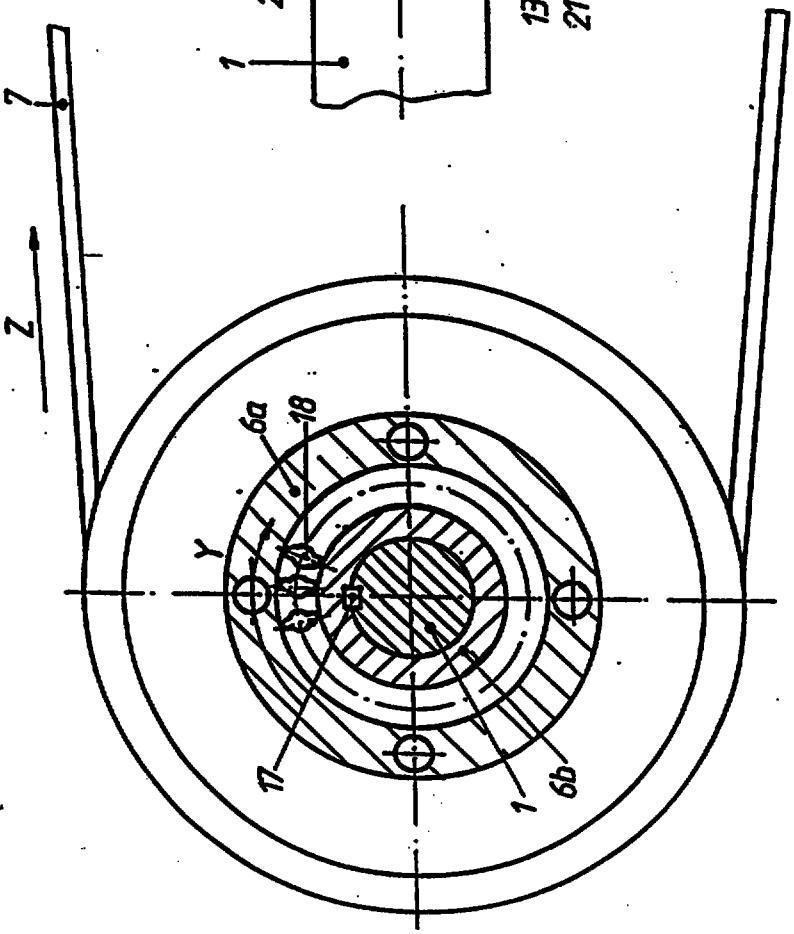

Fig. 5

REPLACEMENT SHEET
Date : 18 DEC 1996

Fig. 6

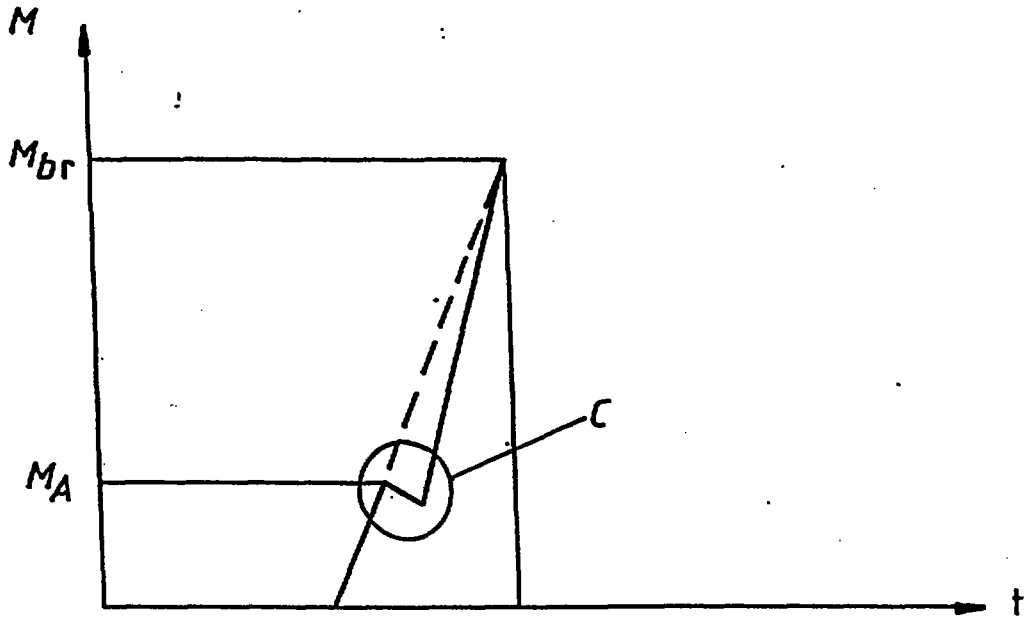

Fig.7

