(12) INTERNATIONAL APPLICATION PUBLISHED UNDER THE PATENT COOPERATION TREATY (PCT)

(19) World Intellectual Property Organization
International Bureau

(43) International Publication Date
7 June 2012 (07.06.2012)

WIPO | PCT

(10) International Publication Number
WO 2012/074408 A2

(51) International Patent Classification:
B63B 59/08 (2006.01)

(21) International Application Number:
PCT/NO2011/000333

(22) International Filing Date:
24 November 2011 (24.11.2011)

(25) Filing Language: English

(26) Publication Language: English

(30) Priority Data:
20101673 29 November 2010 (29.11.2010) NO

(71) Applicant *(for all designated States except US)*: **ENVIRONTEC AS** [NO/NO]; Rugdeveien 12, N-3679 Notodden (NO).

(72) Inventor; and
(75) Inventor/Applicant *(for US only)*: **ANDERSEN, Robert** [NO/NO]; Rugdeveien 12, N-3679 Notodden (NO).

(74) Agents: **ONSAGERS AS** et al.; P.O.Box 6963, St. Olavs plass, N-0130 Oslo (NO).

(81) Designated States *(unless otherwise indicated, for every kind of national protection available)*: AE, AG, AL, AM, AO, AT, AU, AZ, BA, BB, BG, BH, BR, BW, BY, BZ, CA, CH, CL, CN, CO, CR, CU, CZ, DE, DK, DM, DO, DZ, EC, EE, EG, ES, FI, GB, GD, GE, GH, GM, GT, HN, HR, HU, ID, IL, IN, IS, JP, KE, KG, KM, KN, KP, KR, KZ, LA, LC, LK, LR, LS, LT, LU, LY, MA, MD, ME, MG, MK, MN, MW, MX, MY, MZ, NA, NG, NI, NO, NZ, OM, PE, PG, PH, PL, PT, QA, RO, RS, RU, RW, SC, SD, SE, SG, SK, SL, SM, ST, SV, SY, TH, TJ, TM, TN, TR, TT, TZ, UA, UG, US, UZ, VC, VN, ZA, ZM, ZW.

(84) Designated States *(unless otherwise indicated, for every kind of regional protection available)*: ARIPO (BW, GH, GM, KE, LR, LS, MW, MZ, NA, RW, SD, SL, SZ, TZ, UG, ZM, ZW), Eurasian (AM, AZ, BY, KG, KZ, MD, RU, TJ, TM), European (AL, AT, BE, BG, CH, CY, CZ, DE, DK, EE, ES, FI, FR, GB, GR, HR, HU, IE, IS, IT, LT, LU, LV, MC, MK, MT, NL, NO, PL, PT, RO, RS, SE, SI, SK, SM, TR), OAPI (BF, BJ, CF, CG, CI, CM, GA, GN, GQ, GW, ML, MR, NE, SN, TD, TG).

Published:

— *without international search report and to be republished upon receipt of that report (Rule 48.2(g))*

(54) **Title**: A SURFACE-CLEANING DEVICE AND VEHICLE

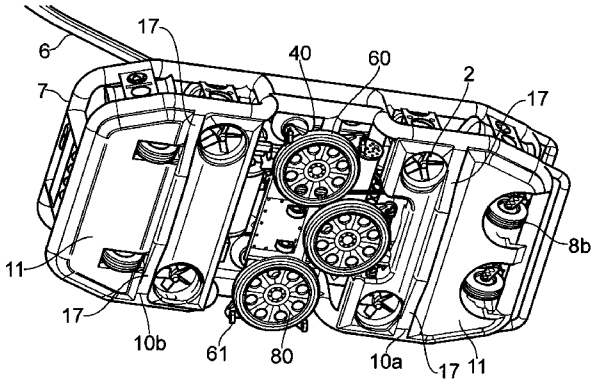

FIG. 4

(57) **Abstract**: A device (60) for cleaning of ship's hulls or other submerged surfaces, comprises a disk member (80) rotatably supported by a spindle (67) and configured for rotation about a rotational axis (r) by drive means (63). The disk member has one side facing the surface and comprises a plurality of nozzles (82) for discharging liquid under pressure against the surface to be cleaned. The disk member (80) also comprises a plurality of through holes (83), spaced at regular intervals and arranged symmetrically with respect to the rotational axis. The disk may also comprise a plurality of ridges (84) arranged at regular intervals on the side facing the surface, and extending radially. An hull-cleaning ROV (1) comprises a pair of first trimming means (10a,b) arranged in a plane which is parallel with the vehicle's x-y plane, and a distance away from the centre of gravity (CG); and a pair of second trimming means (12a,b) arranged in the x-y plane and along the x axis. The trimming means (10a,b, 12a,b) are autonomous in that the trimming means' individual centre of gravity is automatically shifted when the vehicle is accelerating or changes its orientation in the water.

WO 2012/074408 A2