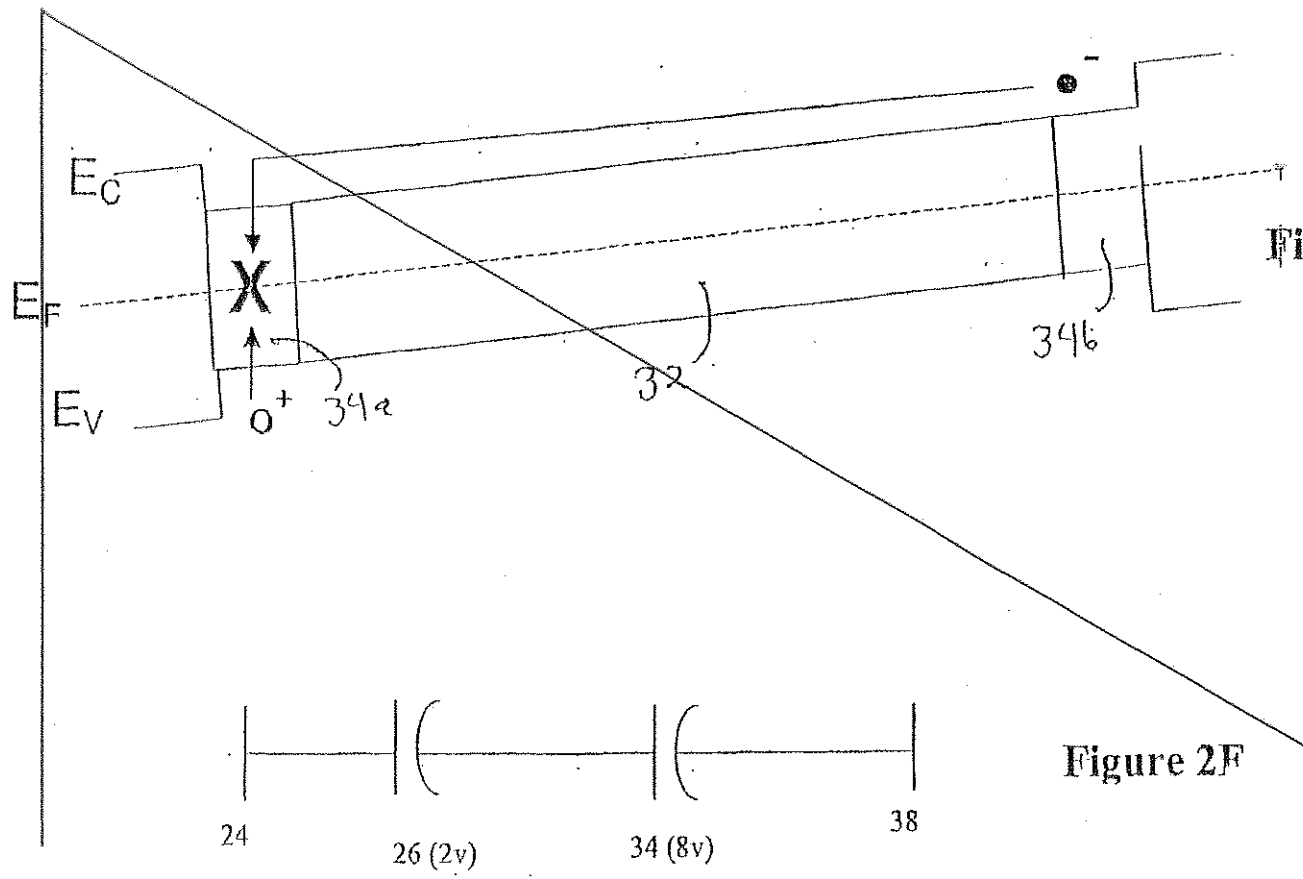


Figure 2E

Figure 2F

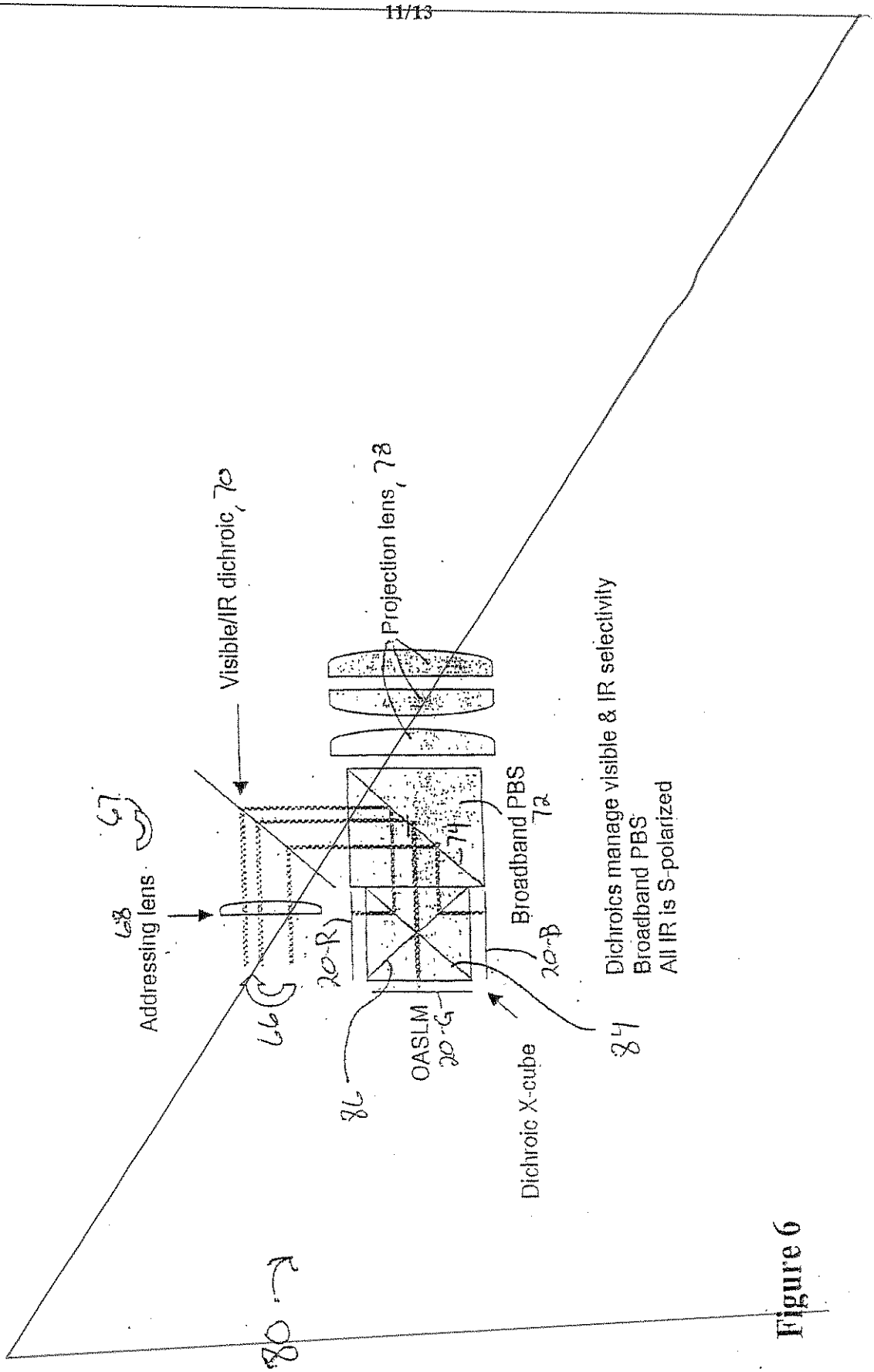
Addressing lens
Visible/IR dichroic, 70
Projection lens, 78
Broadband PBS
72
OASLM
20-G
Dichroic X-cube
Dichroics manage visible & IR selectivity
Broadband PBS
All IR is S-polarized

Figure 6

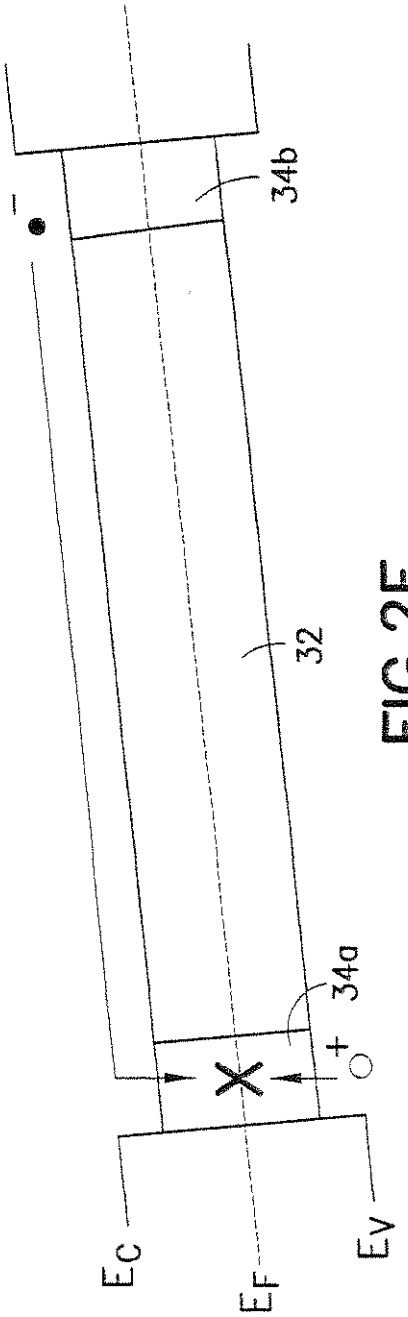


FIG.2E

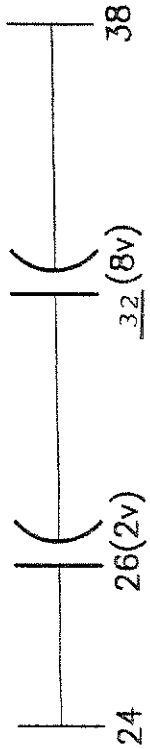


FIG.2F

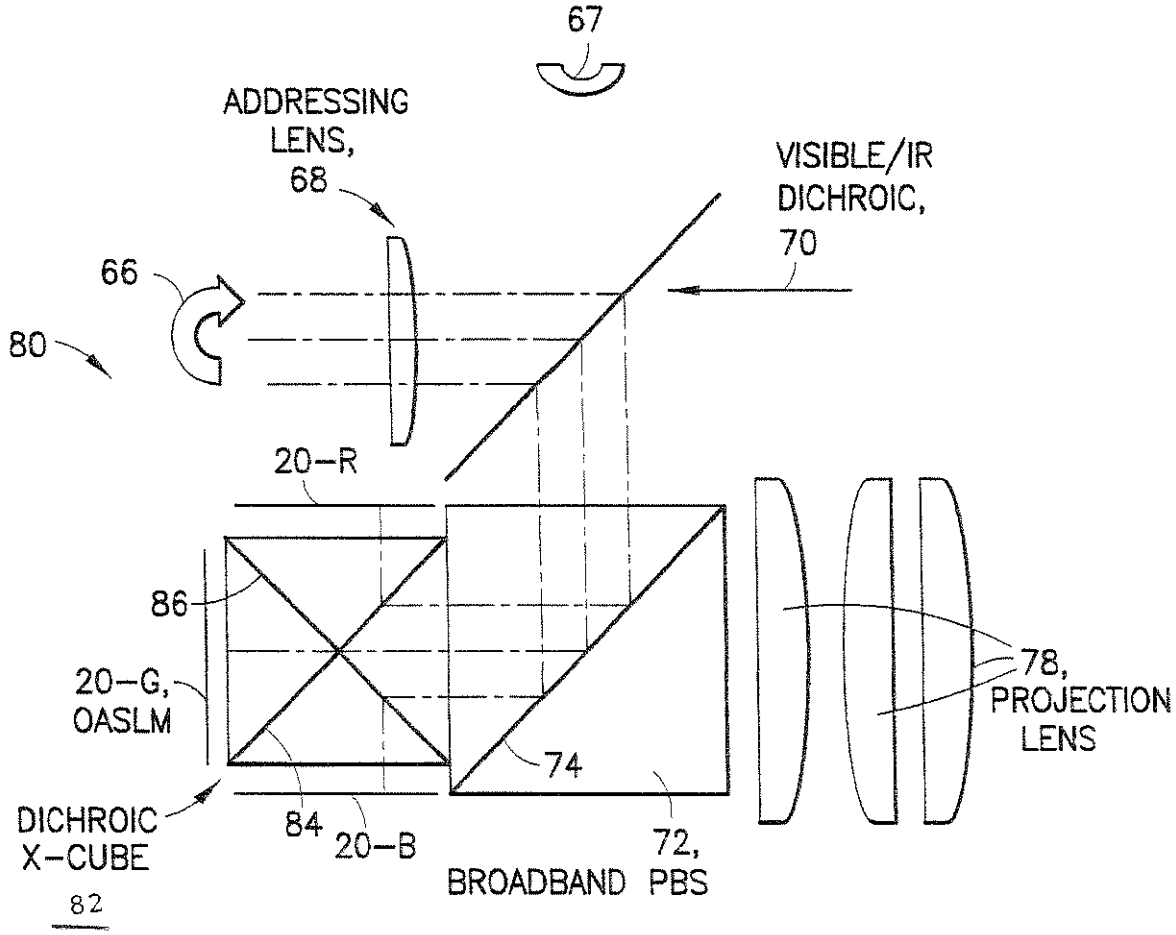


DICHROICS MANAGE
VISIBLE & IR SELECTIVITY
BROADBAND PBS
ALL IR IS
S-POLARIZED

FIG.6