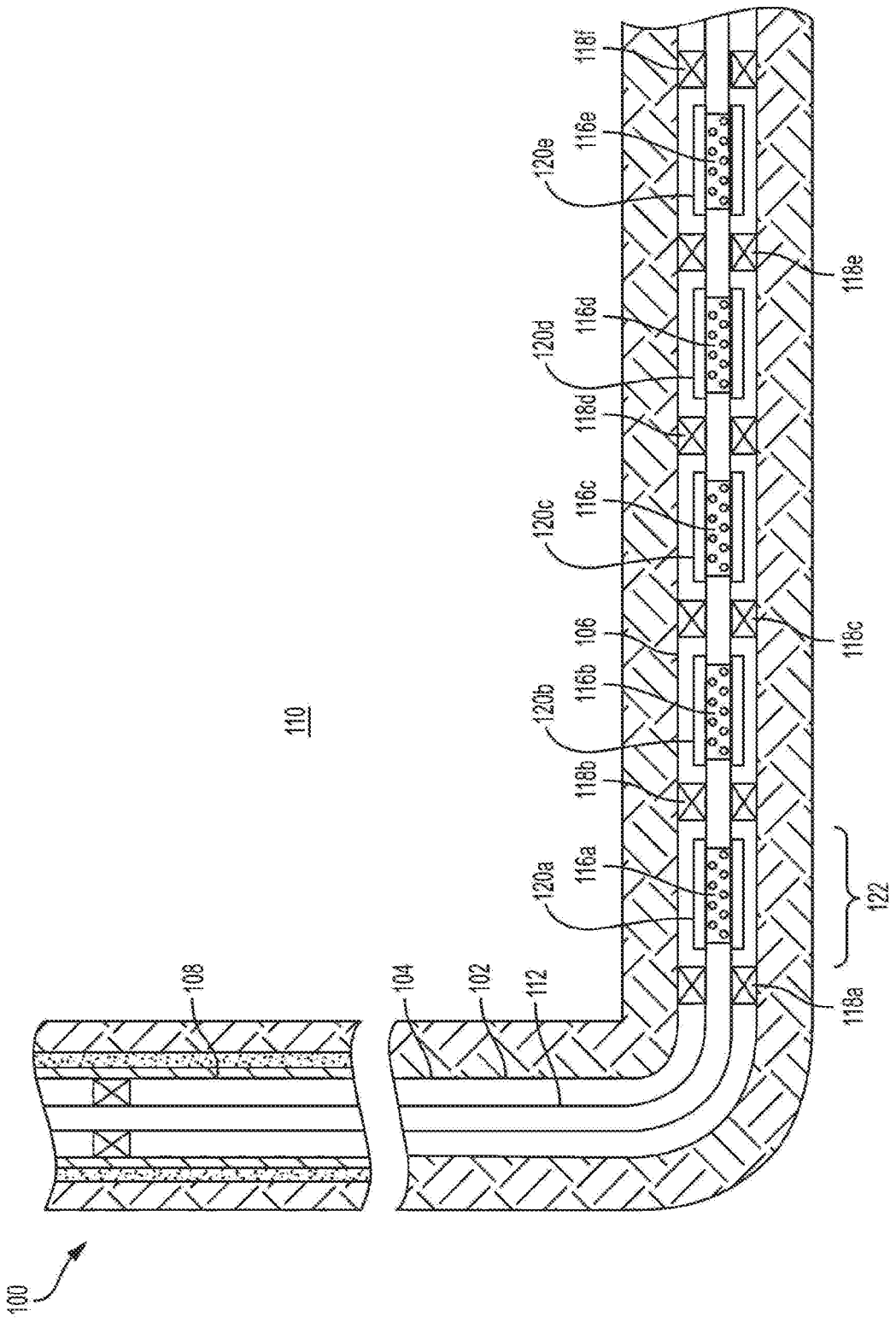
100
108
104
102
112
110
120a
116a
118b
120b
116b
106
120c
116c
118d
120d
116d
118e
120e
116e
118f
118a
122
118c

Fig. 1

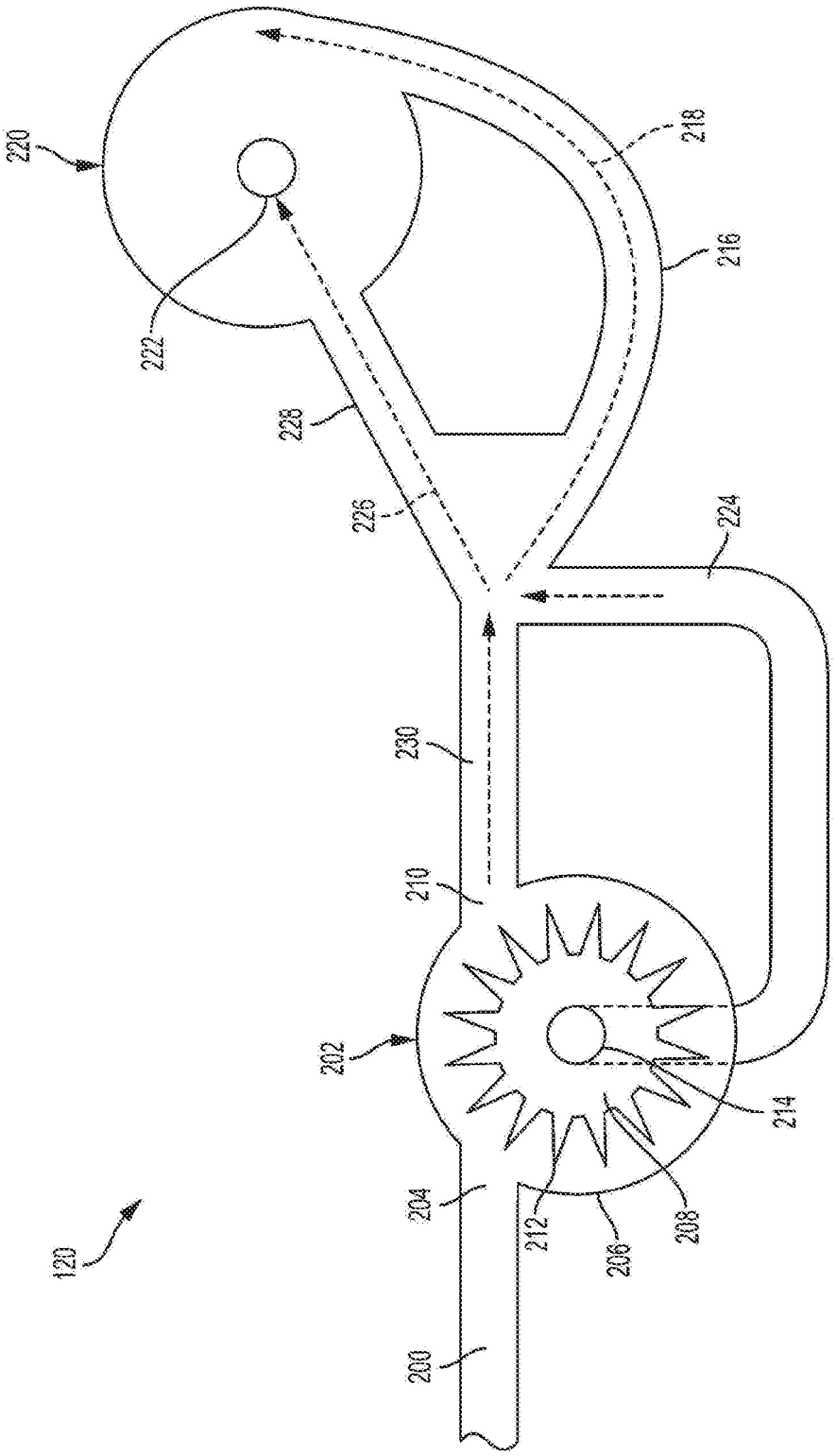
120
200
202
204
206
208
210
212
214
216
218
220
222
224
226
228
230

Fig. 2

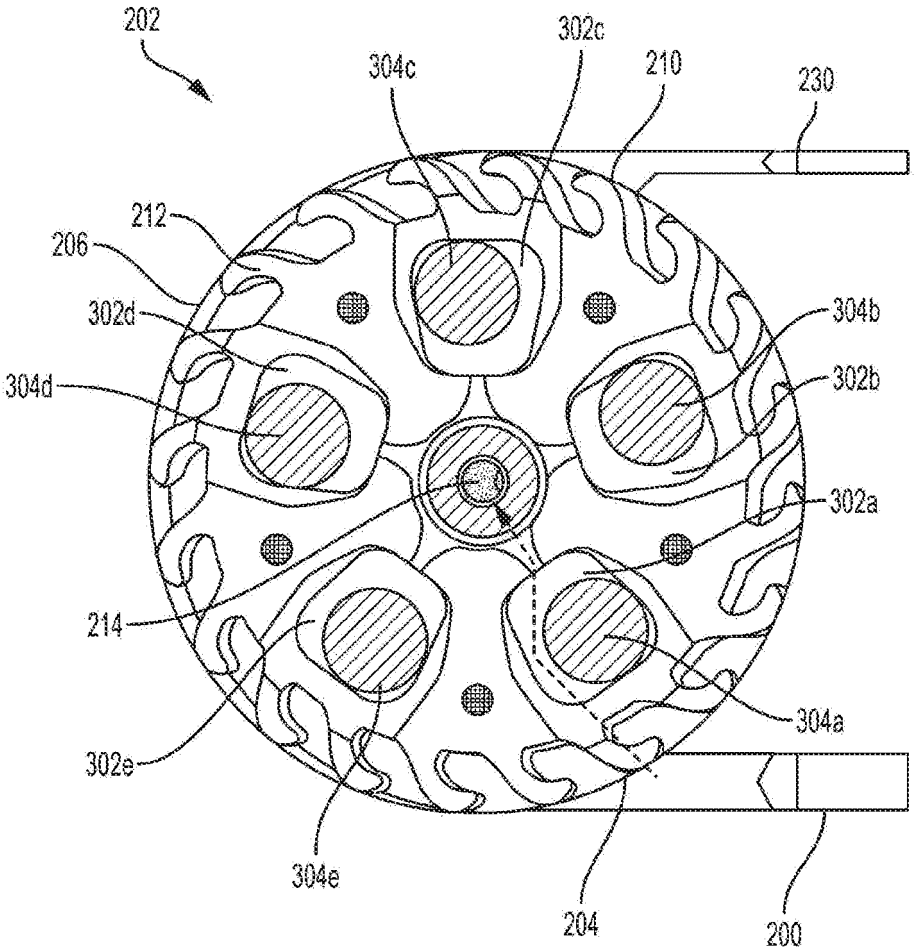
202
304c
302c
210
230
212
206
302d
304d
304b
302b
302a
214
304a
302e
304e
204
200

Fig. 3

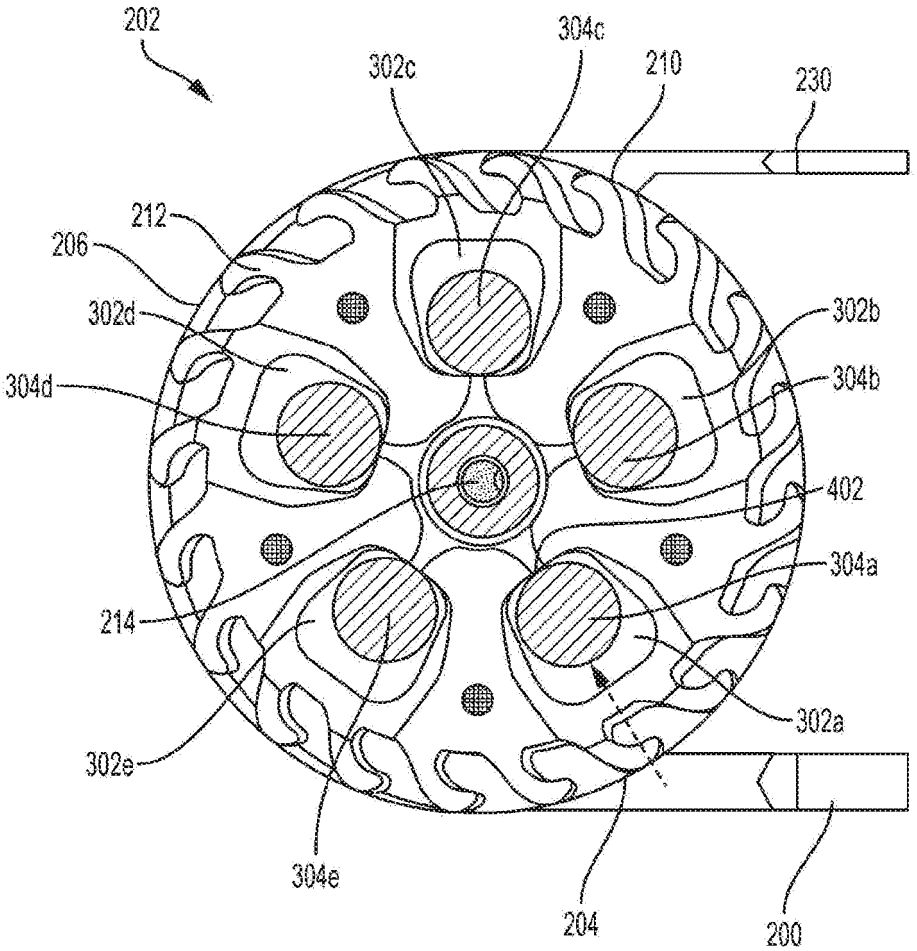
202
304c
302c
210
230
212
206
302d
302b
304d
304b
402
304a
214
302a
302e
304e
204
200

Fig. 4

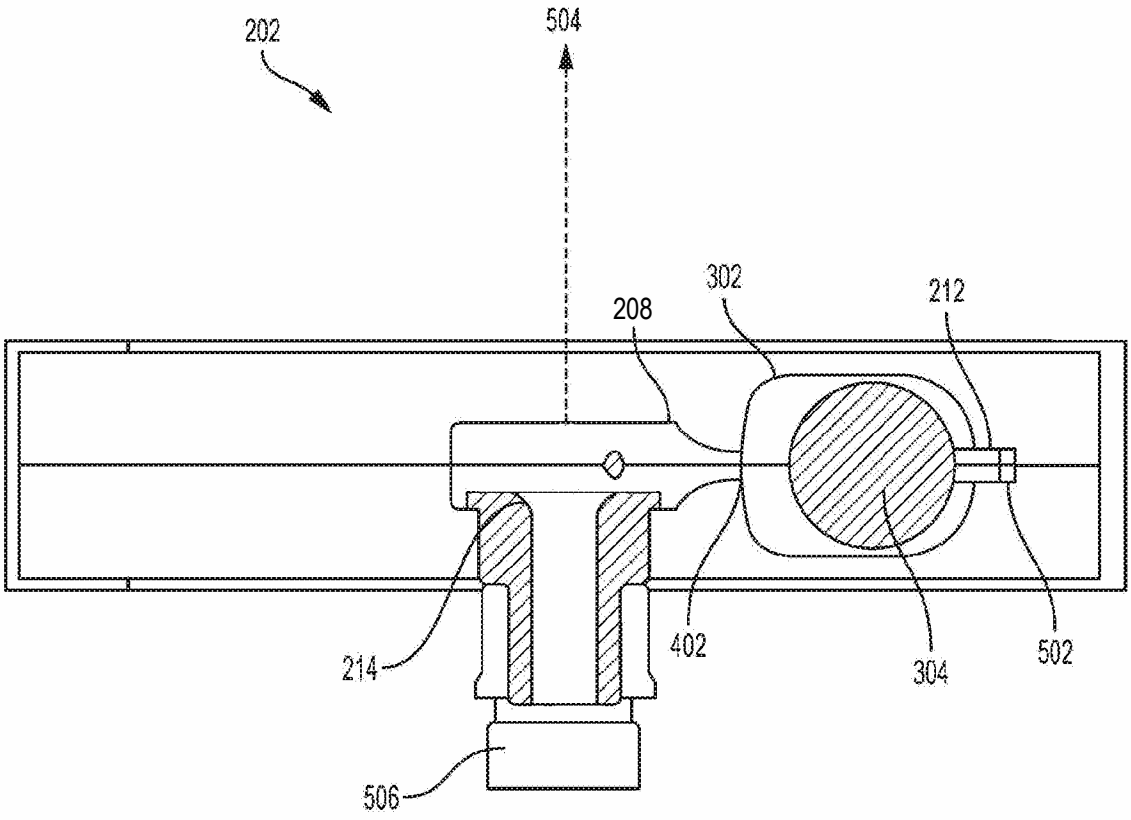

Fig. 5

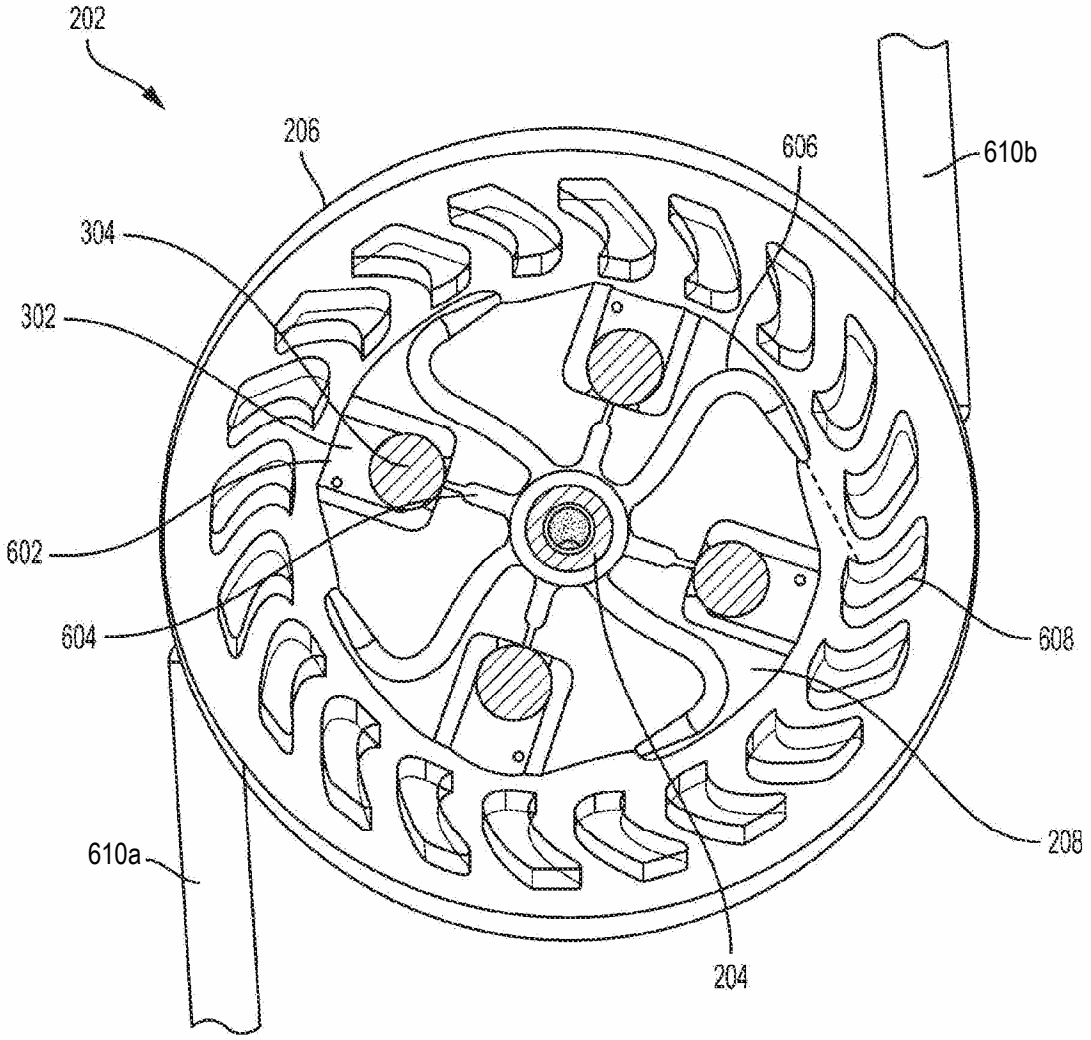

Fig. 6

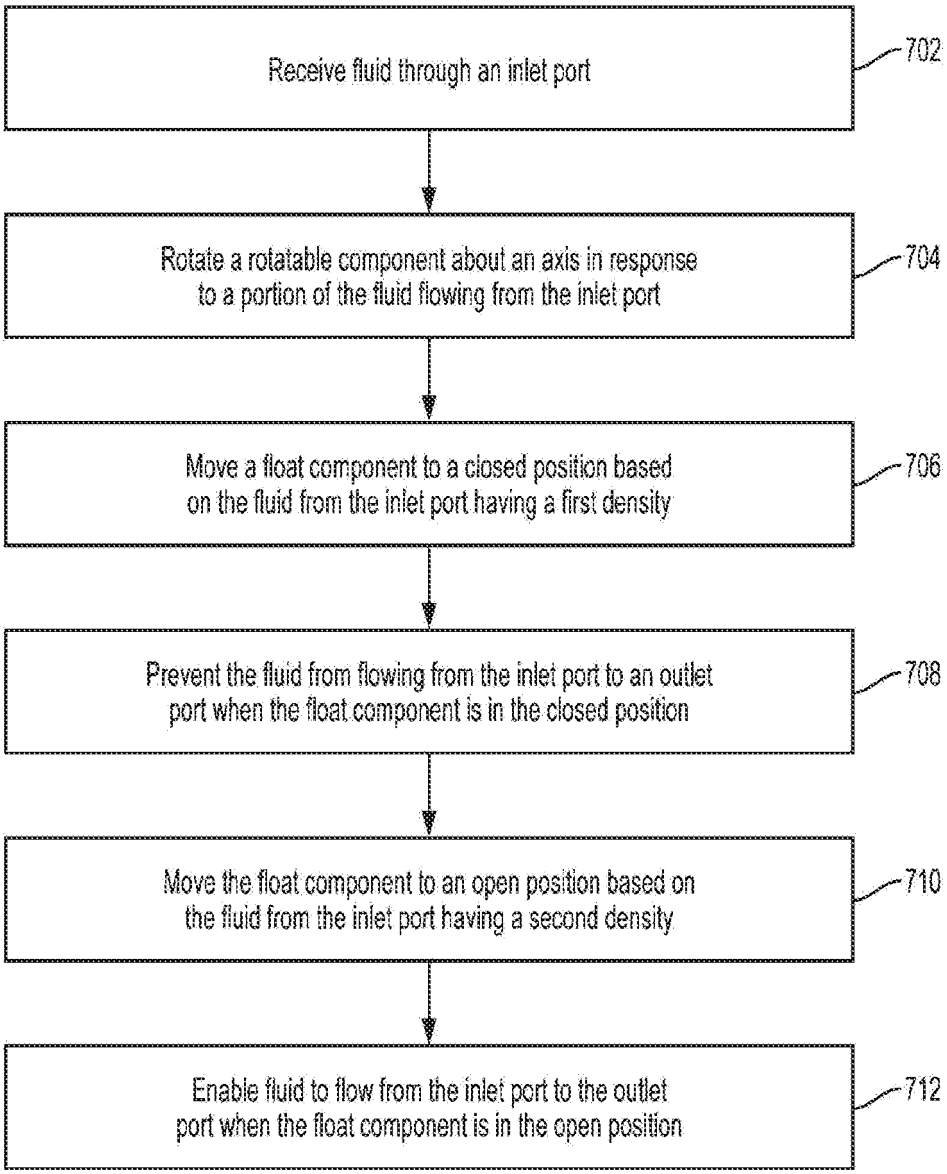
Receive fluid through an inlet port
702
Rotate a rotatable component about an axis in response to a portion of the fluid flowing from the inlet port
704
Move a float component to a closed position based on the fluid from the inlet port having a first density
706
Prevent the fluid from flowing from the inlet port to an outlet port when the float component is in the closed position
708
Move the float component to an open position based on the fluid from the inlet port having a second density
710
Enable fluid to flow from the inlet port to the outlet port when the float component is in the open position
712

Fig. 7

Fig. 8

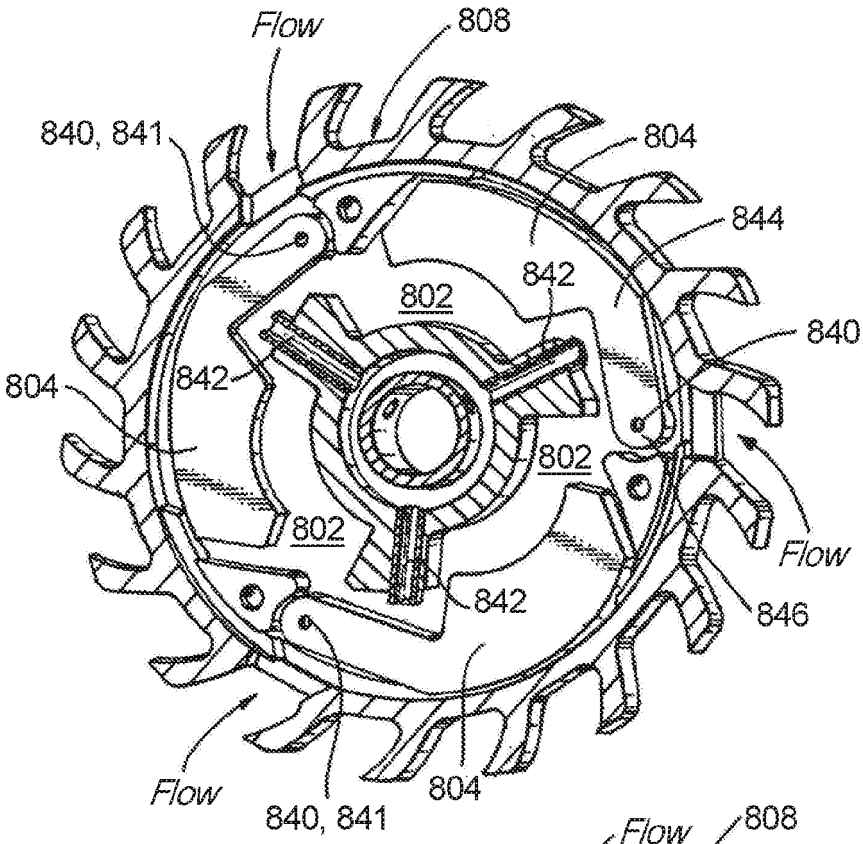
Flow
808
840, 841
804
800
844
842
802
840, 841
804
842
802
802
Flow
842
846
Flow
804
840, 841

Fig. 9

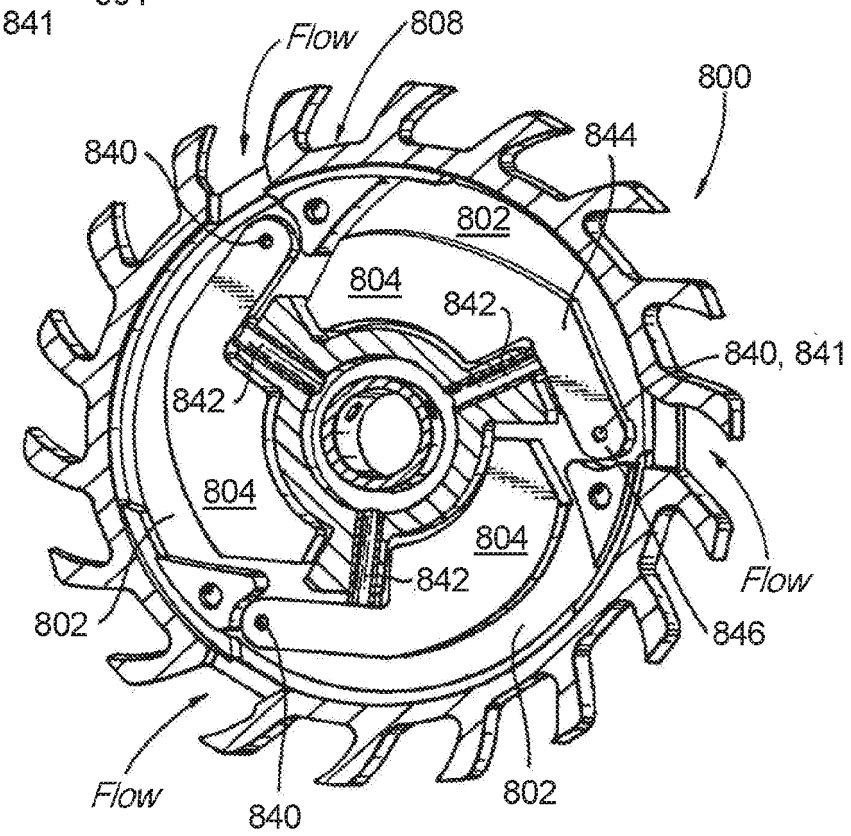
Flow
808
800
840
844
802
804
842
840, 841
842
804
804
842
Flow
802
846
Flow
840
802

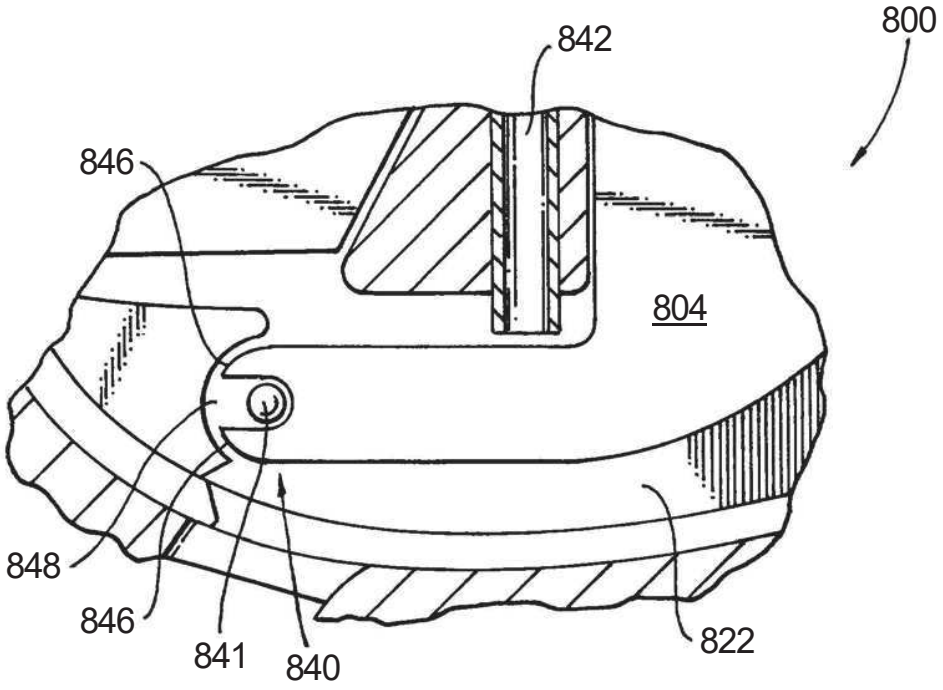

Fig. 10

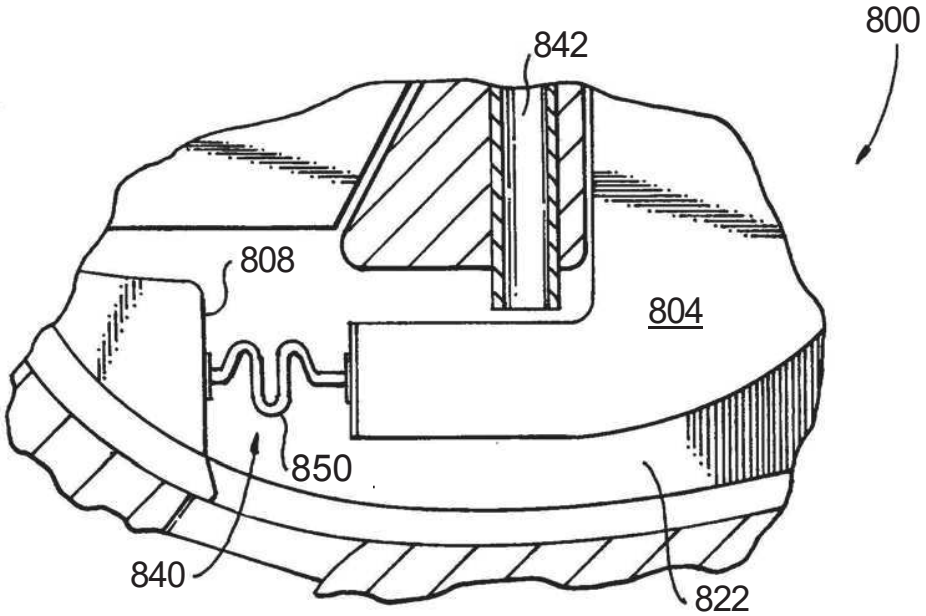

Fig. 11

Fig. 12

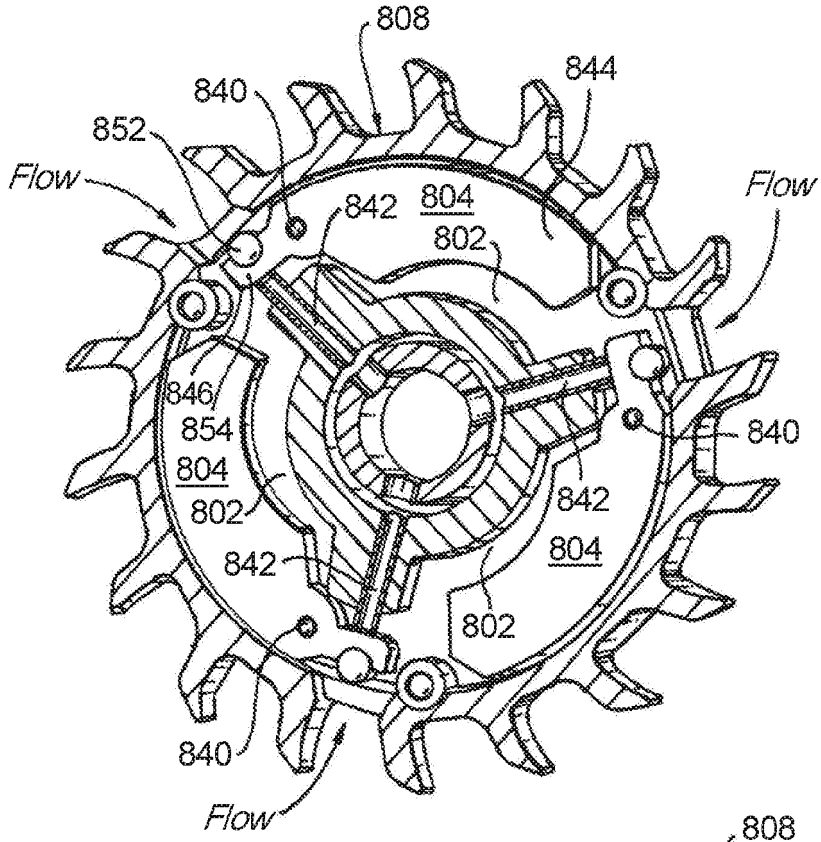
808
844
840
852
Flow
842
804
802
800
Flow
846
854
804
802
840
842
804
842
802
840
Flow

Fig. 13

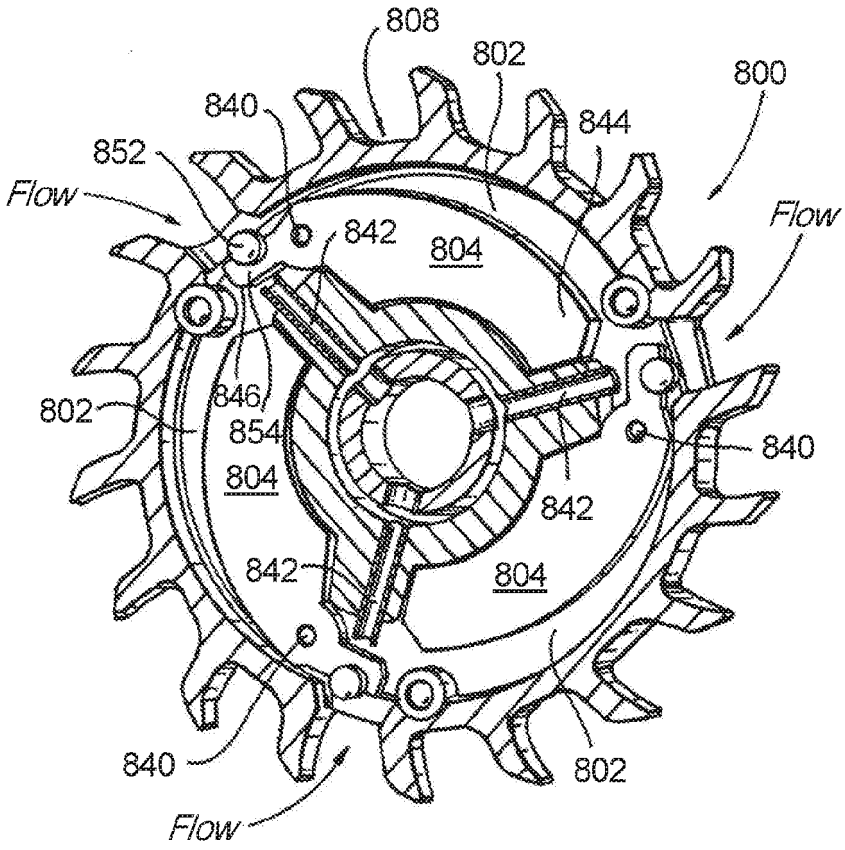
808
802
800
840
844
852
Flow
Flow
842
804
846
802
854
840
804
842
842
804
840
802
Flow

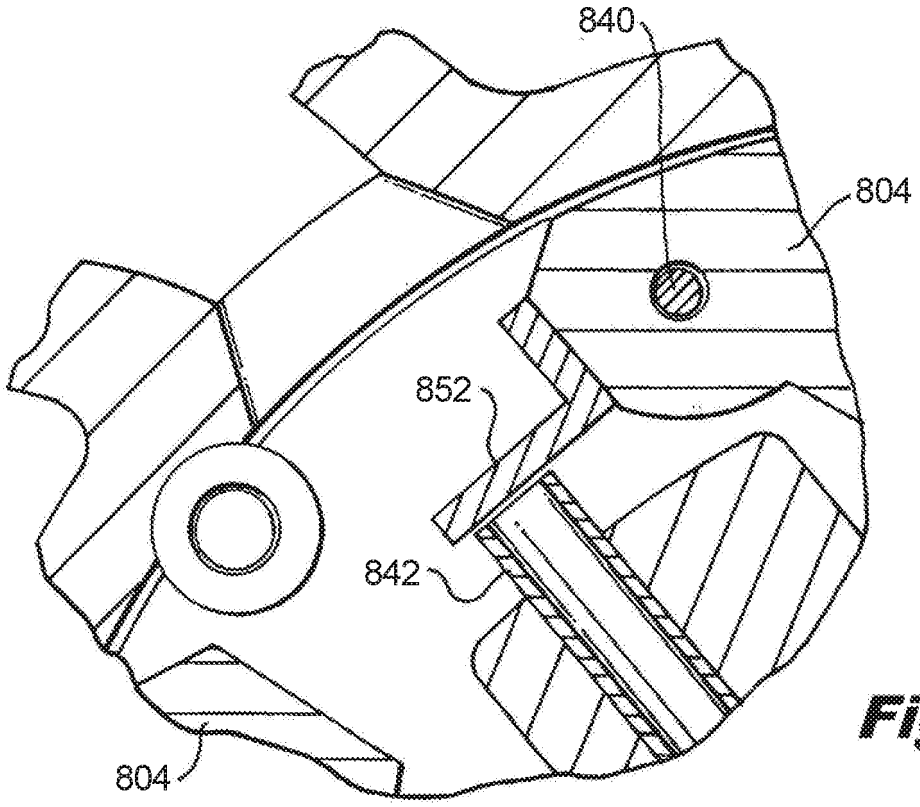

Fig. 14

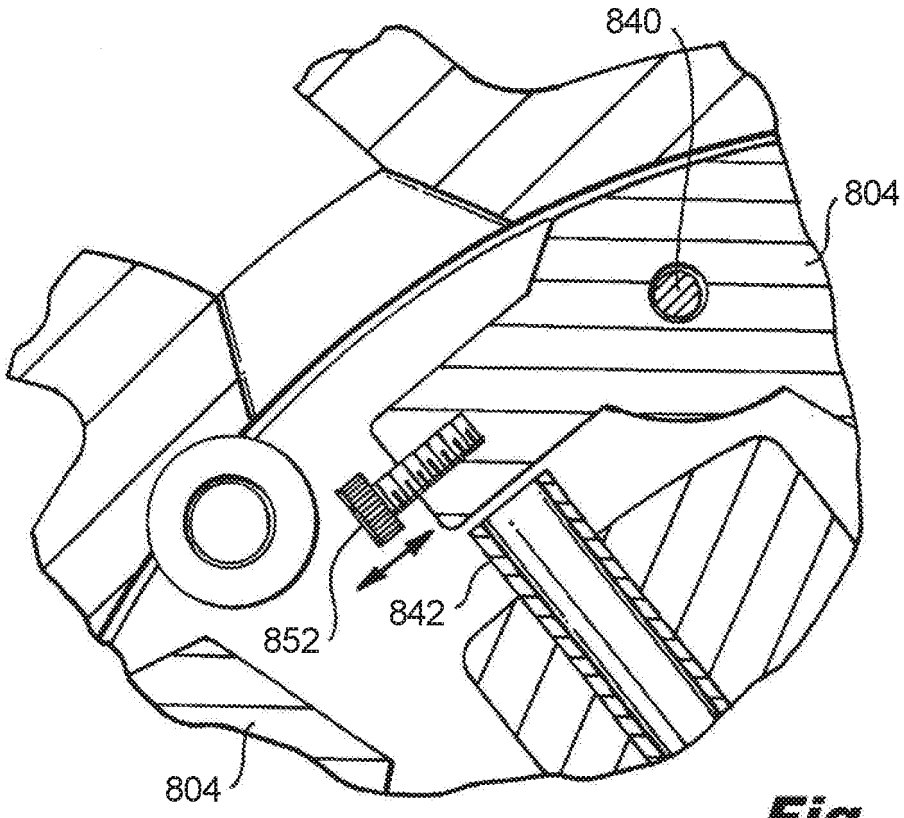

Fig. 15