(12) INTERNATIONAL APPLICATION PUBLISHED UNDER THE PATENT COOPERATION TREATY (PCT)

(19) World Intellectual Property Organization
International Bureau

(43) International Publication Date
11 November 2010 (11.11.2010)

PCT

(10) International Publication Number
WO 2010/129470 A3

(51) International Patent Classification:
A61F 13/56 (2006.01) *A61F 13/62* (2006.01)

(21) International Application Number:
PCT/US2010/033388

(22) International Filing Date:
3 May 2010 (03.05.2010)

(25) Filing Language: English

(26) Publication Language: English

(30) Priority Data:
61/175,185 4 May 2009 (04.05.2009) US

(71) Applicant *(for all designated States except US)*: **THE PROCTER & GAMBLE COMPANY** [US/US]; One Procter & Gamble Plaza, Cincinnati, Ohio 45202 (US).

(72) Inventors; and

(75) Inventors/Applicants *(for US only)*: **KLINE, Mark, James** [US/US]; 6318 Alert New London Road, Okeana, Ohio 45053 (US). **LAWSON, Michael, Irwin** [US/US]; 1991 Augusta Boulevard, Fairfield, Ohio 45014 (US). **MACURA, Anna, Elizabeth** [US/US]; 1246 Ridgewood Drive, Loveland, Ohio 45140 (US). **RAYCHECK, Jeromy, Thomas** [US/US]; 310 Locust Forge Lane, Lebanon, Ohio 45036 (US). **RUIZ, Oscar, Antonio** [US/US]; 5628 Harbourwatch Way, Mason, Ohio 45040 (US).

(74) Common Representative: **THE PROCTER & GAMBLE COMPANY**; c/o Eileen L. Hughett, Global Patent Services, 299 East Sixth Street, Sycamore Building, 4th Floor, Cincinnati, Ohio 45202 (US).

(81) Designated States *(unless otherwise indicated, for every kind of national protection available)*: AE, AG, AL, AM, AO, AT, AU, AZ, BA, BB, BG, BH, BR, BW, BY, BZ, CA, CH, CL, CN, CO, CR, CU, CZ, DE, DK, DM, DO, DZ, EC, EE, EG, ES, FI, GB, GD, GE, GH, GM, GT, HN, HR, HU, ID, IL, IN, IS, JP, KE, KG, KM, KN, KP, KR, KZ, LA, LC, LK, LR, LS, LT, LU, LY, MA, MD, ME, MG, MK, MN, MW, MX, MY, MZ, NA, NG, NI, NO, NZ, OM, PE, PG, PH, PL, PT, RO, RS, RU, SC, SD, SE, SG, SK, SL, SM, ST, SV, SY, TH, TJ, TM, TN, TR, TT, TZ, UA, UG, US, UZ, VC, VN, ZA, ZM, ZW.

[Continued on next page]

(54) Title: WEARABLE ARTICLE WITH HIGHLY EXTENSIBLE FASTENING MEMBER HAVING STRESS DISTRIBUTION FEATURES

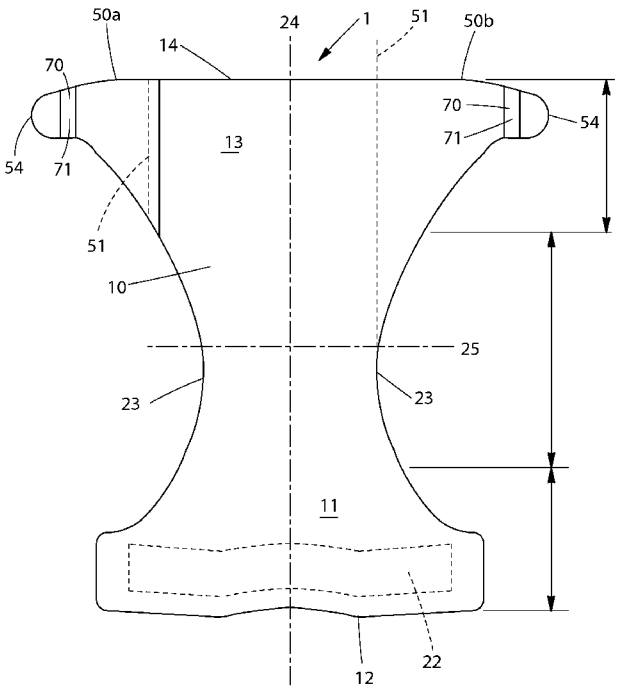

Fig. 1

(57) Abstract: Wearable disposable absorbent articles such as disposable diapers, having elastically extensible fastening members (also sometimes known as fastening "ears") with particular features, extending from a chassis or main portion of the articles, are disclosed. The fastening members may be highly extensible and have an overall geometry characterized by greater length nearer the chassis or main portion and lesser length nearer the distal end. Examples disclosed may have a fastener zone having a Stiffness of at least about 1,500 N/m, and shape and dimensional characteristics, that help avoid problems of buckling and/or flipping of edges of the fastening members, dishing of fastener components, and fastening member tearing, while the articles are applied and worn.

WO 2010/129470 A3

(84) **Designated States** *(unless otherwise indicated, for every kind of regional protection available)*: ARIPO (BW, GH, GM, KE, LR, LS, MW, MZ, NA, SD, SL, SZ, TZ, UG, ZM, ZW), Eurasian (AM, AZ, BY, KG, KZ, MD, RU, TJ, TM), European (AL, AT, BE, BG, CH, CY, CZ, DE, DK, EE, ES, FI, FR, GB, GR, HR, HU, IE, IS, IT, LT, LU, LV, MC, MK, MT, NL, NO, PL, PT, RO, SE, SI, SK, SM, TR), OAPI (BF, BJ, CF, CG, CI, CM, GA, GN, GQ, GW, ML, MR, NE, SN, TD, TG).

Published:

— *with international search report (Art. 21(3))*

— *before the expiration of the time limit for amending the claims and to be republished in the event of receipt of amendments (Rule 48.2(h))*

(88) **Date of publication of the international search report**:
6 January 2011