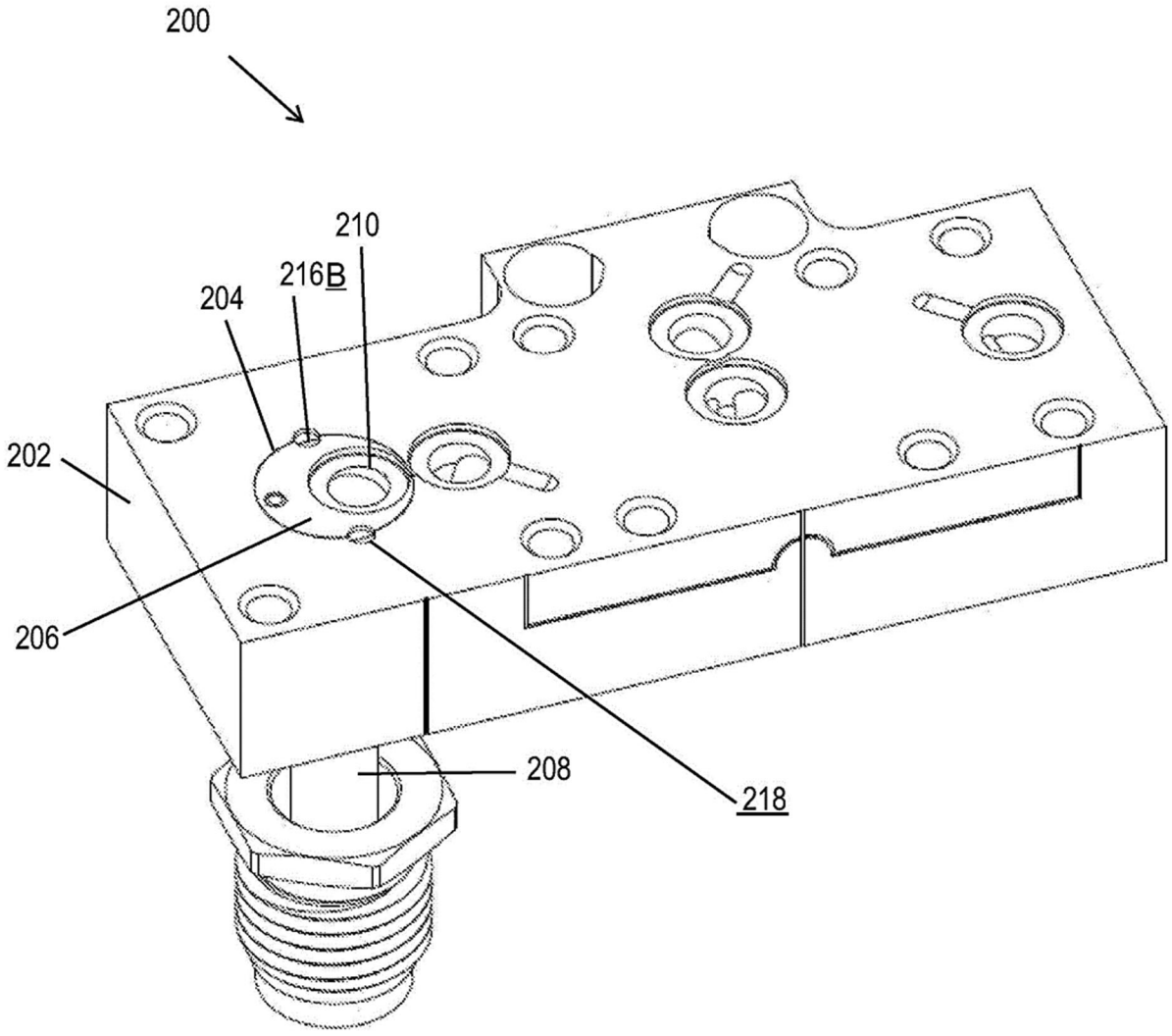

FIG. 2A

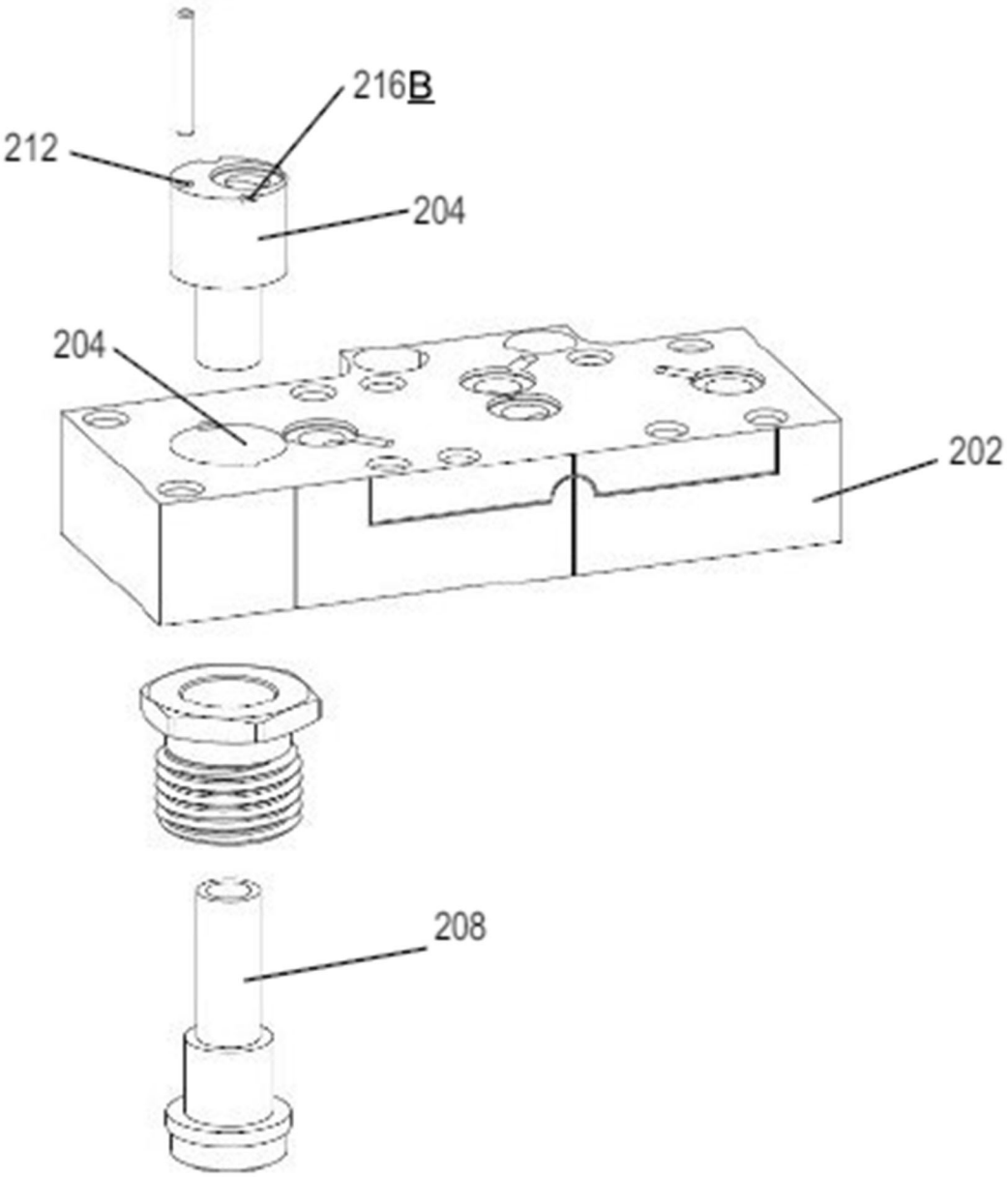

FIG. 2B

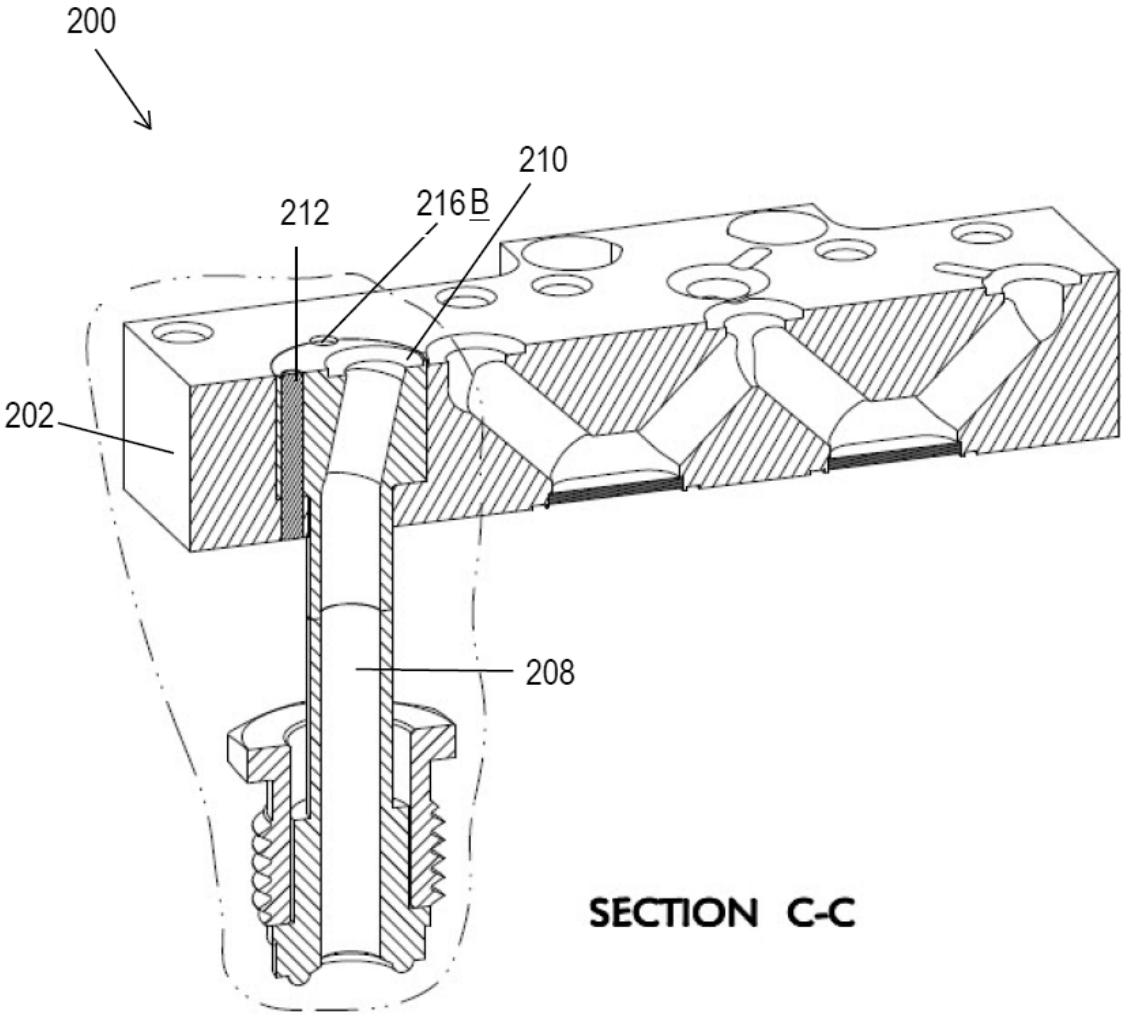

FIG. 2C

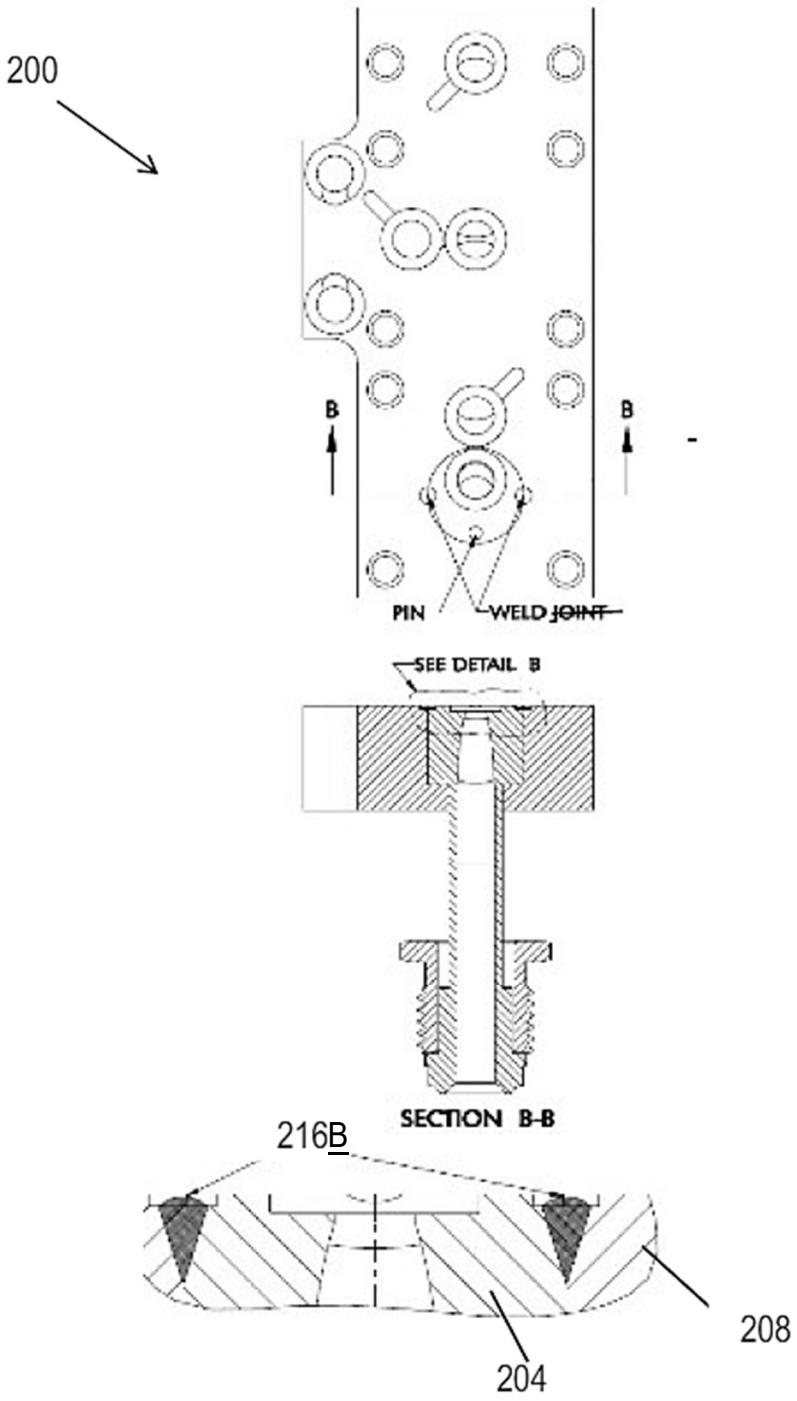

FIG. 2D

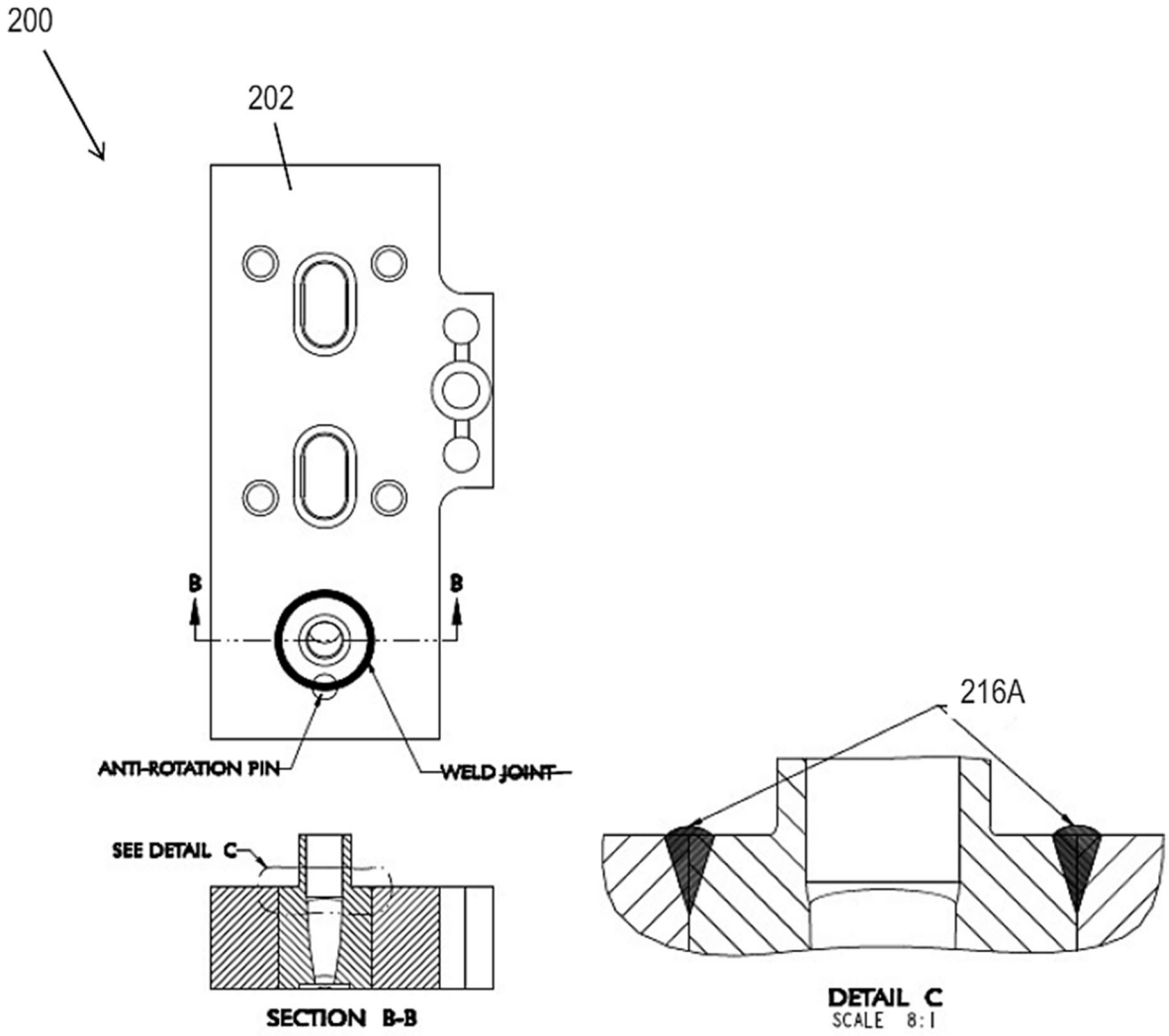
200
202
B
B
ANTI-ROTATION PIN
WELD JOINT
SEE DETAIL C
SECTION B-B
216A
DETAIL C
SCALE 8:1

FIG. 2E