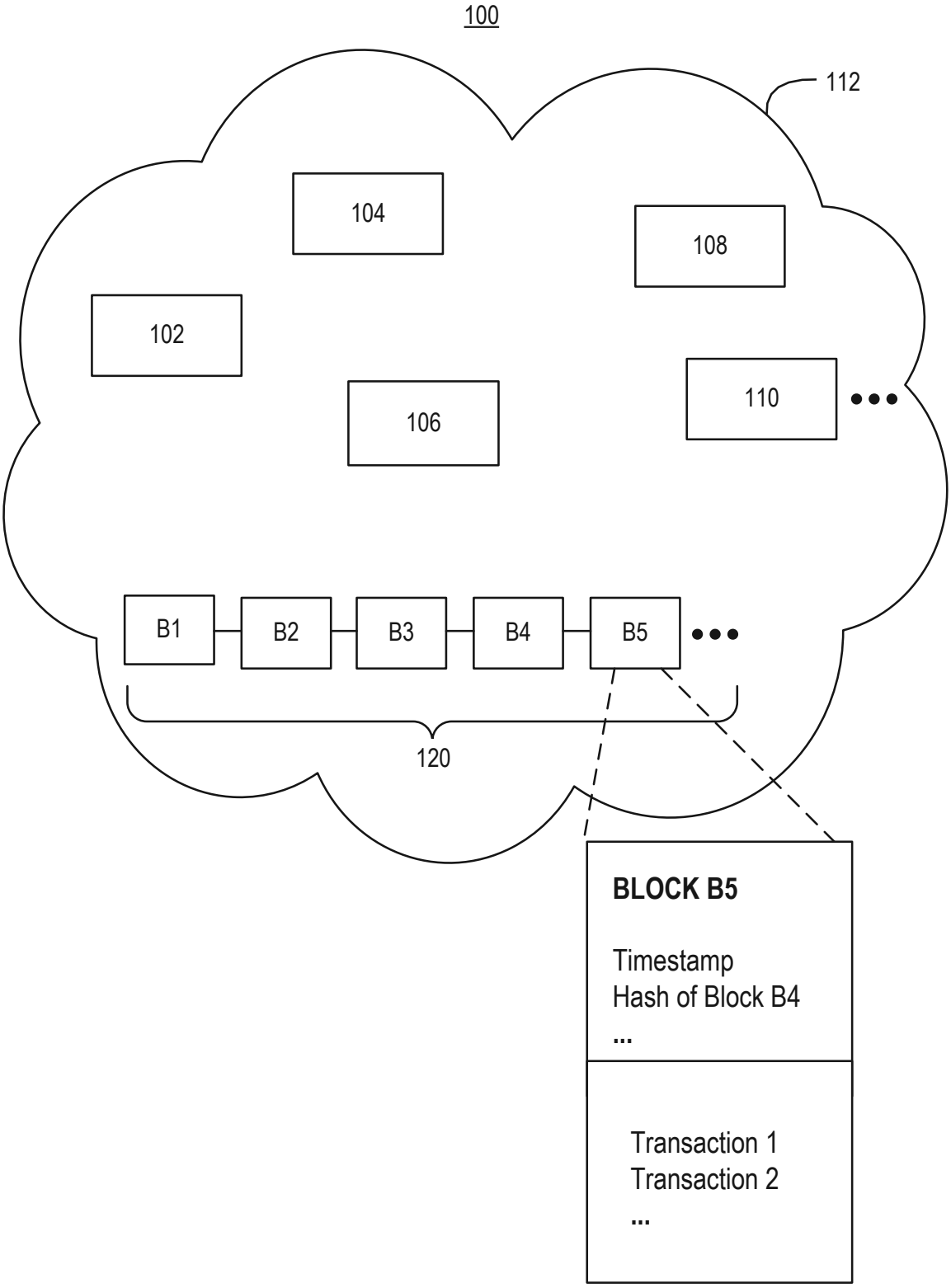
100
112
104
108
102
106
110
B1
B2
B3
B4
B5
120
BLOCK B5
Timestamp
Hash of Block B4
...
Transaction 1
Transaction 2
...

FIG. 1

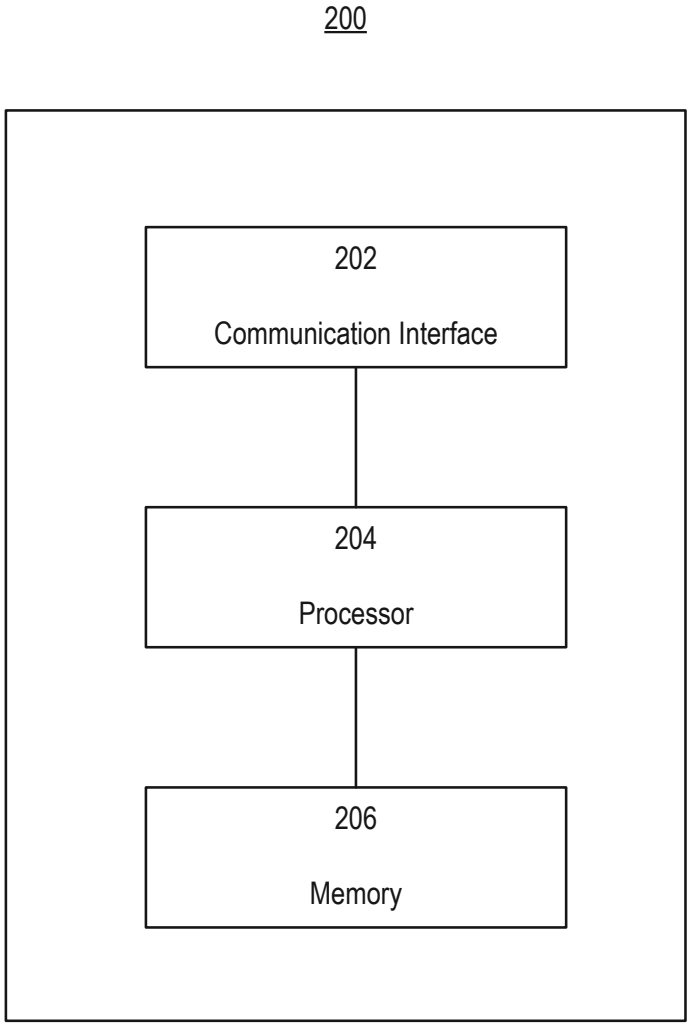

FIG. 2

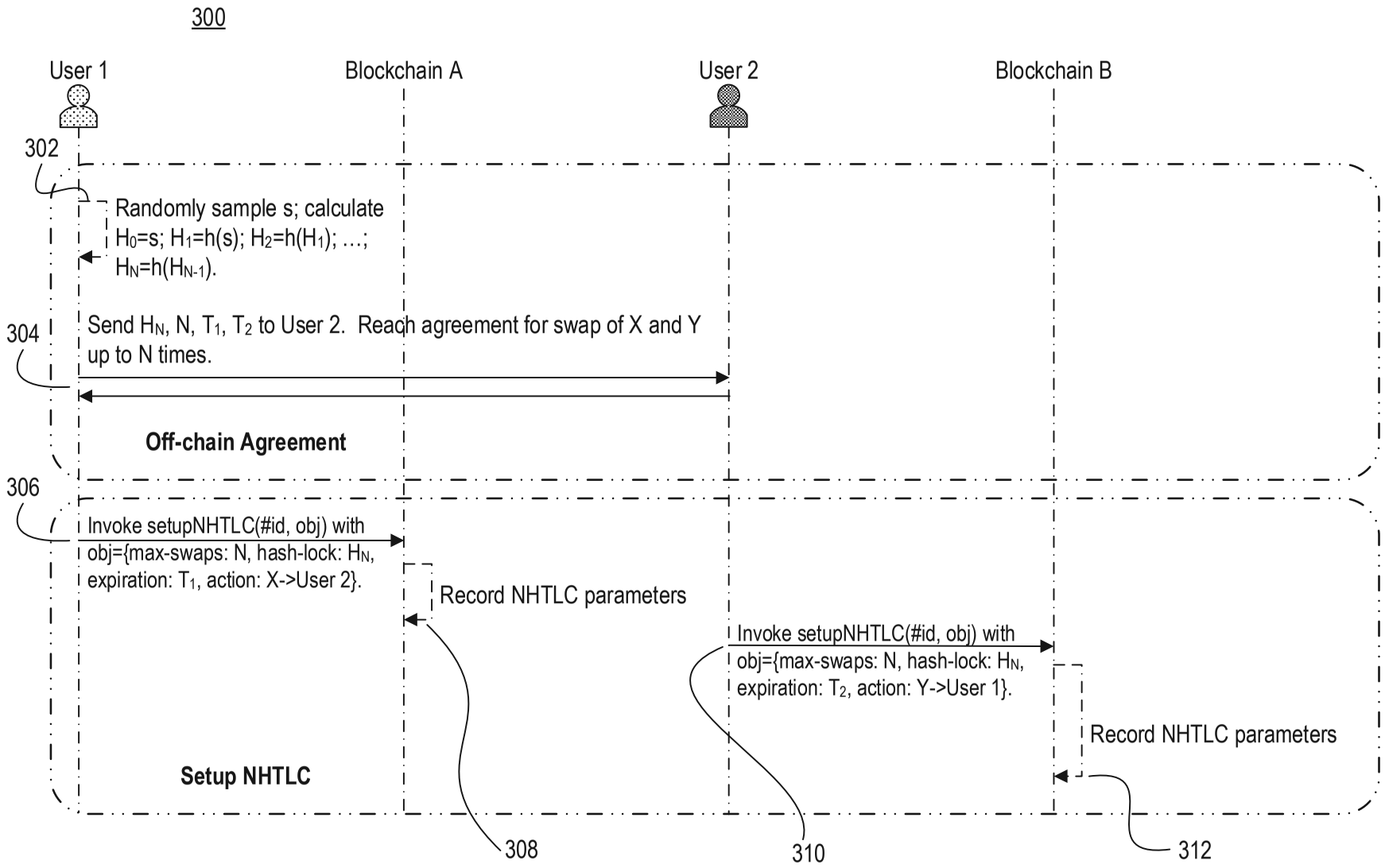
300
User 1
Blockchain A
User 2
Blockchain B
302
Randomly sample s; calculate
H_0=s; H_1=h(s); H_2=h(H_1); ...;
H_N=h(H_{N-1}).
304
Send H_N, N, T_1, T_2 to User 2. Reach agreement for swap of X and Y
up to N times.
Off-chain Agreement
306
Invoke setupNHTLC(#id, obj) with
obj={max-swaps: N, hash-lock: H_N,
expiration: T_1, action: X->User 2}.
Record NHTLC parameters
Invoke setupNHTLC(#id, obj) with
obj={max-swaps: N, hash-lock: H_N,
expiration: T_2, action: Y->User 1}.
Record NHTLC parameters
Setup NHTLC
308
310
312

FIG. 3

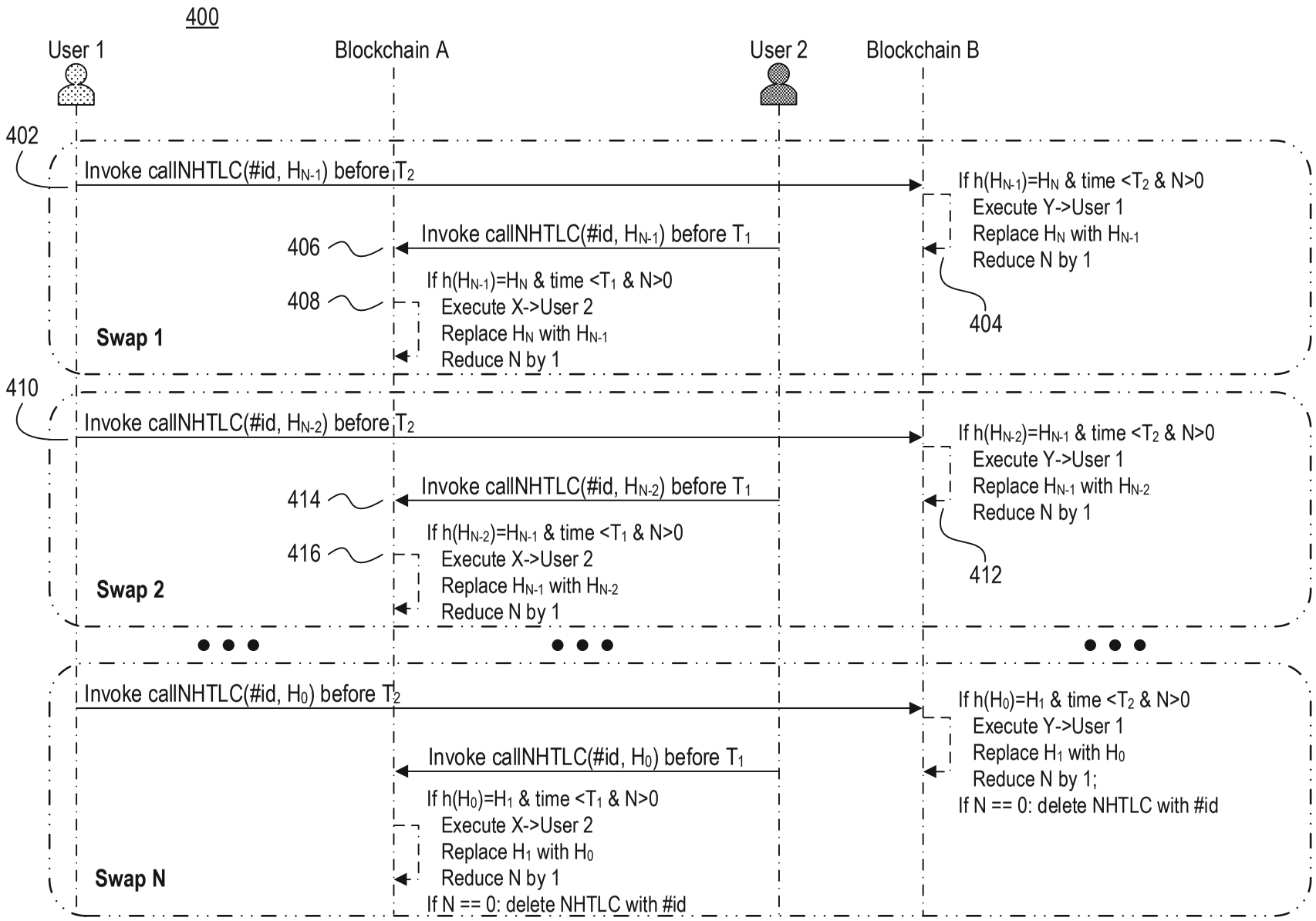
400
User 1
Blockchain A
User 2
Blockchain B
402
Invoke callNHTLC(#id, H_{N-1}) before T_2
If $h(H_{N-1})=H_N$ & time $<T_2$ & $N>0$
Execute Y->User 1
Replace H_N with H_{N-1}
Reduce N by 1
404
406
Invoke callNHTLC(#id, H_{N-1}) before T_1
408
If $h(H_{N-1})=H_N$ & time $<T_1$ & $N>0$
Execute X->User 2
Replace H_N with H_{N-1}
Reduce N by 1
Swap 1
410
Invoke callNHTLC(#id, H_{N-2}) before T_2
If $h(H_{N-2})=H_{N-1}$ & time $<T_2$ & $N>0$
Execute Y->User 1
Replace H_{N-1} with H_{N-2}
Reduce N by 1
412
414
Invoke callNHTLC(#id, H_{N-2}) before T_1
416
If $h(H_{N-2})=H_{N-1}$ & time $<T_1$ & $N>0$
Execute X->User 2
Replace H_{N-1} with H_{N-2}
Reduce N by 1
Swap 2
Invoke callNHTLC(#id, H_0) before T_2
If $h(H_0)=H_1$ & time $<T_2$ & $N>0$
Execute Y->User 1
Replace H_1 with H_0
Reduce N by 1;
If N == 0: delete NHTLC with #id
Invoke callNHTLC(#id, H_0) before T_1
If $h(H_0)=H_1$ & time $<T_1$ & $N>0$
Execute X->User 2
Replace H_1 with H_0
Reduce N by 1
If N == 0: delete NHTLC with #id
Swap N

FIG. 4

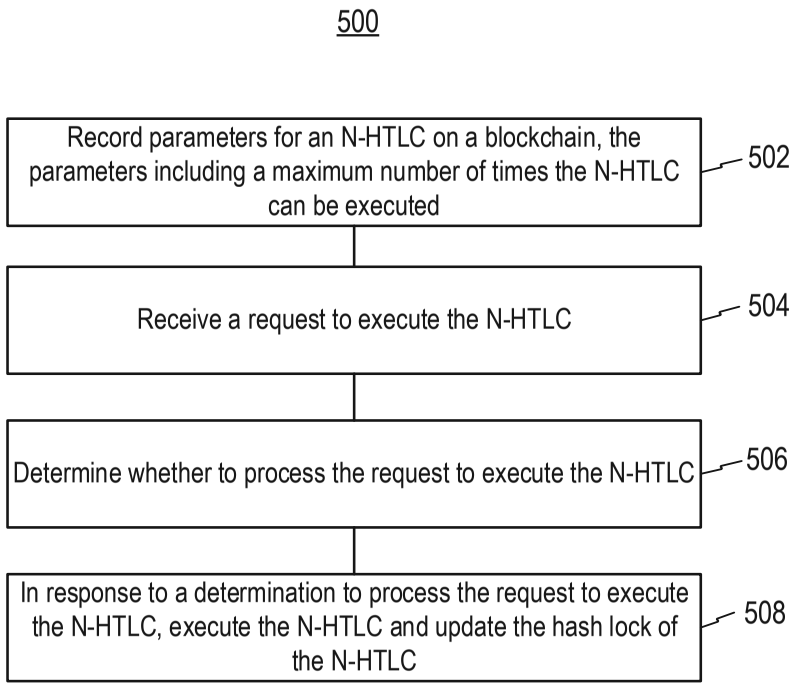
500
Record parameters for an N-HTLC on a blockchain, the parameters including a maximum number of times the N-HTLC can be executed
502
Receive a request to execute the N-HTLC
504
Determine whether to process the request to execute the N-HTLC
506
In response to a determination to process the request to execute the N-HTLC, execute the N-HTLC and update the hash lock of the N-HTLC
508

FIG. 5

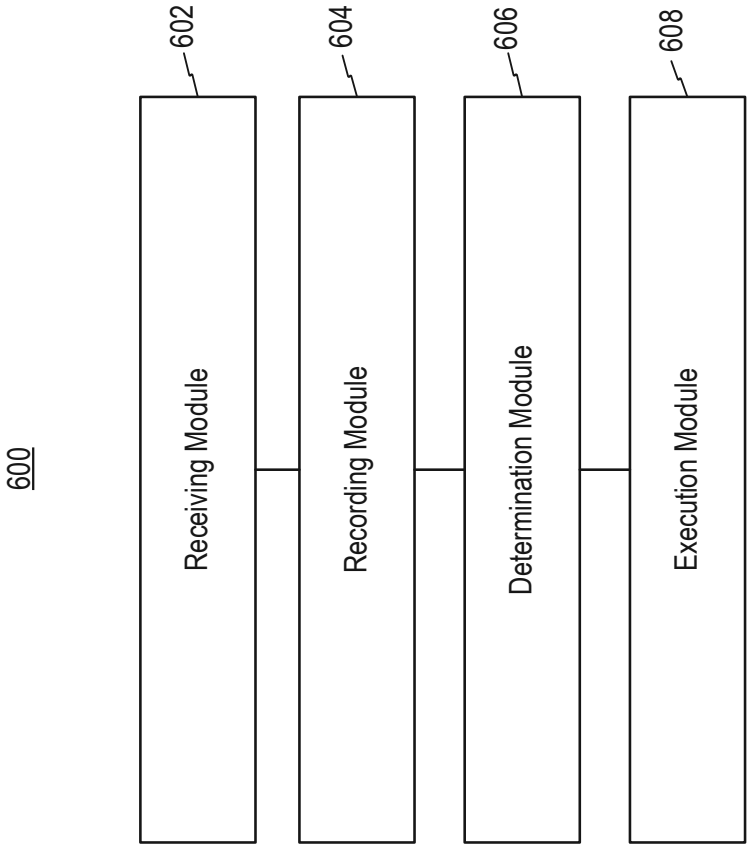
600
Receiving Module
602
Recording Module
604
Determination Module
606
Execution Module
608

FIG. 6