(12) INTERNATIONAL APPLICATION PUBLISHED UNDER THE PATENT COOPERATION TREATY (PCT)

(19) World Intellectual Property Organization
International Bureau

(43) International Publication Date
10 September 2026 (10.09.2026)

WIPO | PCT

(10) International Publication Number
WO 2026/187288 A1

(51) International Patent Classification:
B65D 51/28 (2006.01)

(21) International Application Number:
PCT/SG2025/050146

(22) International Filing Date:
04 March 2025 (04.03.2025)

(25) Filing Language: English

(26) Publication Language: English

(71) Applicant: **FORTUNE 9 GROUP PTE. LTD.** [SG/SG]; 114 Lavender Street, #07-84, CT Hub 2, Singapore 338729 (SG).

(72) Inventor: **ZHANG, Wen**; 114 Lavender Street, #07-84, CT Hub 2, Singapore 338729 (SG).

(74) Agent: **YUSARN AUDREY LLC**; 4 Shenton Way, #14-03, SGX Centre 2, Singapore 068807 (SG).

(81) Designated States *(unless otherwise indicated, for every kind of national protection available)*: AE, AG, AL, AM, AO, AT, AU, AZ, BA, BB, BG, BH, BN, BR, BW, BY, BZ, CA, CH, CL, CN, CO, CR, CU, CV, CZ, DE, DJ, DK, DM, DO, DZ, EC, EE, EG, ES, FI, GB, GD, GE, GH, GM, GT, HN, HR, HU, ID, IL, IN, IQ, IR, IS, IT, JM, JO, JP, KE, KG, KH, KN, KP, KR, KW, KZ, LA, LC, LK, LR, LS, LU, LY, MA, MD, MG, MK, MN, MU, MW, MX, MY, MZ, NA, NG, NI, NO, NZ, OM, PA, PE, PG, PH, PL, PT, QA, RO, RS, RU, RW, SA, SC, SD, SE, SG, SK, SL, ST, SV, SY, TH, TJ, TM, TN, TR, TT, TZ, UA, UG, US, UY, UZ, VC, VN, WS, ZA, ZM, ZW.

(84) Designated States *(unless otherwise indicated, for every kind of regional protection available)*: ARIPO (BW, CV, GH, GM, KE, LR, LS, MW, MZ, NA, RW, SC, SD, SL, ST,

(54) Title: A DISPENSING BOTTLE CAP COMPRISING A STRESS-RUPTURABLE CHAMBER

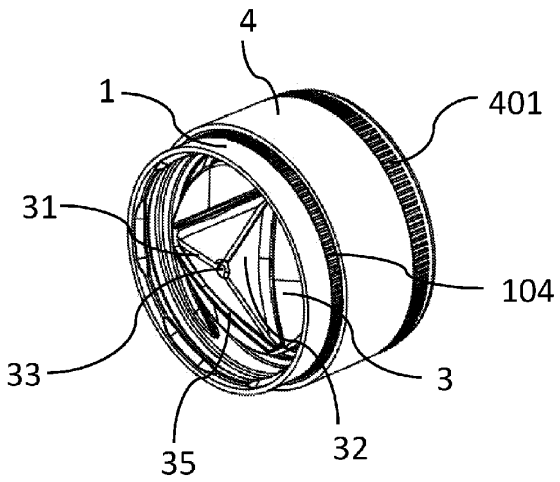

FIG. 4

(57) Abstract: The present invention discloses a dispensing bottle cap comprising a base (1), a pressing key (2), and a chamber bottom (3) positioned inside the base (1). The base (1) comprises a first opening (102) at one end and a second opening (103) at the opposite end. The pressing key (2) comprises a flexible pressing portion (21), a connecting portion (22), and a stress-actuated portion (23). The connecting portion (22) is circumferentially arranged around the pressing portion (21), while the stress-actuated portion (23) extends from the pressing portion (21). The connecting portion (22) is positioned at the first opening (102), and together with the pressing portion (21), the base (1), and the chamber bottom (3), forms a sealed accommodating chamber (101). The present invention enables progressive, directed puncturing from a point to a line through a simultaneous rupturing and pushing process, thereby reducing the force required to break the chamber bottom (3) (i.e., a stress-rupturable chamber) and ensuring smoother dispensing of the preloaded

WO 2026/187288 A1

[Continued on next page]

SZ, TZ, UG, ZM, ZW), Eurasian (AM, AZ, BY, KG, KZ, RU, TJ, TM), European (AL, AT, BE, BG, CH, CY, CZ, DE, DK, EE, ES, FI, FR, GB, GR, HR, HU, IE, IS, IT, LT, LU, LV, MC, ME, MK, MT, NL, NO, PL, PT, RO, RS, SE, SI, SK, SM, TR), OAPI (BF, BJ, CF, CG, CI, CM, GA, GN, GQ, GW, KM, ML, MR, NE, SN, TD, TG).

Declarations under Rule 4.17:

— *as to applicant's entitlement to apply for and be granted a patent (Rule 4.17(ii))*

— *of inventorship (Rule 4.17(iv))*

Published:

— *with international search report (Art. 21(3))*

— *in black and white; the international application as filed contained color or greyscale and is available for download from PATENTSCOPE*

substance. At the same time, the present invention does not require compromising the structural robustness of the chamber bottom (3), thereby enabling reliable storage of substances, including those that require delicate handling and preservation.