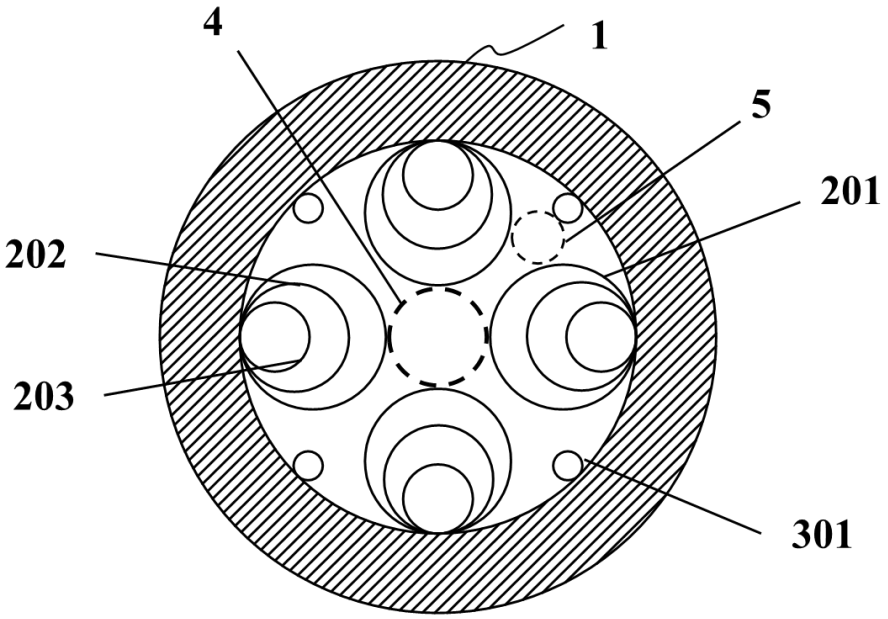
4
1
5
201
202
203
301

Fig. 1

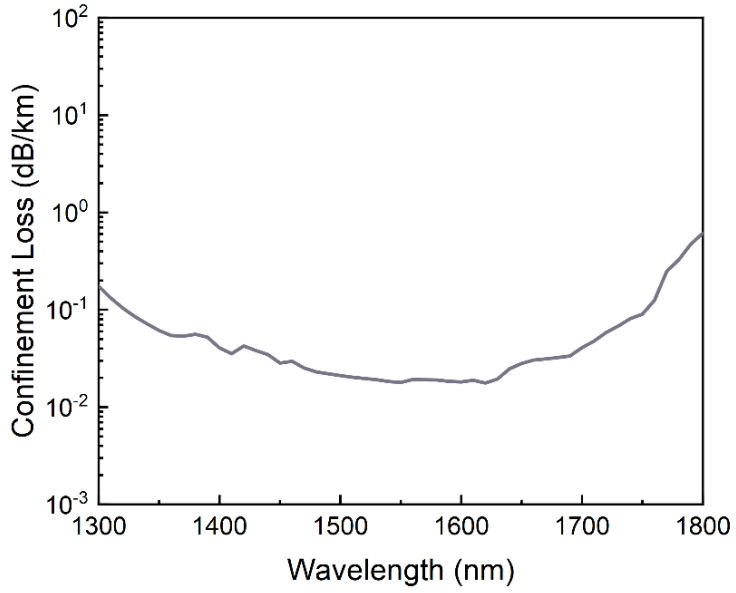
Confinement Loss (dB/km)
10^{2}
10^{1}
10^{0}
10^{-1}
10^{-2}
10^{-3}
1300
1400
1500
1600
1700
1800
Wavelength (nm)

Fig. 2

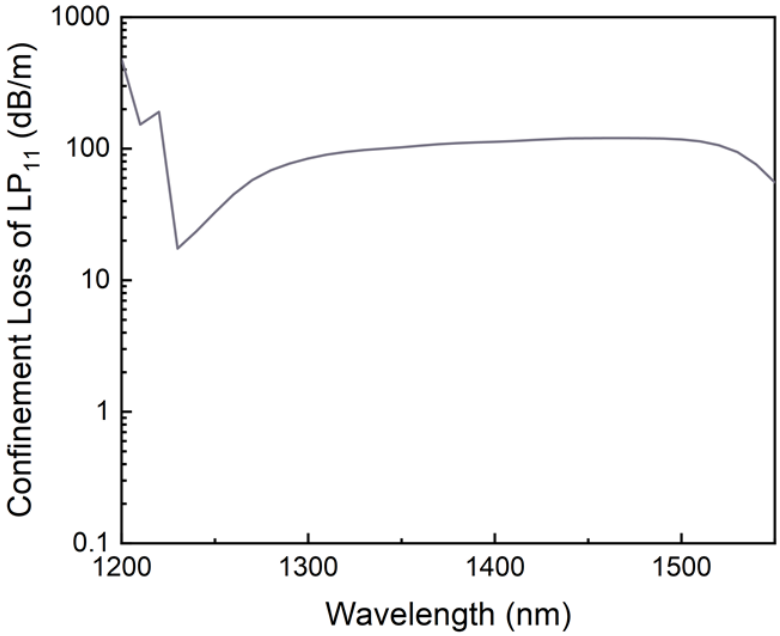
1000
100
10
1
0.1
Confinement Loss of LP11 (dB/m)
1200
1300
1400
1500
Wavelength (nm)

Fig. 3

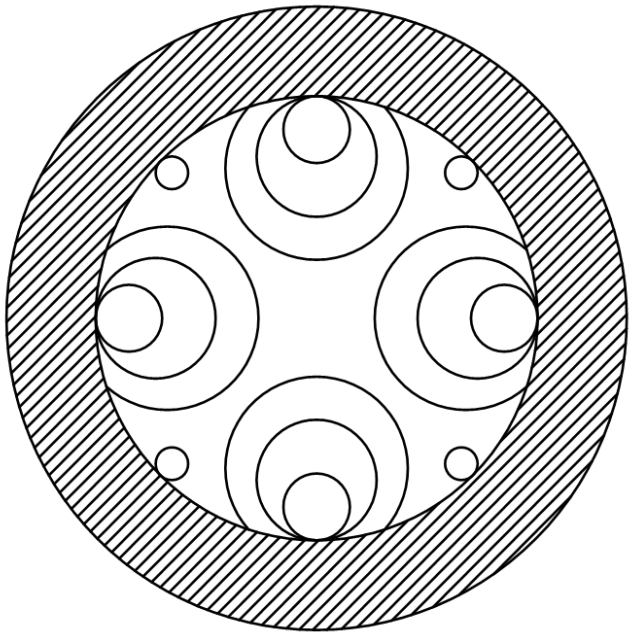

Fig. 4

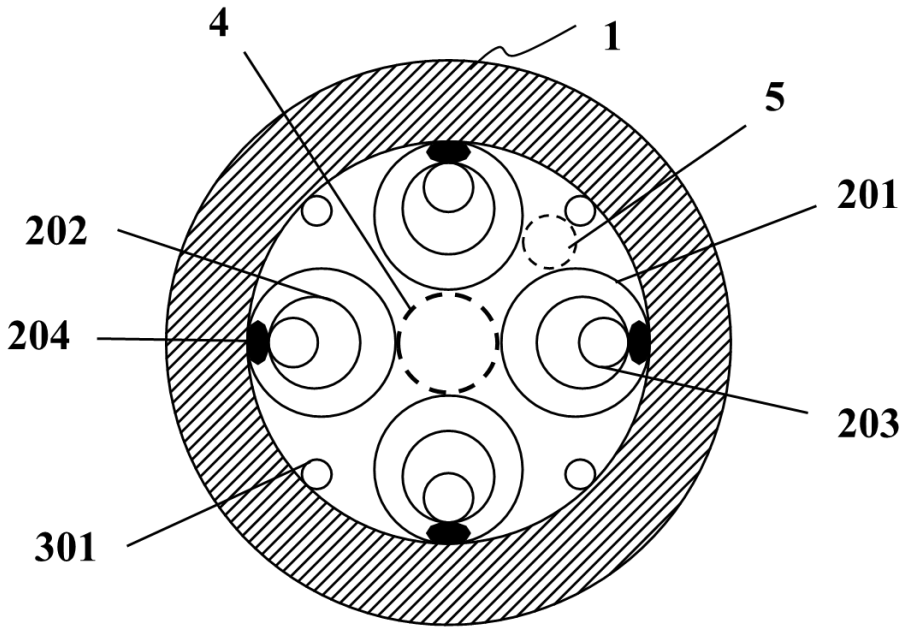
4
1
5
201
202
204
203
301

Fig. 5

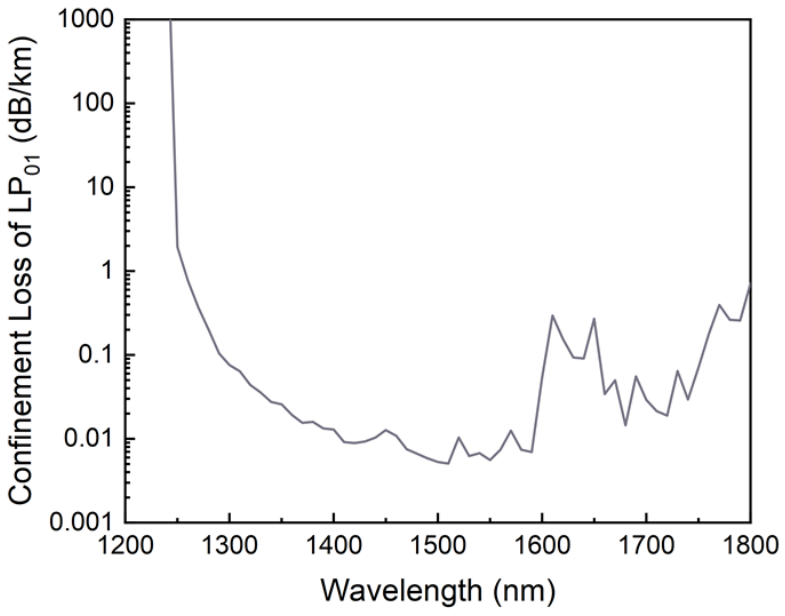
Confinement Loss of LP01 (dB/km)
1000
100
10
1
0.1
0.01
0.001
1200
1300
1400
1500
1600
1700
1800
Wavelength (nm)

Fig. 6

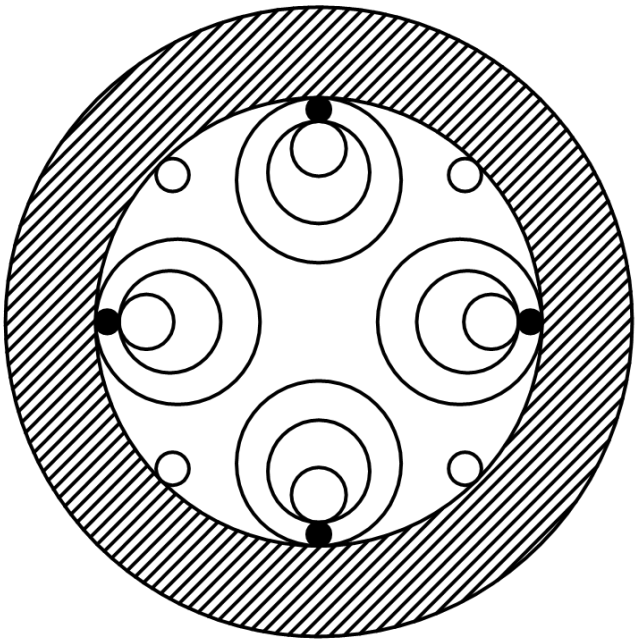

Fig. 7

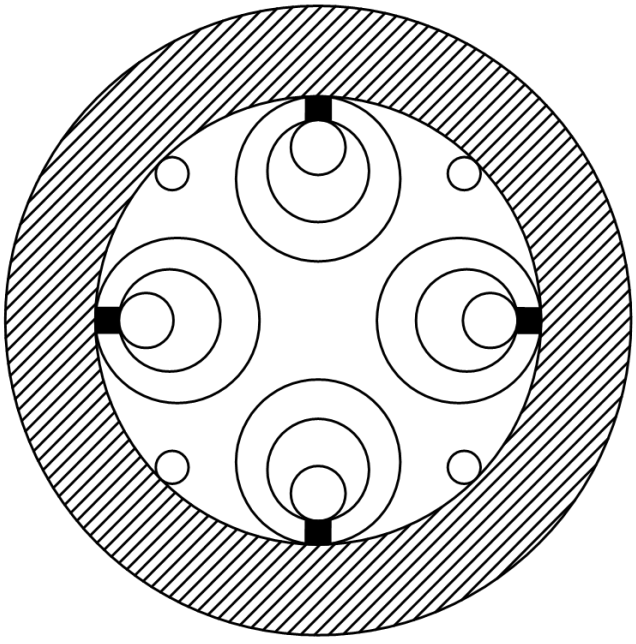

Fig. 8

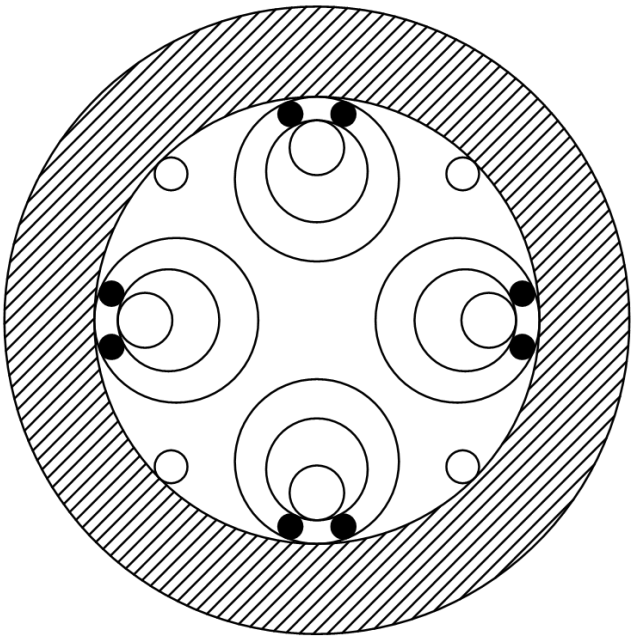

Fig. 9

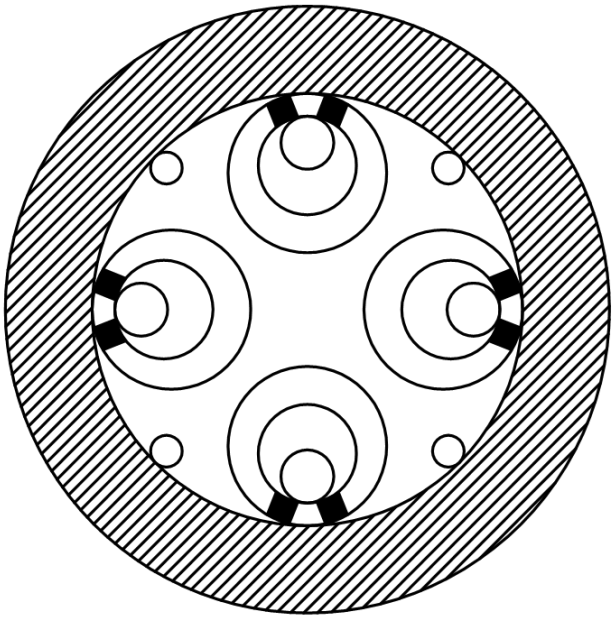

Fig. 10

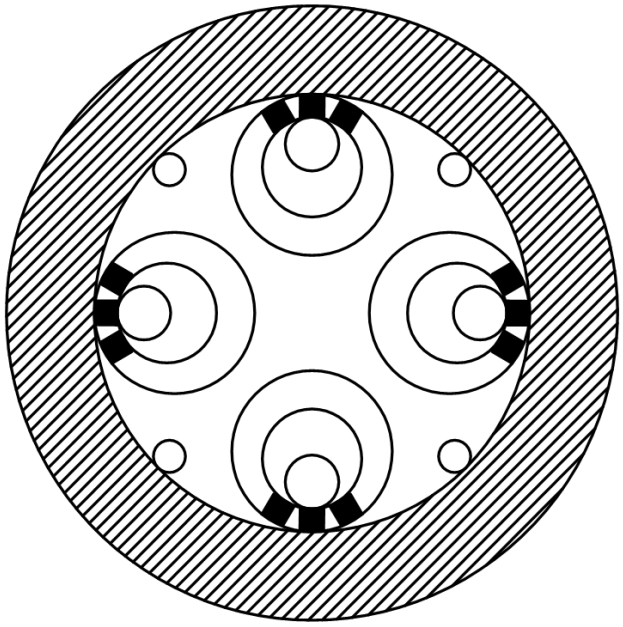

Fig. 11