(12) INTERNATIONAL APPLICATION PUBLISHED UNDER THE PATENT COOPERATION TREATY (PCT)

(19) World Intellectual Property Organization
International Bureau

(43) International Publication Date
25 January 2001 (25.01.2001)

PCT

(10) International Publication Number
WO 01/06140 A1

(51) International Patent Classification[7]: F16C 33/08, 23/04

(21) International Application Number: PCT/US00/18907

(22) International Filing Date: 12 July 2000 (12.07.2000)

(25) Filing Language: English

(26) Publication Language: English

(30) Priority Data:
09/350,351 14 July 1999 (14.07.1999) US

(71) Applicant: E.I. DU PONT DE NEMOURS AND COMPANY [US/US]; 1007 Market Street, Wilmington, DE 19898 (US).

(72) Inventor: STENTA, Christopher, Scott; 259 Willard Drive, North East, MD 21901 (US).

(74) Agent: LANGWORTHY, John, A.; E.I. Du Pont de Nemours and Company, Legal Patent Records Center, 1007 Market Street, Wilmington, DE 19898 (US).

(81) Designated States *(national)*: CA, CN, JP, SG.

(84) Designated States *(regional)*: European patent (AT, BE, CH, CY, DE, DK, ES, FI, FR, GB, GR, IE, IT, LU, MC, NL, PT, SE).

Published:
— *With international search report.*

For two-letter codes and other abbreviations, refer to the "Guidance Notes on Codes and Abbreviations" appearing at the beginning of each regular issue of the PCT Gazette.

(54) Title: BEARING SYSTEM FOR A ROTATING SHAFT

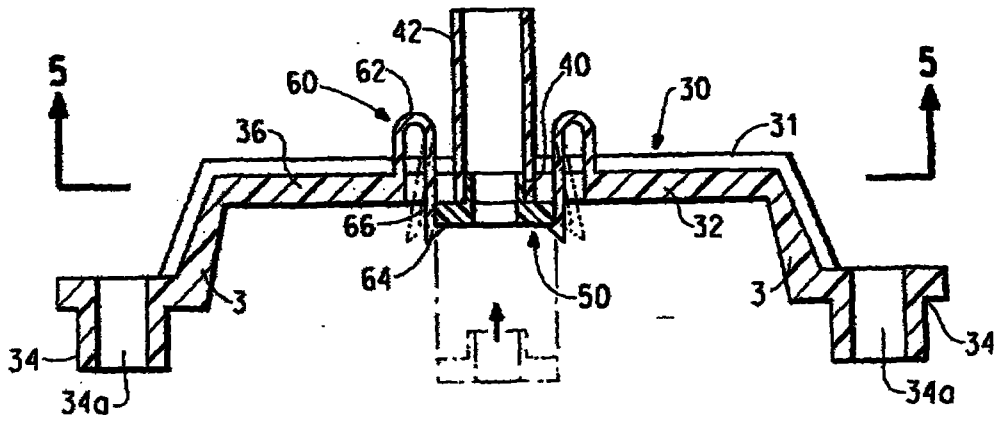

(57) Abstract: A floating bearing system comprising a bearing supported in a clearance fit within a bearing bracket, for example for use in fractional horsepower shaded pole type electric motors. The bearing sytem is self aligning, to compensate for deviations in the axial alignment of the rotor shaft. A rotation lock restrains the bearing against rotation within the bearing receptacle while allowing the bearing to settle into proper alignment with the rotor shaft by automatically shifting the pitch of the axis of the bearing. In the preferred embodiment the bracket is composed of an engineering plastic and the bearing is composed of a high performance plastic polymer, so that the bearing system is non-lubricating. In the preferred embodiment the bearing bracket is provided with retaining fingers which hold the bearing in place during the assembly and working life of the motor.

WO 01/06140 A1