(12) INTERNATIONAL APPLICATION PUBLISHED UNDER THE PATENT COOPERATION TREATY (PCT)

(19) World Intellectual Property Organization
International Bureau

(43) International Publication Date
23 December 2009 (23.12.2009)

PCT

(10) International Publication Number
WO 2009/154789 A1

(51) International Patent Classification:
H01L 21/677 (2006.01)

(21) International Application Number:
PCT/US2009/003686

(22) International Filing Date:
19 June 2009 (19.06.2009)

(25) Filing Language: English

(26) Publication Language: English

(30) Priority Data:
61/074,594 20 June 2008 (20.06.2008) US

(71) Applicant *(for all designated States except US)*: **ASYST TECHNOLOGIES, INC.** [US/US]; 46897 Bayside Parkway, Fremont, CA 94538 (US).

(72) Inventors; and

(75) Inventors/Applicants *(for US only)*: **BONORA, Anthony, C.** [US/US]; 46897 Bayside Parkway, Fremont, CA 94538 (US). **FATULA, Joseph, John, III** [US/US]; 46897 Bayside Parkway, Fremont, CA 94538 (US). **DEYANOV, Roumen, I.** [US/US]; 46897 Bayside Parkway, Fremont, CA 94538 (US). **ITO, Hiroshi** [JP/US]; 46897 Bayside Parkway, Fremont, CA 94538 (US). **HINE, Roger, G.** [US/US]; 46897 Bayside Parkway, Fremont, CA 94538 (US).

(74) Agent: **PENILLA, Albert, S.**; Martine Penilla & Gencarella, LLP, 710 Lakeway Drive, Suite 200, Sunnyvale, CA 94085 (US).

(81) Designated States *(unless otherwise indicated, for every kind of national protection available)*: AE, AG, AL, AM, AO, AT, AU, AZ, BA, BB, BG, BH, BR, BW, BY, BZ, CA, CH, CL, CN, CO, CR, CU, CZ, DE, DK, DM, DO, DZ, EC, EE, EG, ES, FI, GB, GD, GE, GH, GM, GT, HN, HR, HU, ID, IL, IN, IS, JP, KE, KG, KM, KN, KP, KR, KZ, LA, LC, LK, LR, LS, LT, LU, LY, MA, MD, ME, MG, MK, MN, MW, MX, MY, MZ, NA, NG, NI, NO, NZ, OM, PE, PG, PH, PL, PT, RO, RS, RU, SC, SD, SE, SG, SK, SL, SM, ST, SV, SY, TJ, TM, TN, TR, TT, TZ, UA, UG, US, UZ, VC, VN, ZA, ZM, ZW.

[Continued on next page]

(54) Title: DIRECT LOADING TO AND FROM A CONVEYOR SYSTEM

(57) Abstract: A direct load system includes a load port for moving containers in a vertical orientation between a lower position near a conveyor and up to an upper position proximate to a load port door. The load port includes a single arm that moves a support in a vertical configuration, such that moving the single arm allows for the support to be lowered to the conveyor in a nested location between beams of the conveyor. The conveyor includes a single slot in a beam that allows the single arm to pass. The single arm raises up from the nested location, off of the conveyor, and to the load port door. The single arm and interface with the conveyor slot can be used by other tools, such as stockers or tools that need to directly access a conveyor used to transport containers (e g, wafers, etc) to locations/tools of a fabrication facility.

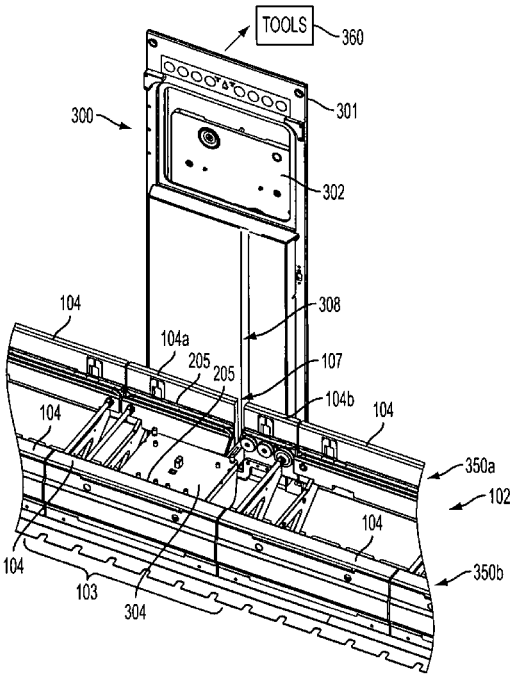

FIG. 5B

WO 2009/154789 A1

(84) **Designated States** *(unless otherwise indicated, for every kind of regional protection available)*: ARIPO (BW, GH, GM, KE, LS, MW, MZ, NA, SD, SL, SZ, TZ, UG, ZM, ZW), Eurasian (AM, AZ, BY, KG, KZ, MD, RU, TJ, TM), European (AT, BE, BG, CH, CY, CZ, DE, DK, EE, ES, FI, FR, GB, GR, HR, HU, IE, IS, IT, LT, LU, LV, MC, MK, MT, NL, NO, PL, PT, RO, SE, SI, SK, TR), OAPI (BF, BJ, CF, CG, CI, CM, GA, GN, GQ, GW, ML, MR, NE, SN, TD, TG).

Published:

— *with international search report (Art. 21(3))*