Fig.1

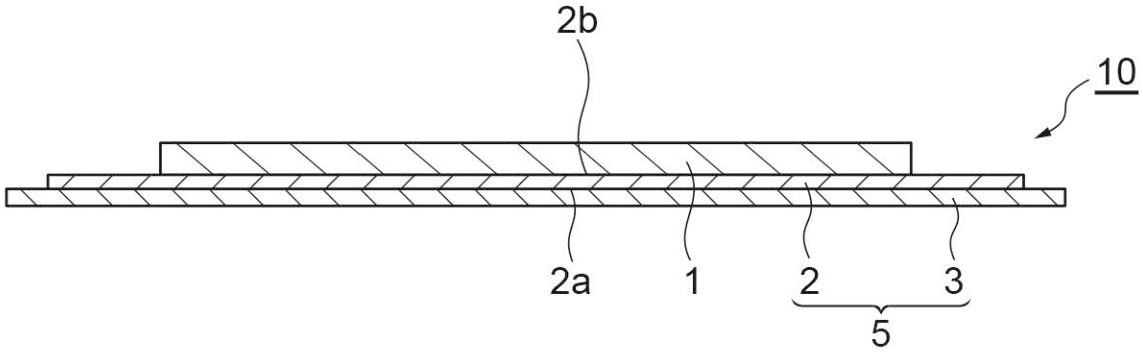

Fig.2

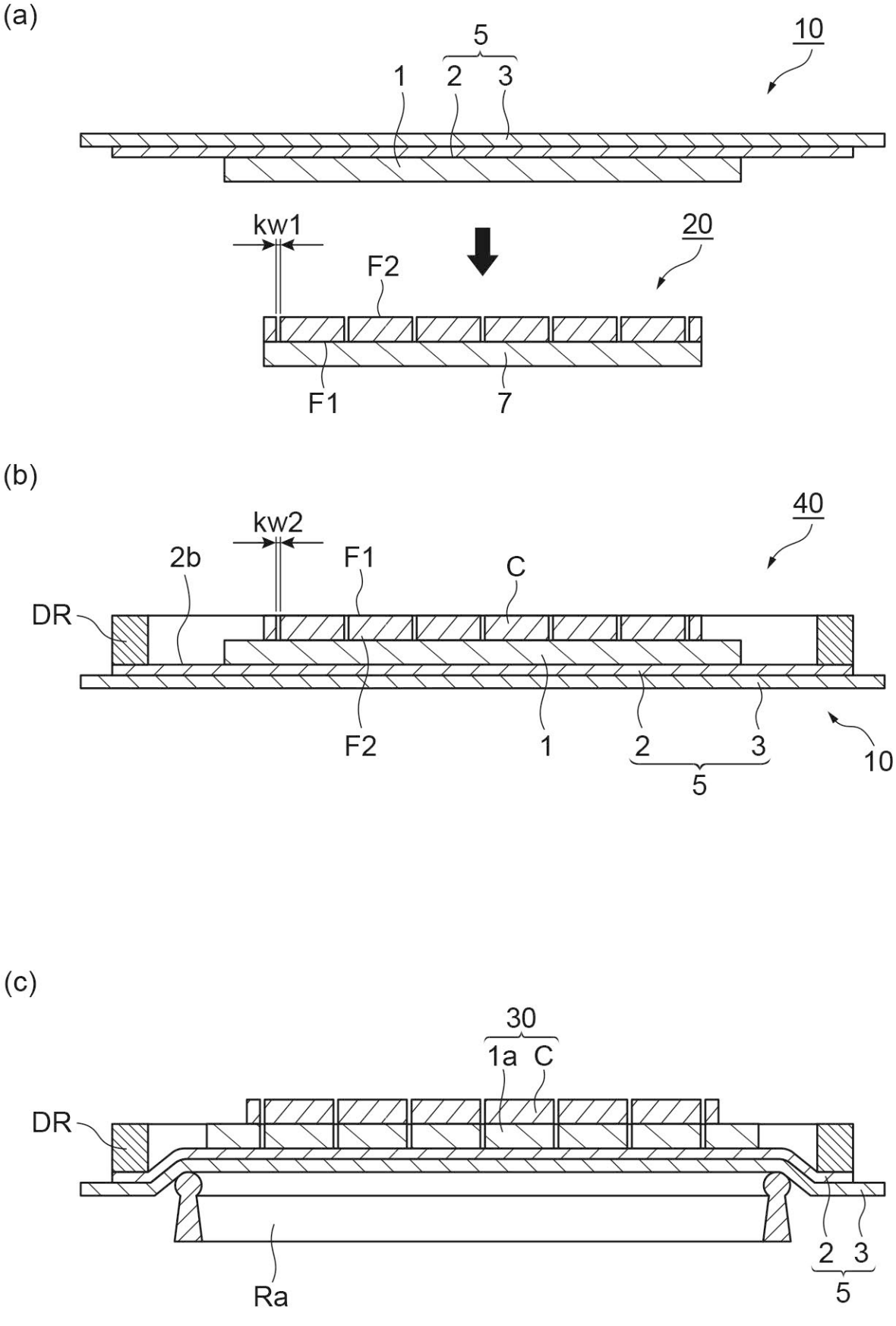
(a)
5
10
1
2
3
kw1
20
F2
F1
7
(b)
40
kw2
2b
F1
C
DR
F2
1
2
3
5
10
(c)
30
1a
C
DR
Ra
2
3
5

Fig.3

(a)

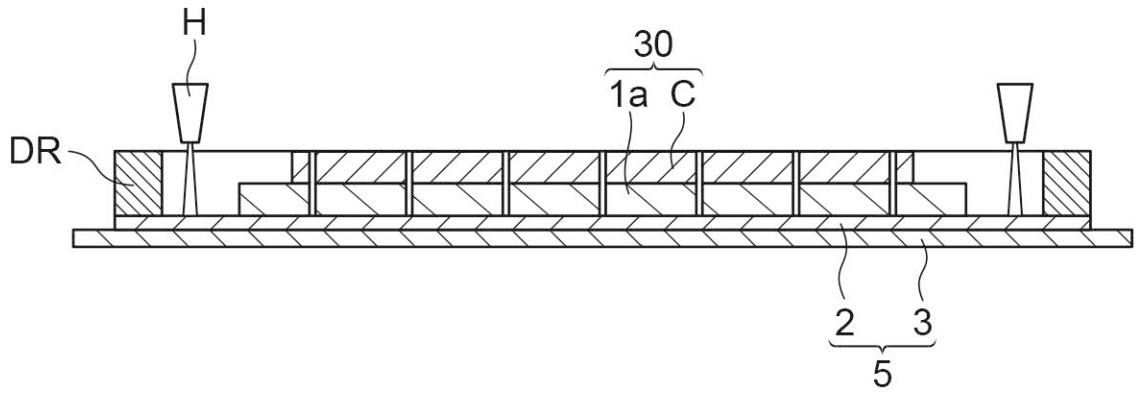

(b)

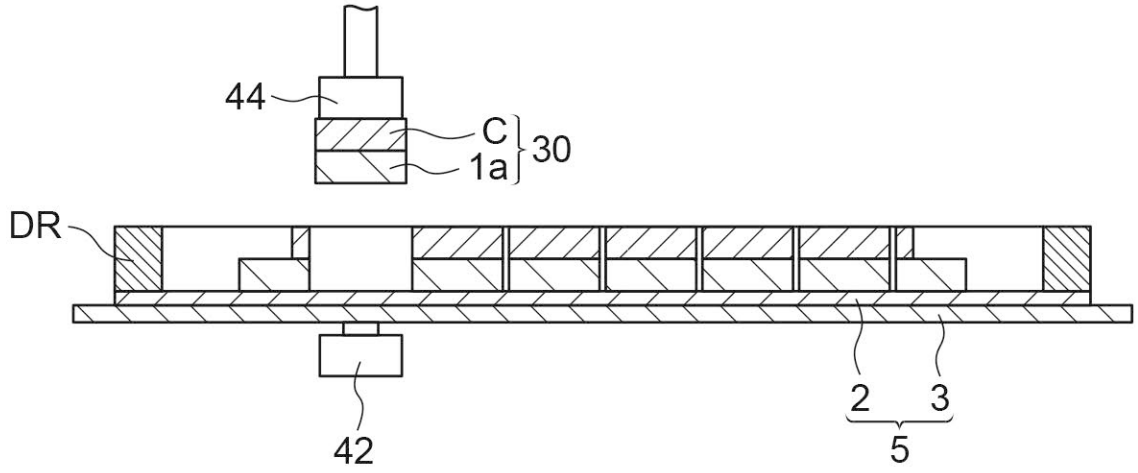

Fig.4

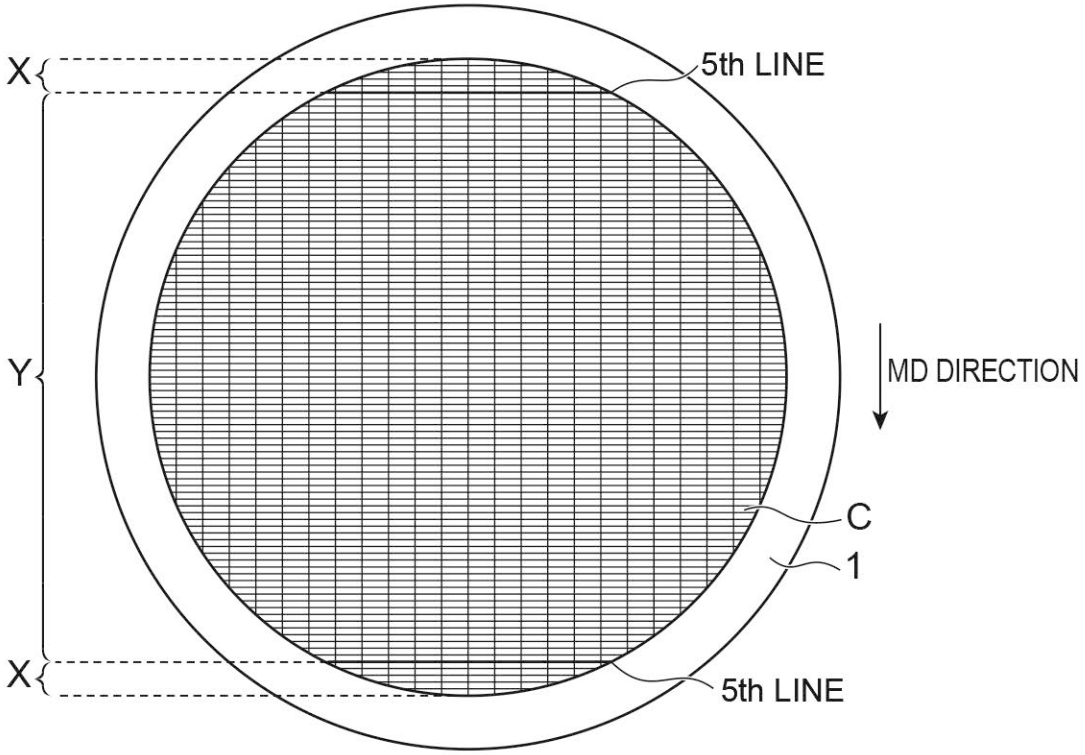

Fig.5

(a)

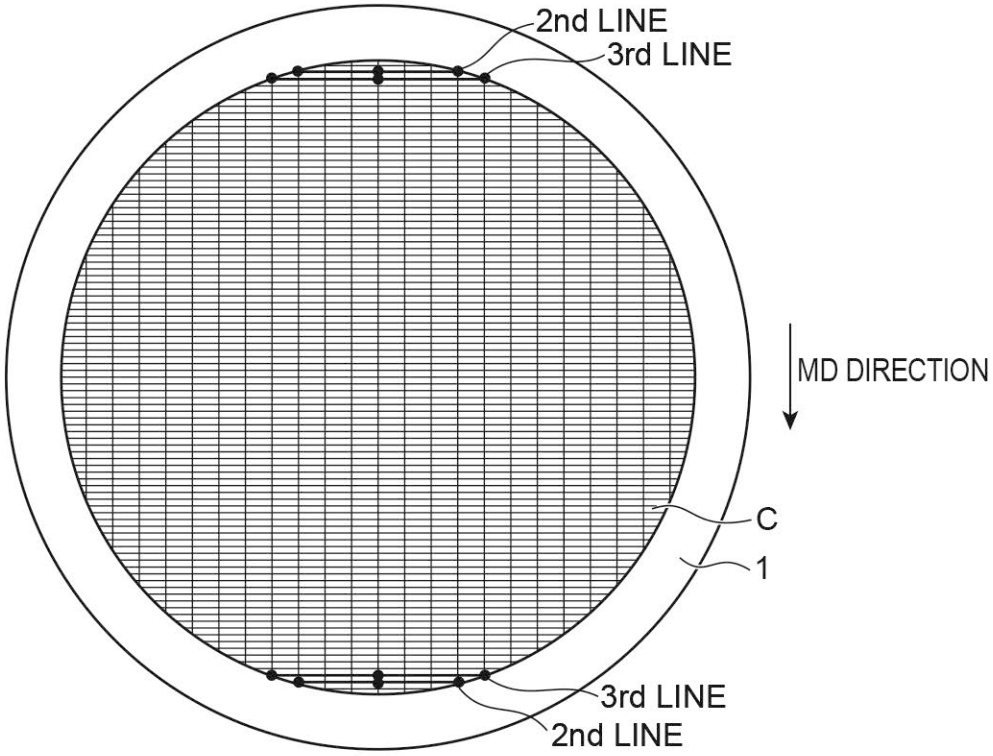
2nd LINE
3rd LINE
MD DIRECTION
C
1
3rd LINE
2nd LINE

(b)

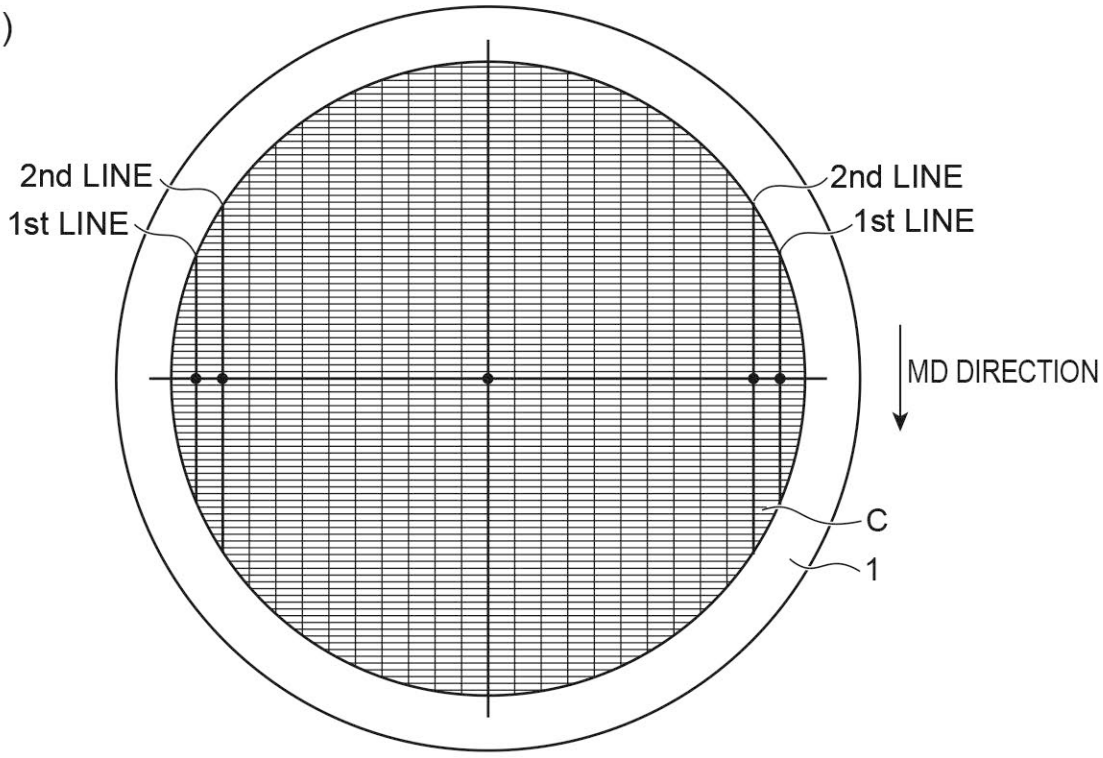
2nd LINE
1st LINE
2nd LINE
1st LINE
MD DIRECTION
C
1

Fig.6

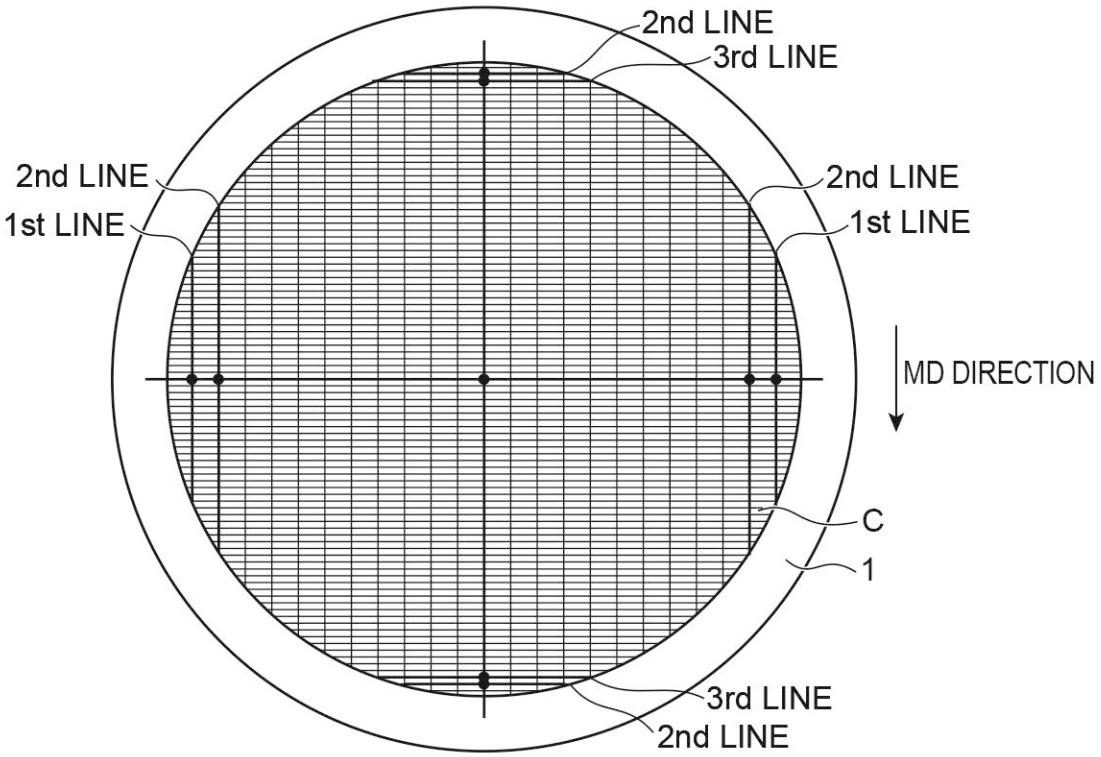
2nd LINE
3rd LINE
2nd LINE
1st LINE
2nd LINE
1st LINE
MD DIRECTION
C
1
3rd LINE
2nd LINE