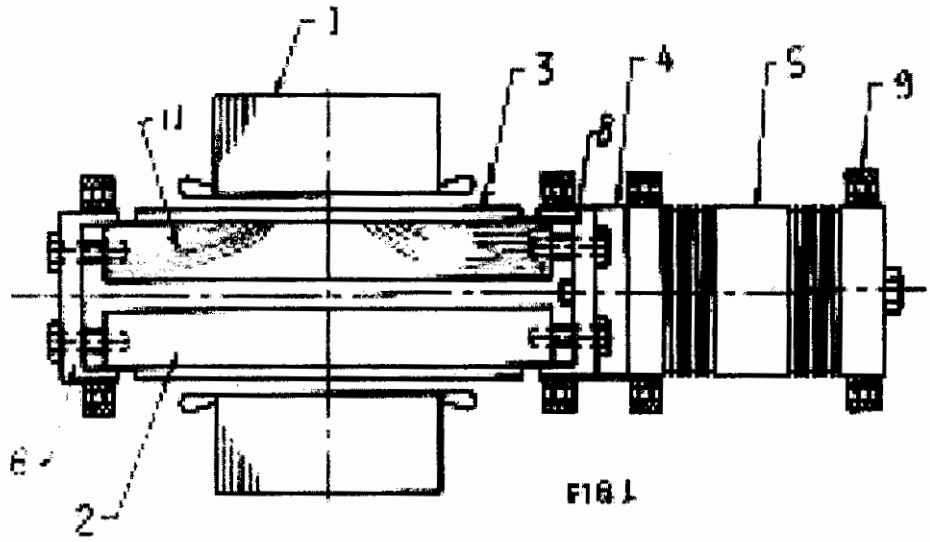

FIG 1

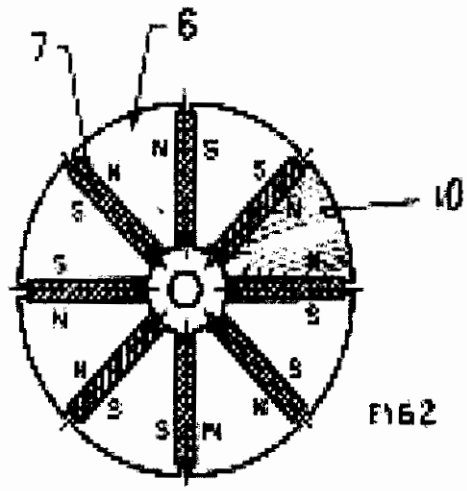

FIG 2

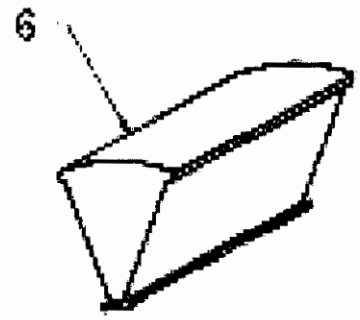

FIG 3