CLAIMS

1. A resist protective film composition comprising a copolymer, wherein the copolymer comprises a repeating unit represented by the following formula (1-a); and a repeating unit represented by any one selected from the group consisting of the following formula (4-a), formula (5-a), formula (6-a), formula (7-a), and combinations thereof:

[Formula 1-a]

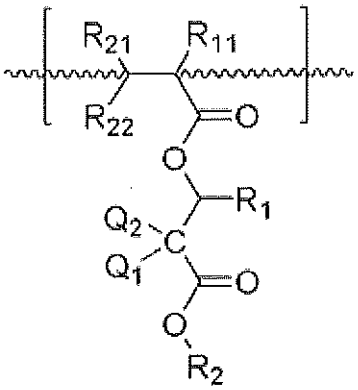

wherein R_{11}, R_{21} and R_{22} each independently represent any one selected from the group consisting of a hydrogen atom, a halogen atom, an alkyl group having 1 to 8 carbon atoms, and a halogenated alkyl group having 1 to 5 carbon atoms;

R_1 represents ~~any one selected from the group consisting of~~ an alkyl group~~, a heteroalkyl group, an aryl group, a heteroaryl group, a cycloalkyl group, a heterocycloalkyl group, an alkyl ether group, and an alkylcarbonyl group~~;

R_2 represents any one selected from the group consisting of a hydrogen atom and an alkyl group having 1 to 5 carbon atoms; and

Q_1 and Q_2 each independently represent a halogen atom;

[Formula 4-a] [Formula 5-a]

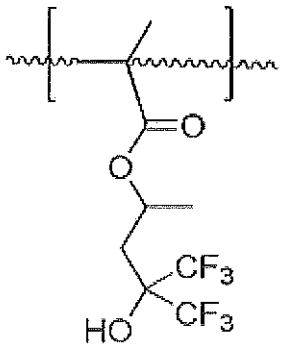

[Formula 6-a]

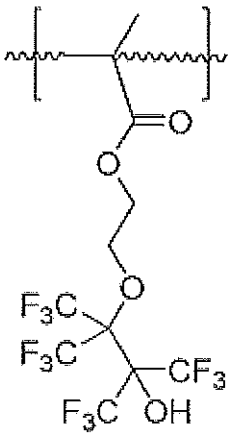

[Formula 7-a]

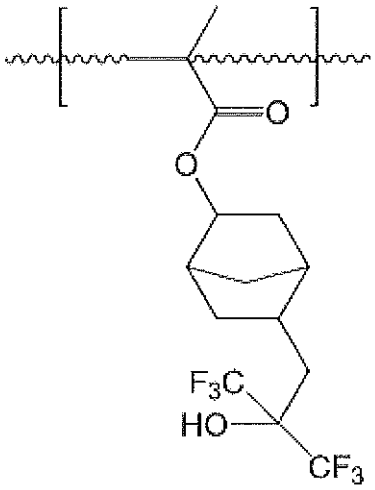

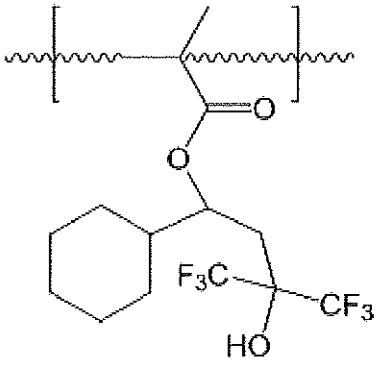

;

wherein the molar proportion m of the repeating unit represented by the formula (1-a) is $0.01 \leq m \leq 0.6$, the molar proportion l of the repeating unit selected from the group consisting of the following formula (4-a), formula (5-a), formula (6-a), formula (7-a), and combinations thereof is $0.4 \leq l \leq 0.99$, and the sum of m and l is 1.

2. The resist protective film composition according to claim 1, wherein the copolymer has a weight average molecular weight as measured by gel permeation chromatography of 1,000 to 500,000 g/mol.

3. The resist protective film composition according to claim 1, further comprising an alcohol solvent having 4 to 8 carbon atoms.