(12) INTERNATIONAL APPLICATION PUBLISHED UNDER THE PATENT COOPERATION TREATY (PCT)

(19) World Intellectual Property Organization
International Bureau

(43) International Publication Date
3 February 2005 (03.02.2005)

PCT

(10) International Publication Number
WO 2005/009616 A1

(51) International Patent Classification[7]: B01L 3/00

(21) International Application Number:
PCT/SG2004/000223

(22) International Filing Date: 29 July 2004 (29.07.2004)

(25) Filing Language: English

(26) Publication Language: English

(30) Priority Data:
10/631,478 31 July 2003 (31.07.2003) US

(71) Applicants *(for all designated States except US)*: **AGENCY FOR SCIENCE TECHNOLOGY AND RESEARCH** [SG/SG]; _20 BIOPOLIS WAY,, #07-01 centros, Singapore 138668 (SG). **NATIONAL UNIVERSITY OF SINGAPORE** [SG/SG]; 10 Kent Ridge Crescent, Singapore 119620 (SG).

(72) Inventors; and

(75) Inventors/Applicants *(for US only)*: **SAMPER, Victor** [GB/SG]; 45 Hindhede Walk #10-01, Springdale, Singapore 587978 (SG). **CONG, Lin** [CN/SG]; Blk 223C, Compassvale Walk, #13-667, Singapore 543223 (SG). **JI Hongmiao** [CN/US]; Blk 291B, Bukit Batok St 24, #10-39, Singapore 651291 (US).

(74) Agent: **VIERING, JENTSHURA & PARTNER**; P.O. Box 1088, Rochor Post Office, Singapore 911833 (SG).

(81) Designated States *(unless otherwise indicated, for every kind of national protection available)*: AE, AG, AL, AM, AT, AU, AZ, BA, BB, BG, BR, BW, BY, BZ, CA, CH, CN, CO, CR, CU, CZ, DE, DK, DM, DZ, EC, EE, EG, ES, FI, GB, GD, GE, GH, GM, HR, HU, ID, IL, IN, IS, JP, KE, KG, KP, KR, KZ, LC, LK, LR, LS, LT, LU, LV, MA, MD, MG, MK, MN, MW, MX, MZ, NA, NI, NO, NZ, OM, PG, PH, PL, PT, RO, RU, SC, SD, SE, SG, SK, SL, SY, TJ, TM,

[Continued on next page]

(54) Title: MICROFLUIDICS PACKAGES AND METHODS OF USING SAME

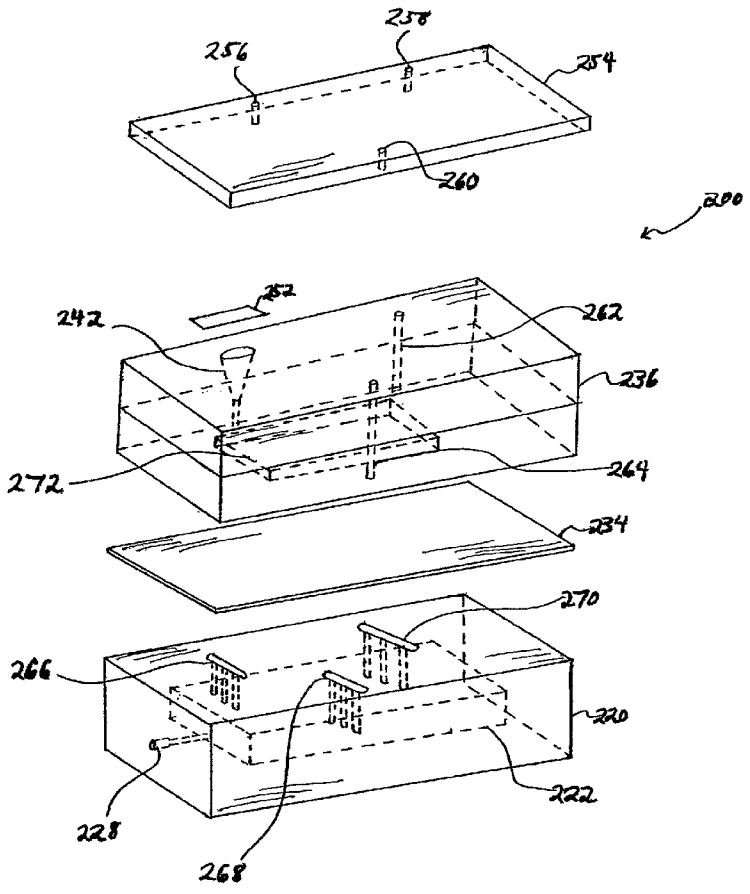

(57) Abstract: Microfluidics packages and methods of use are described, comprising in one embodiment a substrate having a top surface and means to lower pressure on the top surface; a fluidics card having a bottom surface and means to allow fluids to traverse through the card; and a polymeric barrier film, the polymeric barrier film positioned between the top surface of the substrate and the bottom surface of the fluidics card.

WO 2005/009616 A1

TN, TR, TT, TZ, UA, UG, US, UZ, VC, VN, YU, ZA, ZM, ZW.

(84) **Designated States** *(unless otherwise indicated, for every kind of regional protection available)*: ARIPO (BW, GH, GM, KE, LS, MW, MZ, NA, SD, SL, SZ, TZ, UG, ZM, ZW), Eurasian (AM, AZ, BY, KG, KZ, MD, RU, TJ, TM), European (AT, BE, BG, CH, CY, CZ, DE, DK, EE, ES, FI, FR, GB, GR, HU, IE, IT, LU, MC, NL, PL, PT, RO, SE, SI, SK, TR), OAPI (BF, BJ, CF, CG, CI, CM, GA, GN, GQ, GW, ML, MR, NE, SN, TD, TG).

Published:
— *with international search report*

For two-letter codes and other abbreviations, refer to the "Guidance Notes on Codes and Abbreviations" appearing at the beginning of each regular issue of the PCT Gazette.