(12) INTERNATIONAL APPLICATION PUBLISHED UNDER THE PATENT COOPERATION TREATY (PCT)

(19) World Intellectual Property Organization
International Bureau

(43) International Publication Date
2 October 2008 (02.10.2008)

PCT

(10) International Publication Number
WO 2008/116656 A1

(51) International Patent Classification:
B05B 11/00 (2006.01)

(21) International Application Number:
PCT/EP2008/002434

(22) International Filing Date: 25 March 2008 (25.03.2008)

(25) Filing Language: English

(26) Publication Language: English

(30) Priority Data:
07006107.2 24 March 2007 (24.03.2007) EP

(71) Applicant *(for all designated States except US)*: **AFA POLYTEK B.V.** [NL/NL]; Grasbeemd 1, NL-5705 DE HELMOND (NL).

(72) Inventors; and

(75) Inventors/Applicants *(for US only)*: **MAAS, Wilhelmus Johannes Joseph** [NL/NL]; Grebbe 24, NL-5711 KV SOMEREN (NL). **HURKMANS, Petrus Lambertus Wilhelmus** [NL/NL]; Meidoornstraat 20, NL-5712 NR SOMEREN (NL).

(74) Agent: **BARTELDS, Eric**; ARNOLD + SIEDSMA, Sweelinckplein 1, NL-2517 GK THE HAGUE (NL).

(81) Designated States *(unless otherwise indicated, for every kind of national protection available)*: AE, AG, AL, AM, AO, AT, AU, AZ, BA, BB, BG, BH, BR, BW, BY, BZ, CA, CH, CN, CO, CR, CU, CZ, DE, DK, DM, DO, DZ, EC, EE, EG, ES, FI, GB, GD, GE, GH, GM, GT, HN, HR, HU, ID, IL, IN, IS, JP, KE, KG, KM, KN, KP, KR, KZ, LA, LC, LK, LR, LS, LT, LU, LY, MA, MD, ME, MG, MK, MN, MW, MX, MY, MZ, NA, NG, NI, NO, NZ, OM, PG, PH, PL, PT, RO, RS, RU, SC, SD, SE, SG, SK, SL, SM, SV, SY, TJ, TM, TN, TR, TT, TZ, UA, UG, US, UZ, VC, VN, ZA, ZM, ZW.

(84) Designated States *(unless otherwise indicated, for every kind of regional protection available)*: ARIPO (BW, GH, GM, KE, LS, MW, MZ, NA, SD, SL, SZ, TZ, UG, ZM, ZW), Eurasian (AM, AZ, BY, KG, KZ, MD, RU, TJ, TM), European (AT, BE, BG, CH, CY, CZ, DE, DK, EE, ES, FI, FR, GB, GR, HR, HU, IE, IS, IT, LT, LU, LV, MC, MT, NL, NO, PL, PT, RO, SE, SI, SK, TR), OAPI (BF, BJ, CF, CG, CI, CM, GA, GN, GQ, GW, ML, MR, NE, SN, TD, TG).

Published:
— *with international search report*

(54) **Title:** LIQUID DISPENSING DEVICE WITH A DIAPHRAGM VALVE AND METHOD OF ASSEMBLING THE VALVE

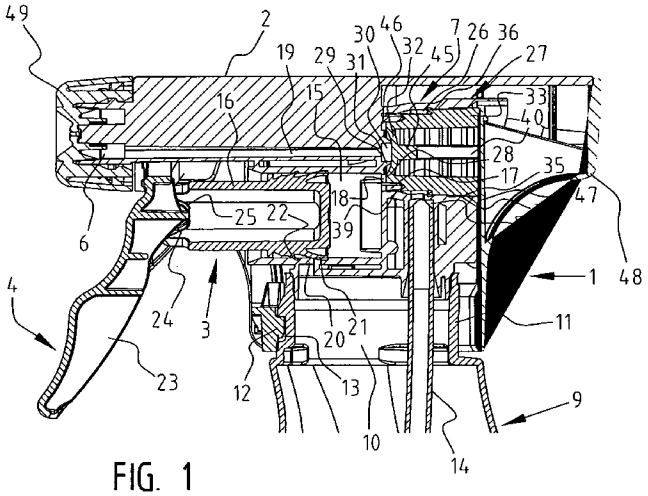

FIG. 1

(57) **Abstract:** The invention relates to a precompression system (7) for a liquid dispensing device (1), which prevents liquid from being discharged until a predetermined pressure has been built up. The precompression system comprises a pump (3) for drawing liquid through an inlet (5) and discharging it through an outlet (6) and a precompression valve disposed between the pump and the outlet. The precompression valve allows liquid in the pump (3) to reach the outlet (6) only after the predetermined pressure is established. The precompression valve comprises an elastic diaphragm (32) normally closing the valve opening (30) and including a concave surface (32a) facing the valve opening (30) and in fluid communication with the pump and a convex surface in fluid communication with atmospheric pressure. The elastic diaphragm (32) may be stretched around a valve seat (31). The invention further relates to a method of assembling such a precompression system in a liquid dispensing device.

WO 2008/116656 A1