(12) INTERNATIONAL APPLICATION PUBLISHED UNDER THE PATENT COOPERATION TREATY (PCT)

(19) World Intellectual Property Organization
International Bureau

(43) International Publication Date
20 March 2008 (20.03.2008)

PCT

(10) International Publication Number
WO 2008/033107 A2

(51) International Patent Classification:
C10L 3/00 (2006.01) *F02B 43/04* (2006.01)
H05B 3/82 (2006.01) *F02C 1/06* (2006.01)

(21) International Application Number:
PCT/SG2007/000313

(22) International Filing Date:
13 September 2007 (13.09.2007)

(25) Filing Language: English

(26) Publication Language: English

(30) Priority Data:
200606177-4 13 September 2006 (13.09.2006) SG
200702442-5 4 April 2007 (04.04.2007) SG

(71) Applicant and
(72) Inventor: **MOK, Siong Cheak, Steven** [MY/SG]; Blk 682C Jurong West Central 1, #09-130, Singapore 643682 (SG).

(74) Agent: **ENGLISH, Matthew**; Lloyd Wise, Tanjong Pagar, P.O. Box 636, Singapore 910816 (SG).

(81) Designated States *(unless otherwise indicated, for every kind of national protection available)*: AE, AG, AL, AM, AT, AU, AZ, BA, BB, BG, BH, BR, BW, BY, BZ, CA, CH, CN, CO, CR, CU, CZ, DE, DK, DM, DO, DZ, EC, EE, EG, ES, FI, GB, GD, GE, GH, GM, GT, HN, HR, HU, ID, IL, IN, IS, JP, KE, KG, KM, KN, KP, KR, KZ, LA, LC, LK, LR, LS, LT, LU, LY, MA, MD, ME, MG, MK, MN, MW, MX, MY, MZ, NA, NG, NI, NO, NZ, OM, PG, PH, PL, PT, RO, RS, RU, SC, SD, SE, SG, SK, SL, SM, SV, SY, TJ, TM, TN, TR, TT, TZ, UA, UG, US, UZ, VC, VN, ZA, ZM, ZW.

(84) Designated States *(unless otherwise indicated, for every kind of regional protection available)*: ARIPO (BW, GH, GM, KE, LS, MW, MZ, NA, SD, SL, SZ, TZ, UG, ZM, ZW), Eurasian (AM, AZ, BY, KG, KZ, MD, RU, TJ, TM), European (AT, BE, BG, CH, CY, CZ, DE, DK, EE, ES, FI, FR, GB, GR, HU, IE, IS, IT, LT, LU, LV, MC, MT, NL, PL, PT, RO, SE, SI, SK, TR), OAPI (BF, BJ, CF, CG, CI, CM, GA, GN, GQ, GW, ML, MR, NE, SN, TD, TG).

Published:
— *without international search report and to be republished upon receipt of that report*

(54) Title: SYSTEM FOR GENERATING BROWN GAS AND USES THEREOF

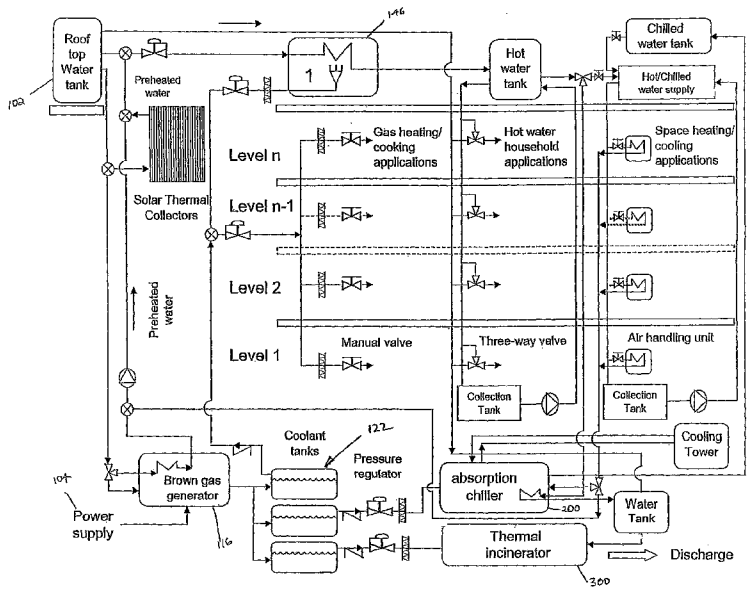

(57) Abstract: A system for the generation, storage and use of Brown gas comprising at least one Brown gas generator (116), in communication with an electricity supply (104) and water supply (102); at least one first storage chamber (122), in fluid communication with the generator, for storing the Brown gas generated from said generator (116); and Brown gas application means (146, 200, 300) in communication with said at least one first storage chamber, wherein said generator and first storage chamber are located proximate the Brown gas application means. For example, the Brown gas may be used for the production of hot water (146), for the production of chilled water (200) and as fuel in an incineration unit (300).

WO 2008/033107 A2