FIG. 1

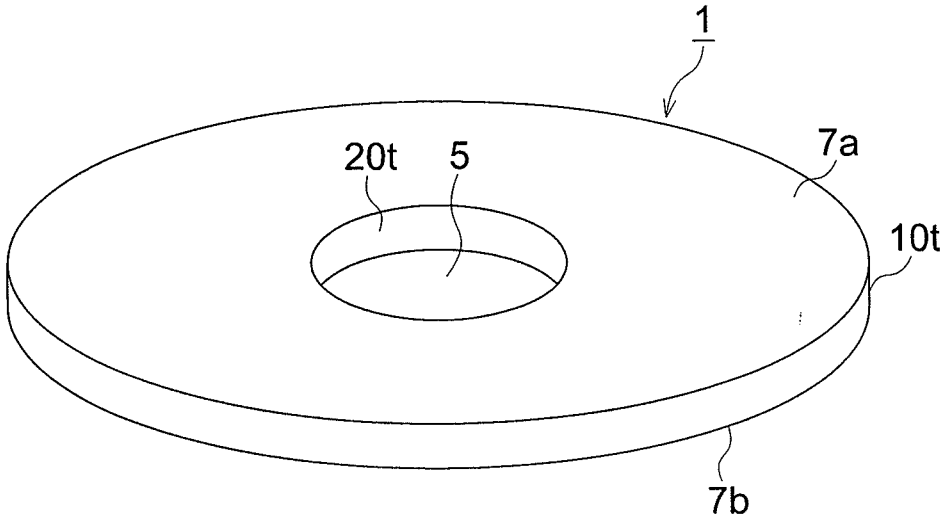

FIG. 2

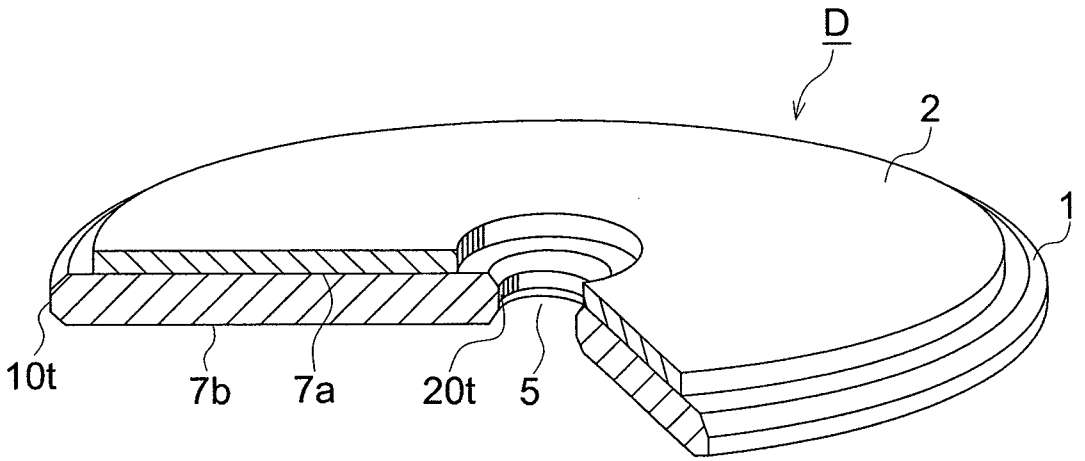

FIG. 3

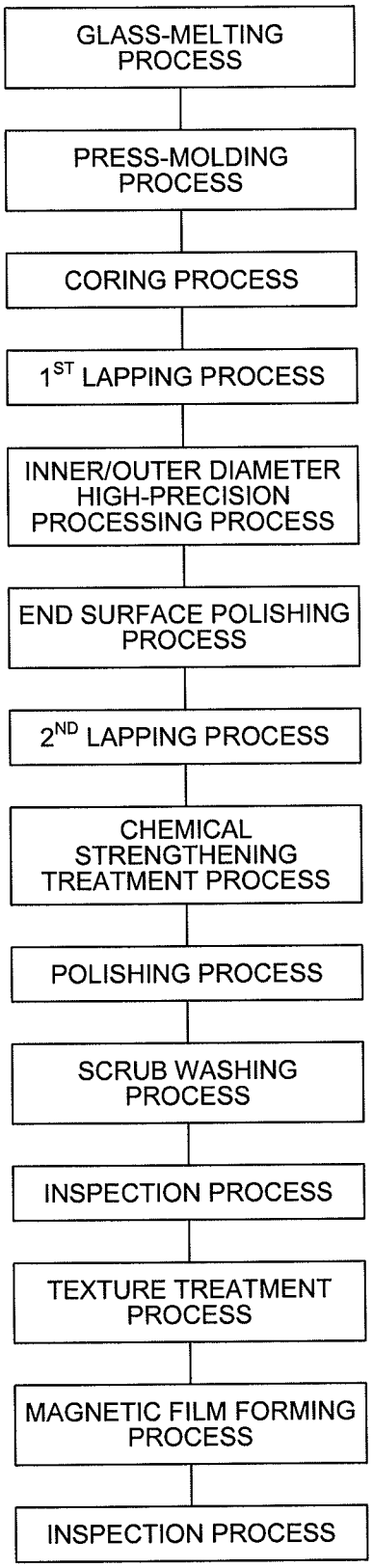
GLASS-MELTING PROCESS
PRESS-MOLDING PROCESS
CORING PROCESS
1ST LAPPING PROCESS
INNER/OUTER DIAMETER HIGH-PRECISION PROCESSING PROCESS
END SURFACE POLISHING PROCESS
2ND LAPPING PROCESS
CHEMICAL STRENGTHENING TREATMENT PROCESS
POLISHING PROCESS
SCRUB WASHING PROCESS
INSPECTION PROCESS
TEXTURE TREATMENT PROCESS
MAGNETIC FILM FORMING PROCESS
INSPECTION PROCESS

FIG. 4

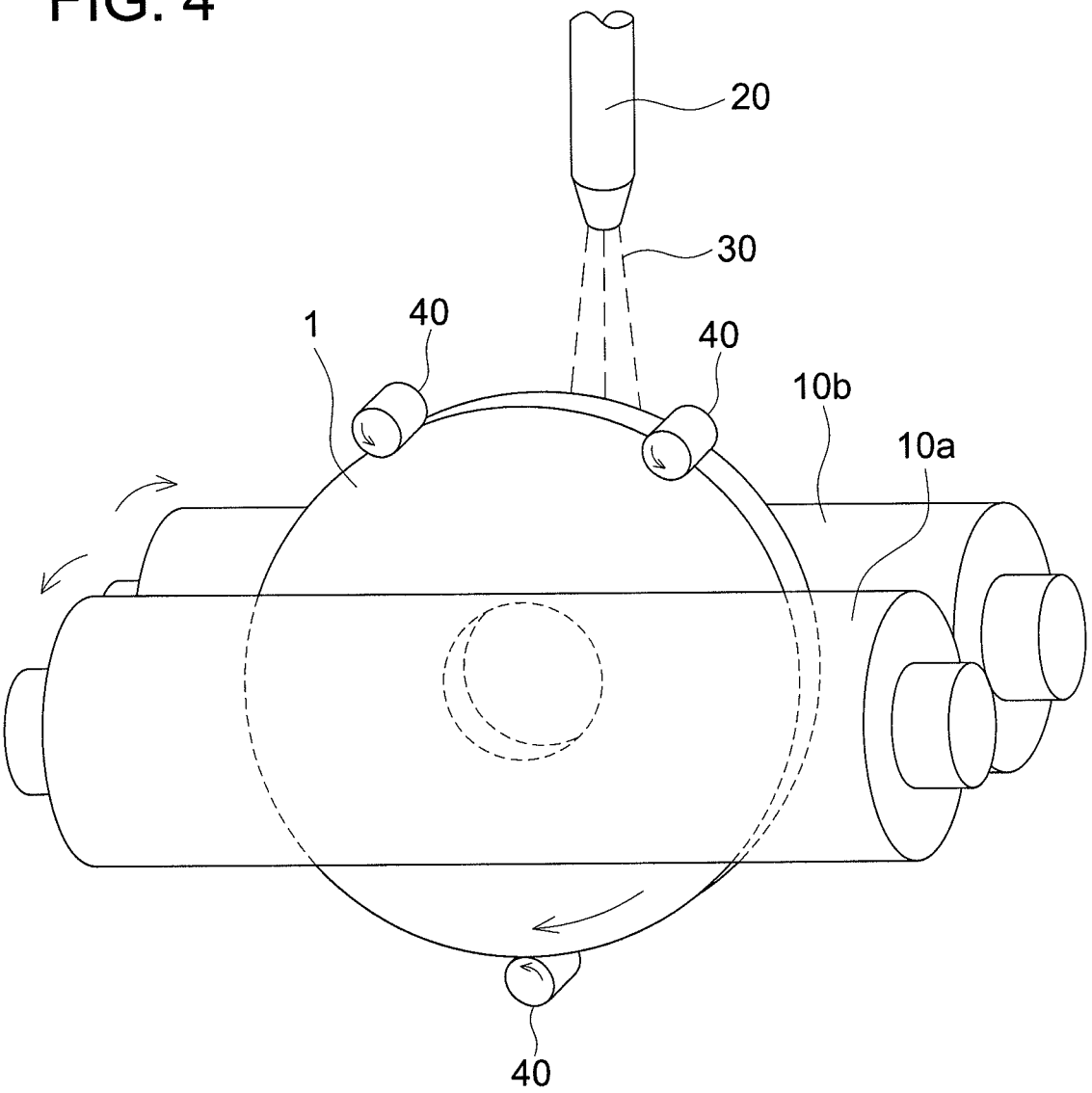

FIG. 5

