FIG.1

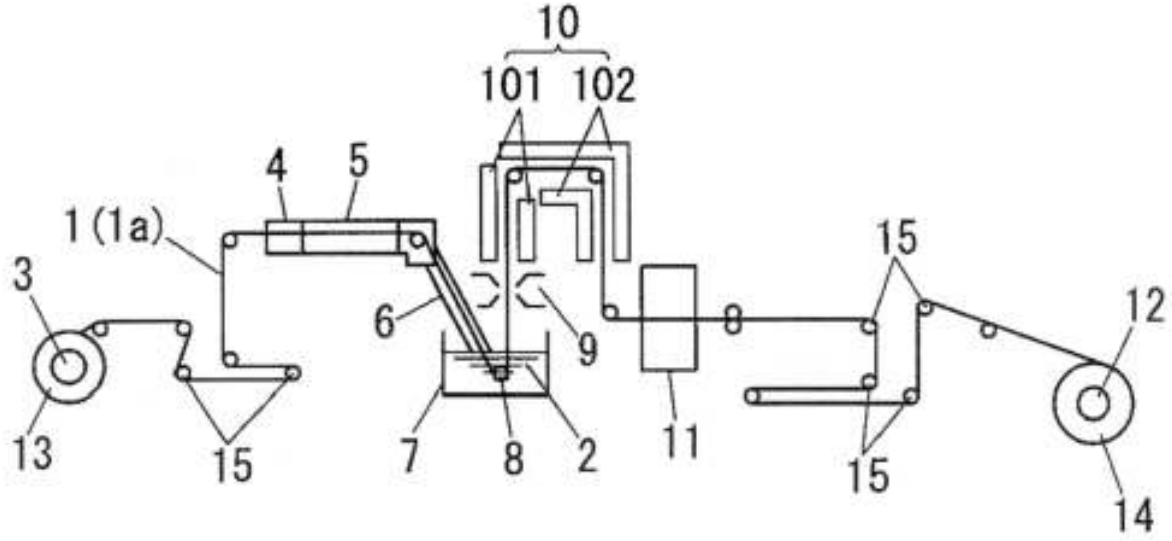

FIG.2

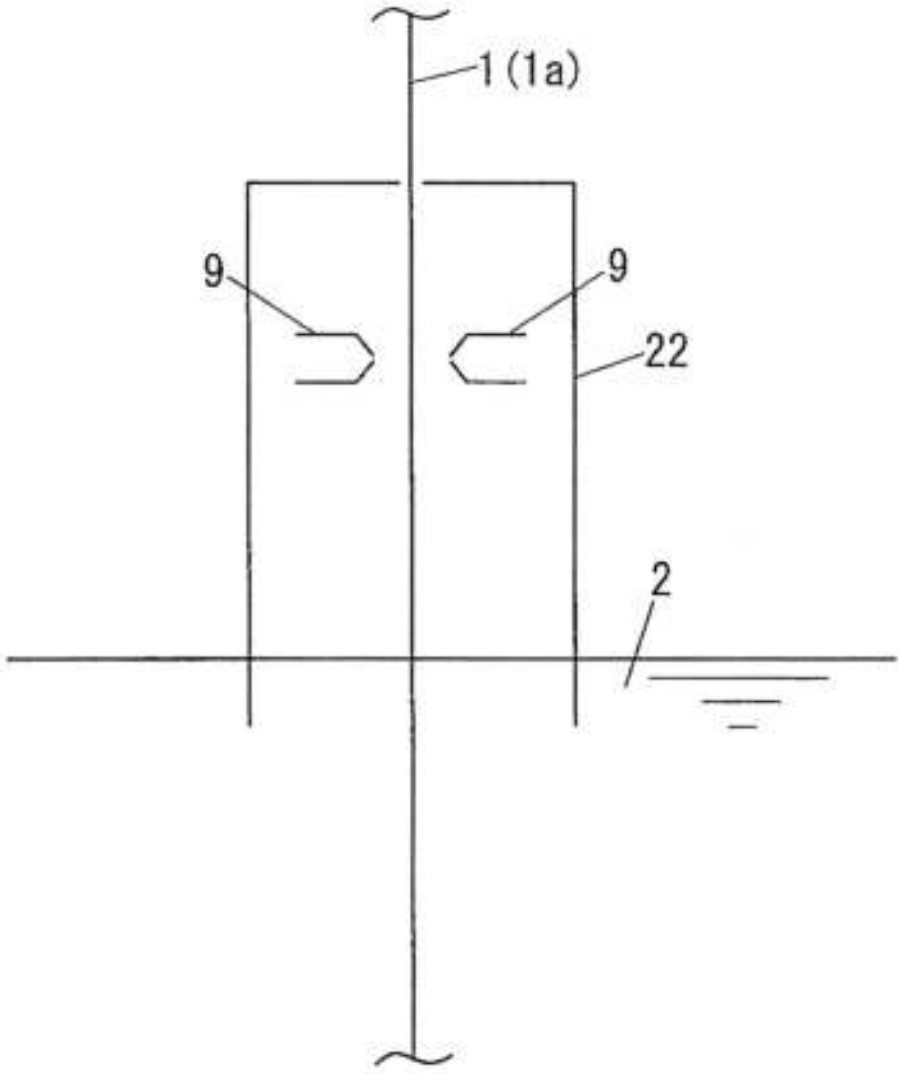

FIG.3

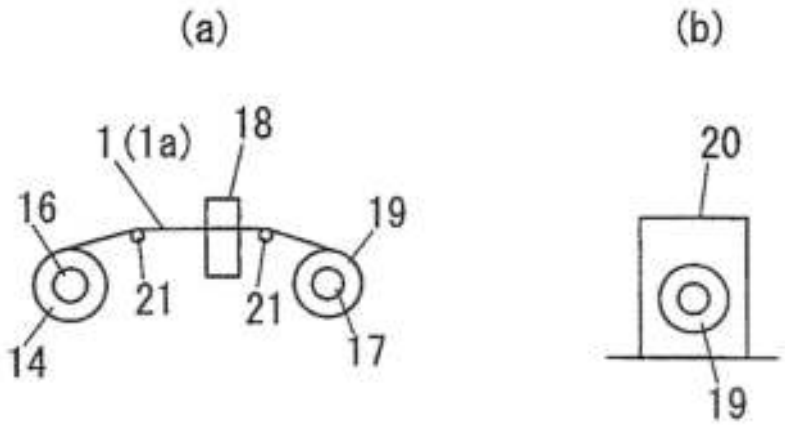
(a)
(b)
1 (1a)
18
16
19
21
21
14
17
20
19

FIG.4

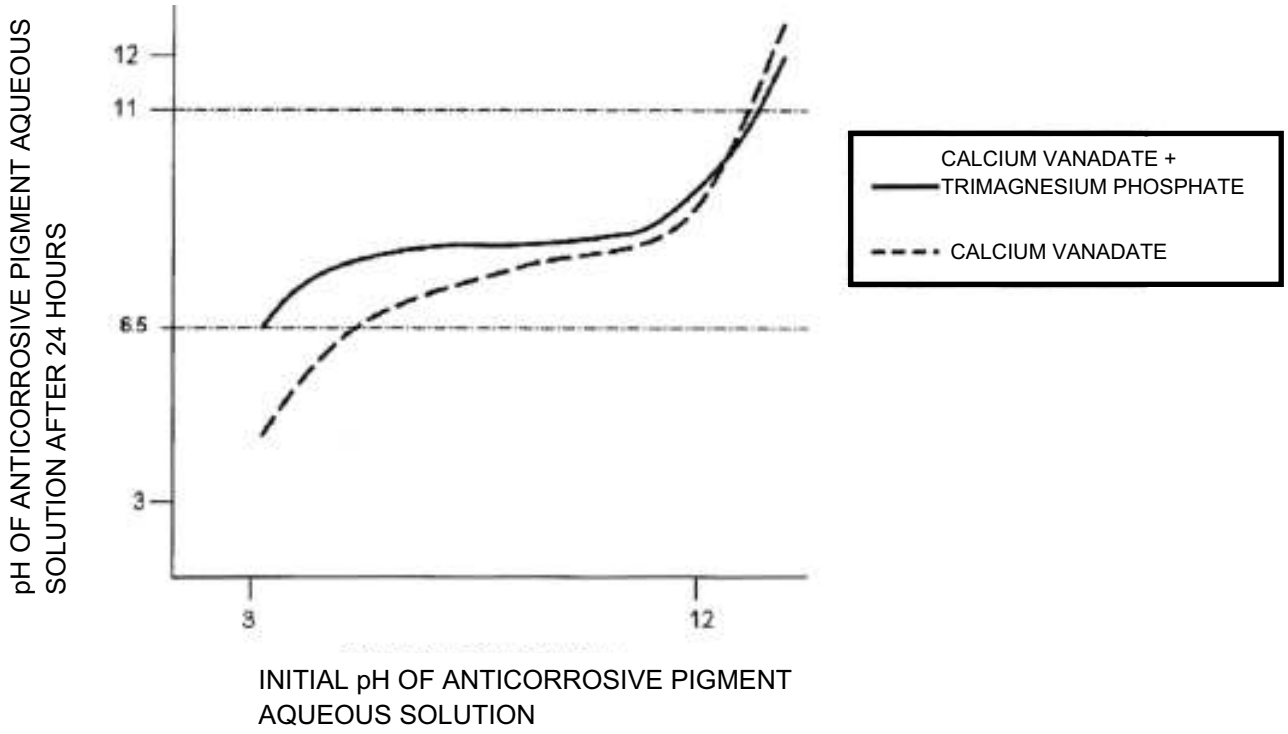
pH OF ANTICORROSIVE PIGMENT AQUEOUS SOLUTION AFTER 24 HOURS
12
11
6.5
3
3
12
INITIAL pH OF ANTICORROSIVE PIGMENT AQUEOUS SOLUTION
CALCIUM VANADATE + TRIMAGNESIUM PHOSPHATE
CALCIUM VANADATE