(12) INTERNATIONAL APPLICATION PUBLISHED UNDER THE PATENT COOPERATION TREATY (PCT)

(19) World Intellectual Property Organization
International Bureau

(43) International Publication Date
13 April 2006 (13.04.2006)

PCT

(10) International Publication Number
WO 2006/038749 A1

(51) International Patent Classification[7]: B63C 3/04

(21) International Application Number:
PCT/KR2005/000001

(22) International Filing Date: 3 January 2005 (03.01.2005)

(25) Filing Language: English

(26) Publication Language: English

(30) Priority Data:
10-2004-0080633 8 October 2004 (08.10.2004) KR

(71) Applicant *(for all designated States except US)*: **HYUNDAI HEAVY INDUSTRIES CO., LTD.** [KR/KR]; 1, Jeonha-dong, Dong-ku, Ulsan 682-792 (KR).

(72) Inventors; and

(75) Inventors/Applicants *(for US only)*: **YANG, Young-Tae** [KR/KR]; 62-70, JungKok-4 Dong, KwangJin-Gu, Seoul 143-887 (KR). **CHOI, Moon-Gil** [KR/KR]; 445-11, Sinjung3-Dong, Nam-Ku, ULSAN 680-823 (KR). **YOON, Ki-Young** [KR/KR]; Samsung Raemian Apt. 406-1201, Yaksa-Dong, Jung-Ku, Ulsan 681-762 (KR). **LEE, Choon-Bo** [KR/KR]; Hyundai Beach Apt. 105-1901, Bangeo-Dong, Dong-Ku, Ulsan 682-760 (KR). **BAE, Suk-Ho** [KR/KR]; Seobu 2Cha Apt. 205-104, Seobu-Dong, Dong-Ku, Ulsan 682-807 (KR). **KWON, Jin-Suk** [KR/KR]; Dosung Apt. 7-202, Ok-Dong, Nam-Ku, Ulsan 680-778 (KR).

(74) Agents: **CHANG, Soon-Boo** et al.; B-812, Woolim Lion's Valley, 371-28, Gasan-Dong, Geumcheon-Gu, Seoul 153-023 (KR).

(81) Designated States *(unless otherwise indicated, for every kind of national protection available)*: AE, AG, AL, AM, AT, AU, AZ, BA, BB, BG, BR, BW, BY, BZ, CA, CH, CN, CO, CR, CU, CZ, DE, DK, DM, DZ, EC, EE, EG, ES, FI, GB, GD, GE, GH, GM, HR, HU, ID, IL, IN, IS, JP, KE, KG, KP, KZ, LC, LK, LR, LS, LT, LU, LV, MA, MD, MG, MK, MN, MW, MX, MZ, NA, NI, NO, NZ, OM, PG, PH, PL, PT, RO, RU, SC, SD, SE, SG, SK, SL, SM, SY, TJ, TM, TN, TR, TT, TZ, UA, UG, US, UZ, VC, VN, YU, ZA, ZM, ZW.

(84) Designated States *(unless otherwise indicated, for every kind of regional protection available)*: ARIPO (BW, GH, GM, KE, LS, MW, MZ, NA, SD, SL, SZ, TZ, UG, ZM, ZW), Eurasian (AM, AZ, BY, KG, KZ, MD, RU, TJ, TM), European (AT, BE, BG, CH, CY, CZ, DE, DK, EE, ES, FI, FR, GB, GR, HU, IE, IS, IT, LT, LU, MC, NL, PL, PT, RO, SE, SI, SK, TR), OAPI (BF, BJ, CF, CG, CI, CM, GA, GN, GQ, GW, ML, MR, NE, SN, TD, TG).

Published:
— *with international search report*

[Continued on next page]

(54) **Title:** METHOD AND EQUIPMENT FOR TRANSVERSELY LAUNCHING SHIP BUILT ON THE GROUND

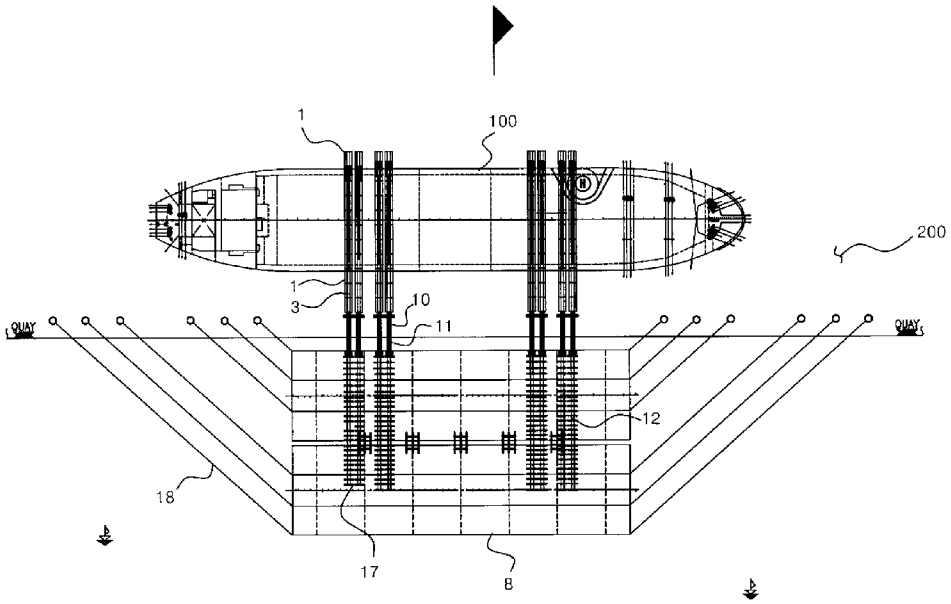

(57) **Abstract:** A method and the equipment for transversely launching a ship built on the ground are disclosed. The method comprises a ship building step for building a ship on the ground; a preliminary Jacking-Up step for lifting up the built ship by means of a plurality of skid shoes and hydraulic jacks; a ship moving step for skidding the skid shoes and hydraulic jacks which support the ship on skid beams using traction devices, thereby transversely moving the ship toward a barge; a ship loading step for loading the moved ship onto the barge; and a ship launching step for floating the ship by submerging the barge on which the ship is loaded.

WO 2006/038749 A1

For two-letter codes and other abbreviations, refer to the "Guidance Notes on Codes and Abbreviations" appearing at the beginning of each regular issue of the PCT Gazette.