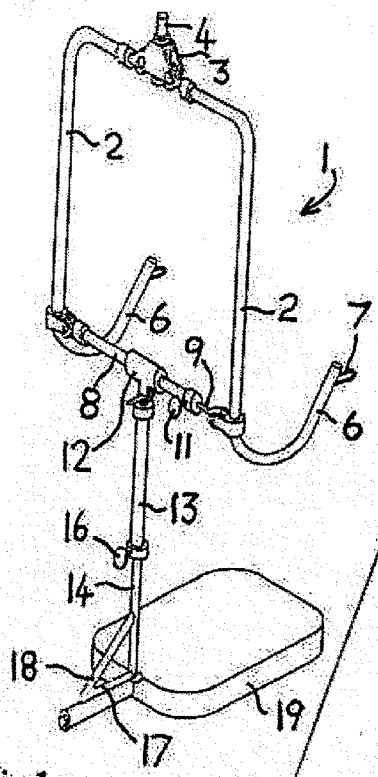

Fig 1

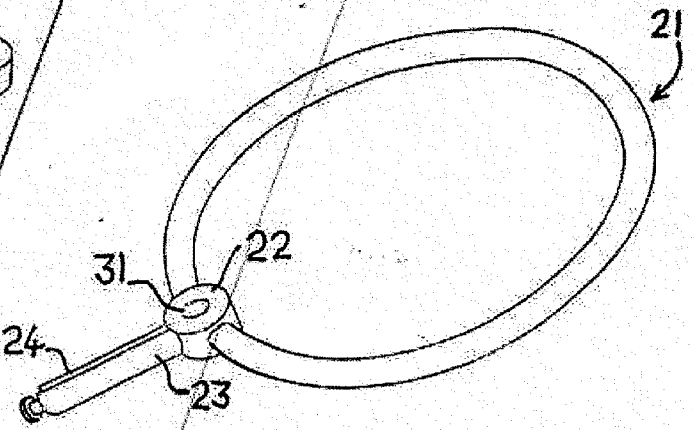

Fig 2

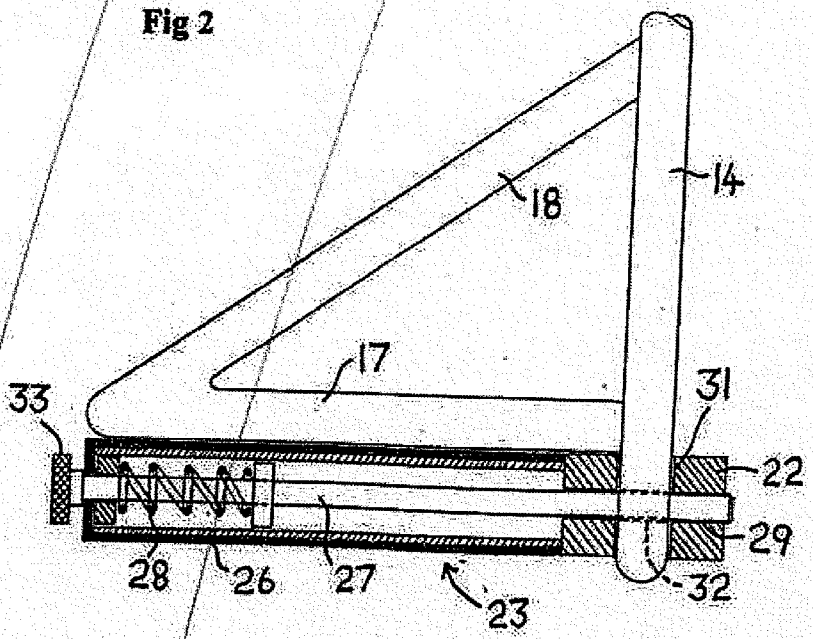

Fig 3

WO 2005/120421 PCT/GB2004/002529

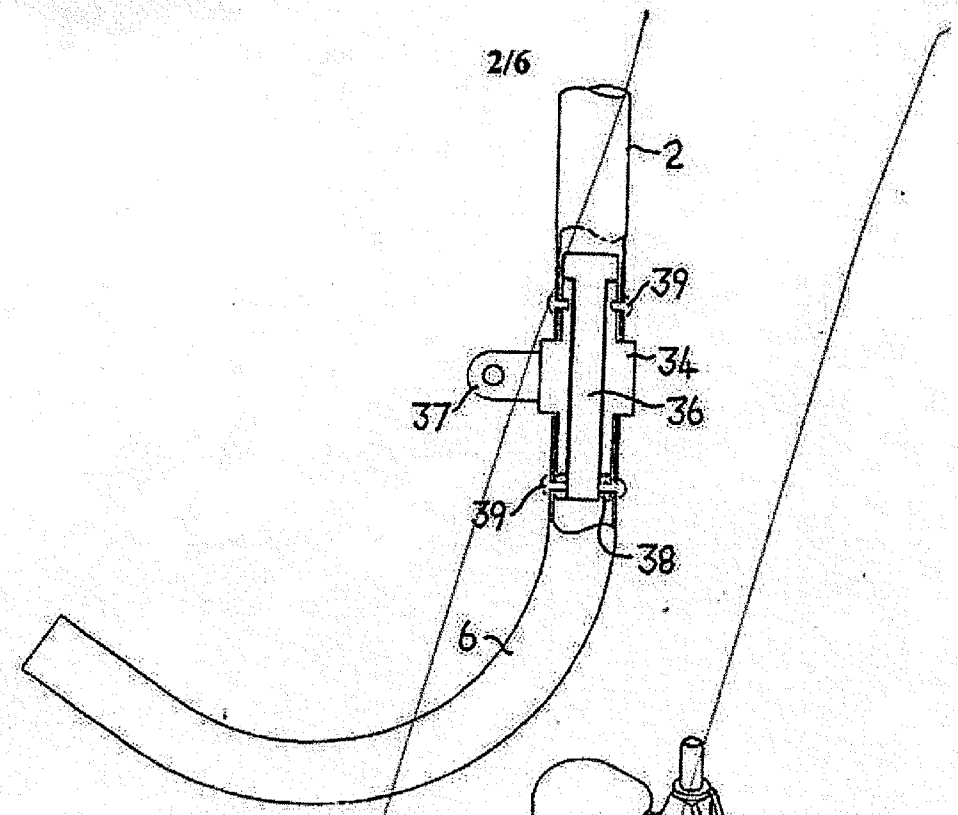

Fig 4

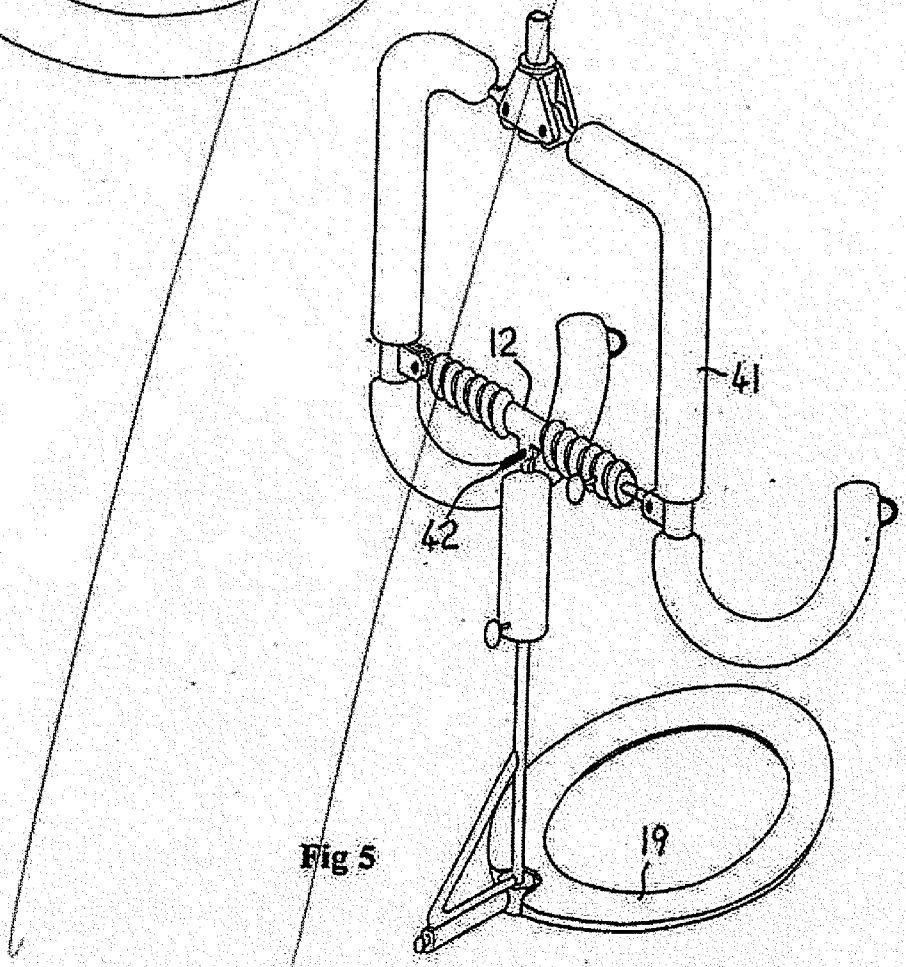

Fig 5

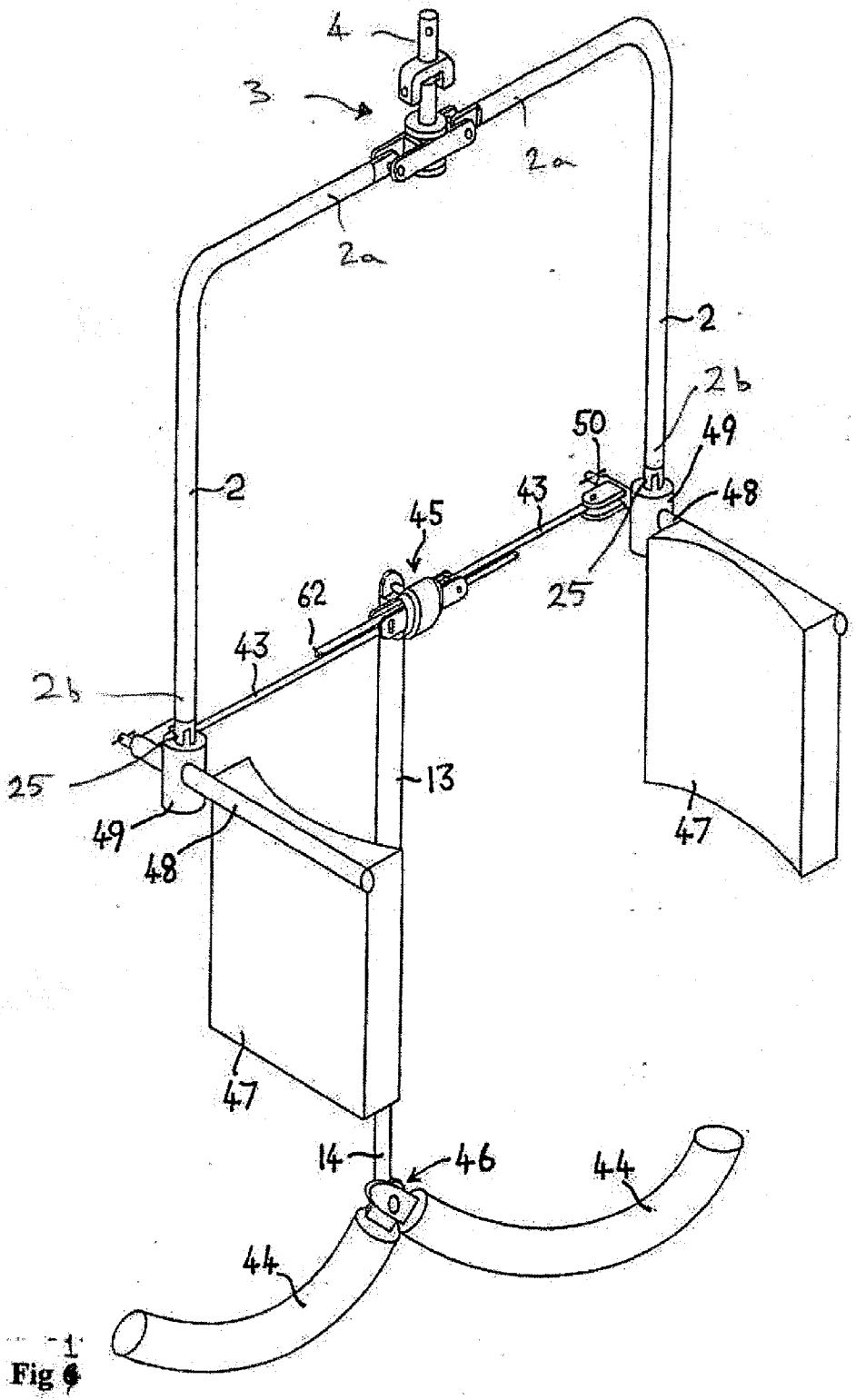

Fig 6

WO 2005/120421 PCT/GB2004/002529

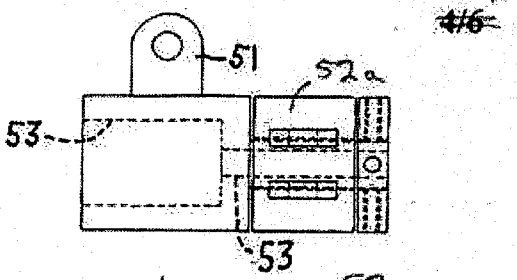

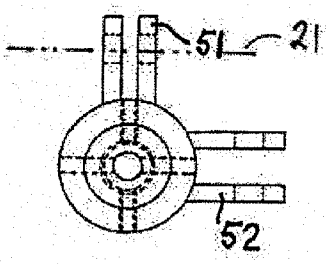

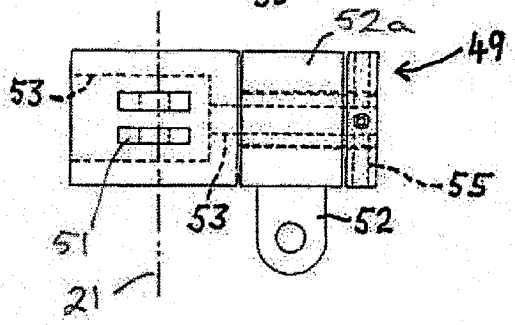

Fig ~~2~~

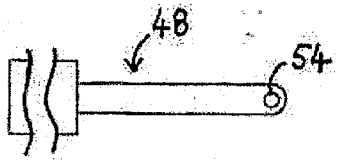





Fig ~~3~~

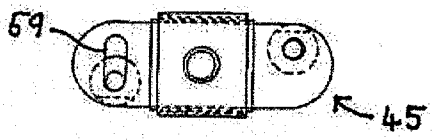

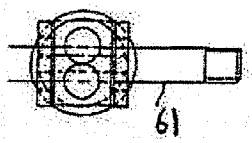

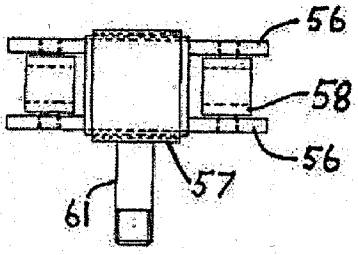

Fig ~~4~~

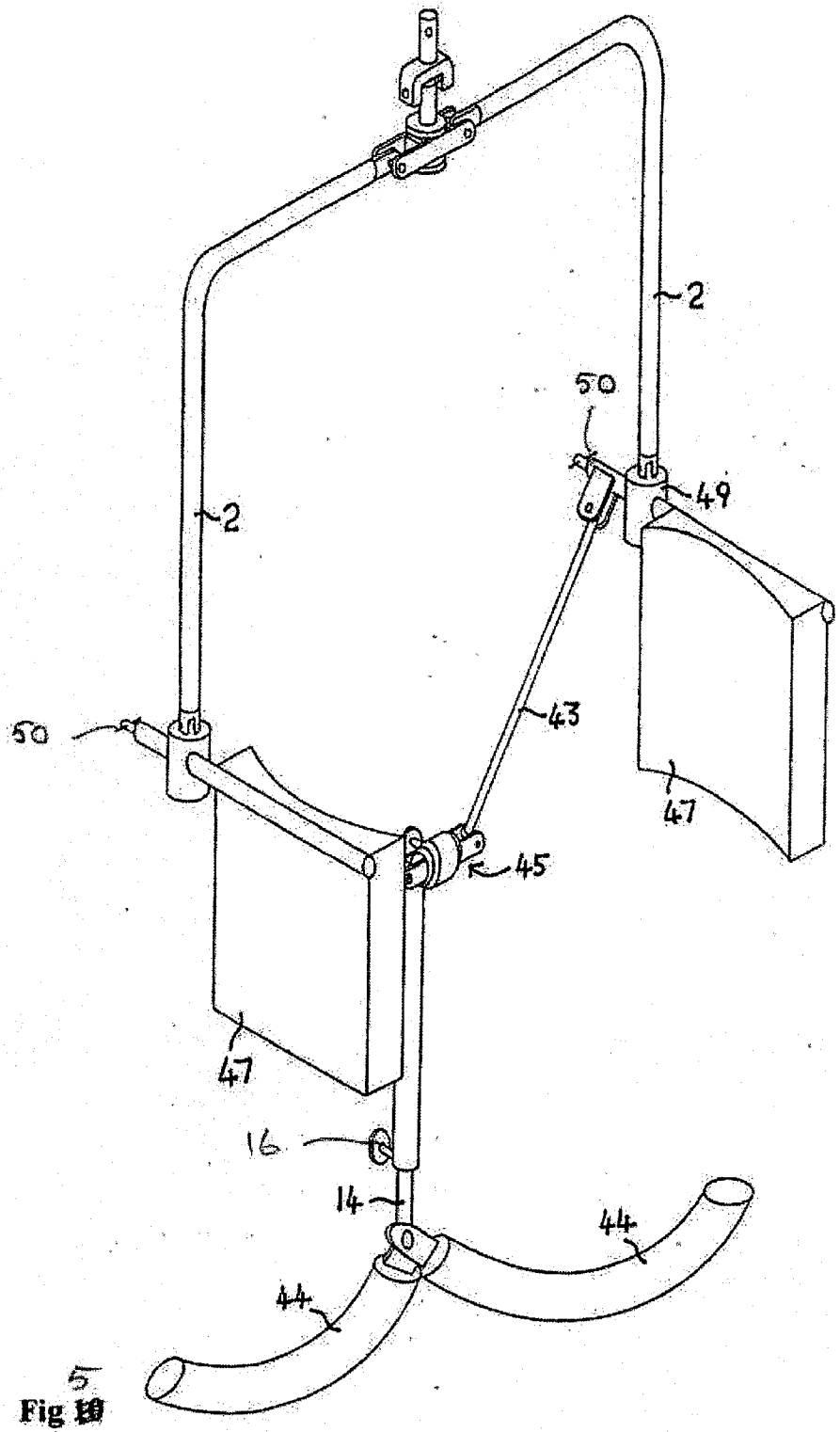

Fig ~~1~~ 5

~~3/3~~ 4/4

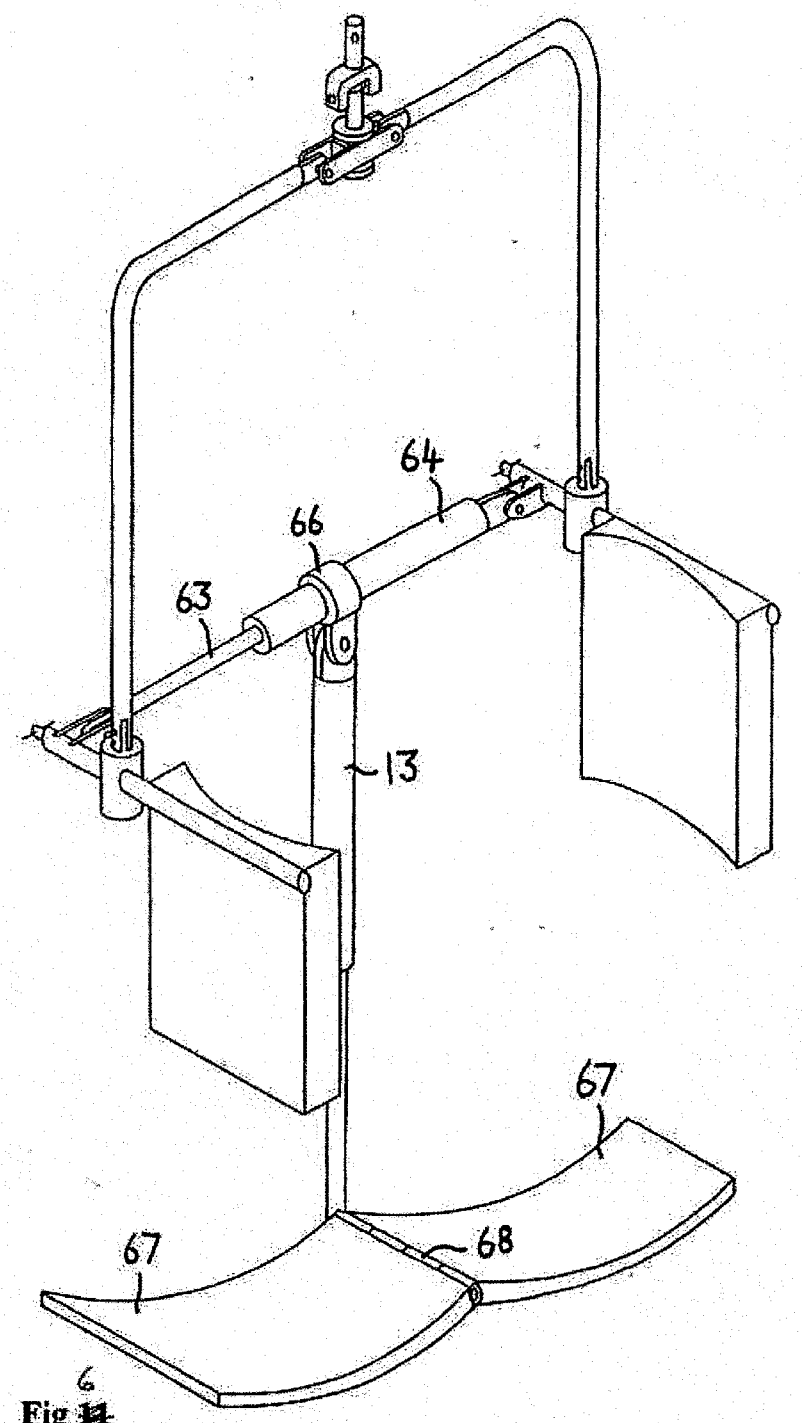

Fig ~~1~~ 6