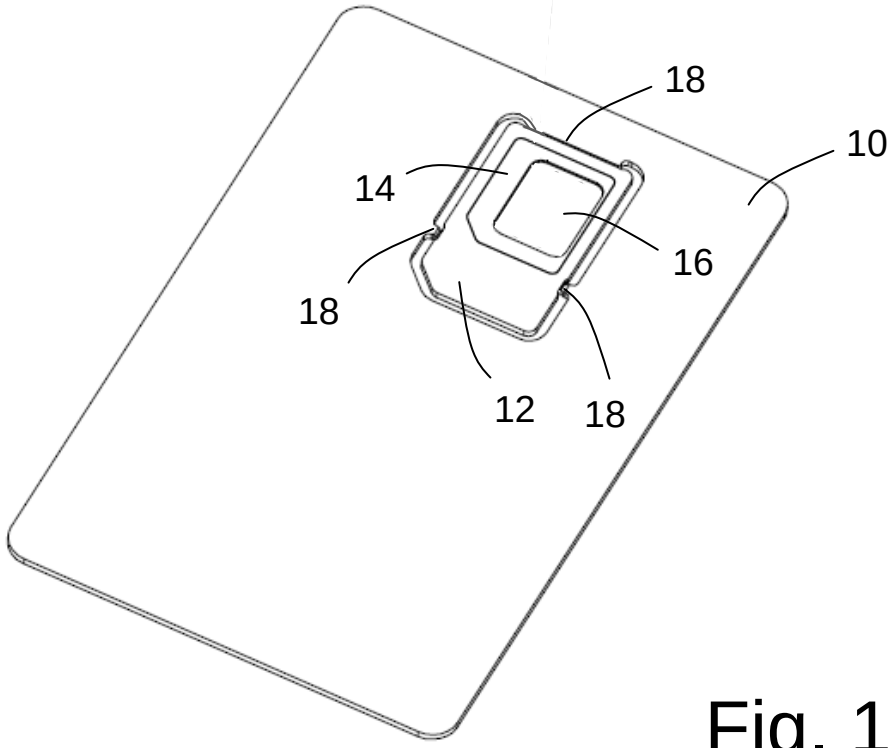

Fig. 1

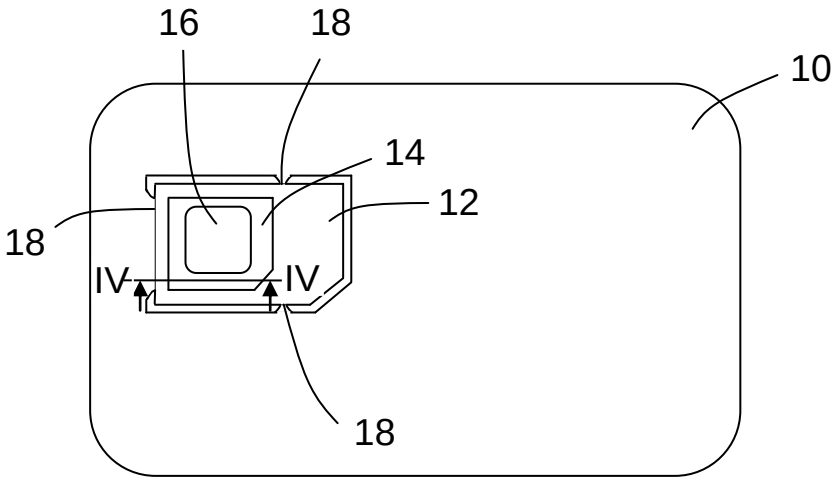

Fig. 2

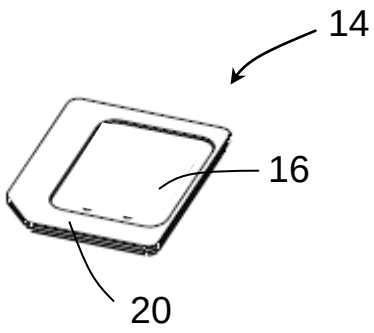

Fig. 3

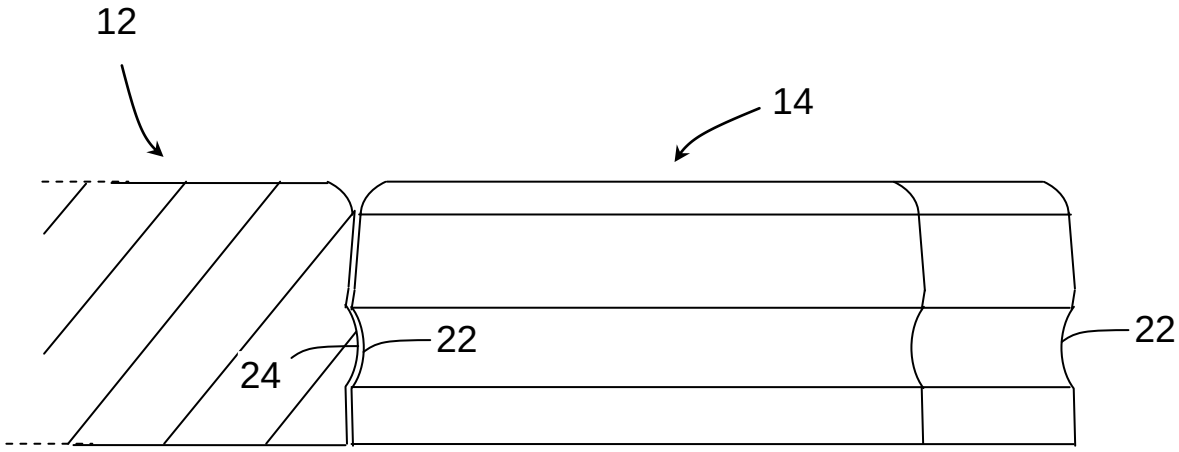

Fig. 4

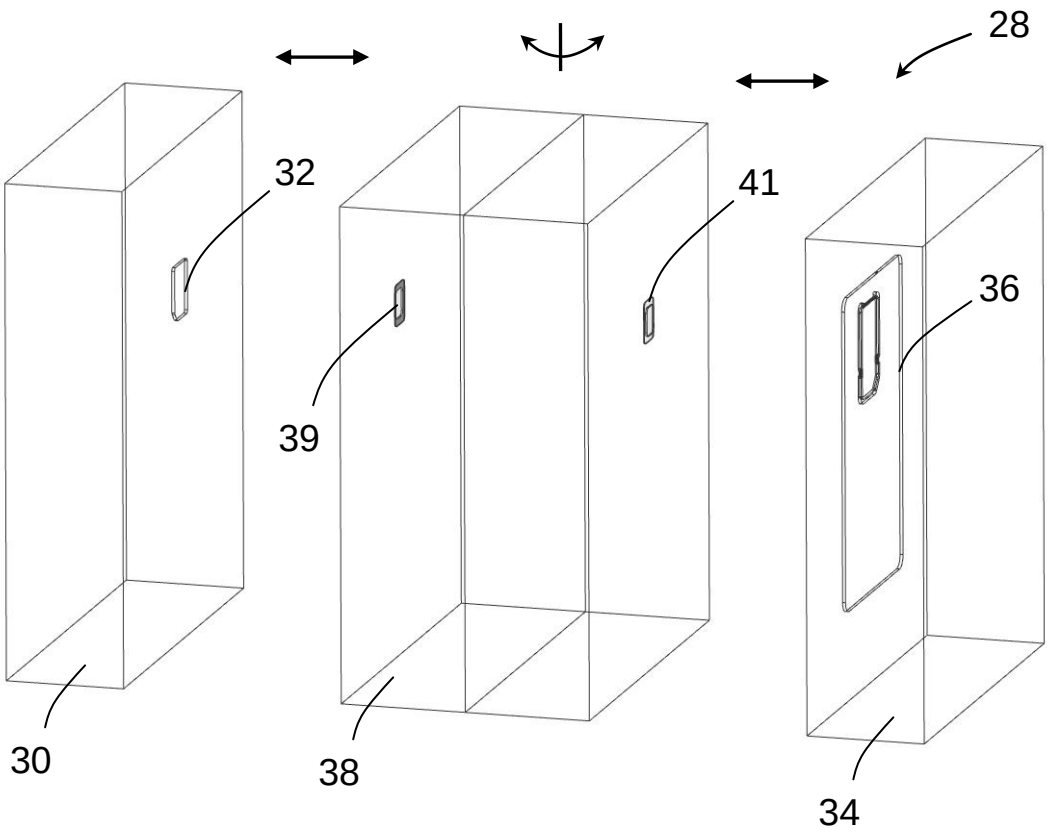

Fig. 5

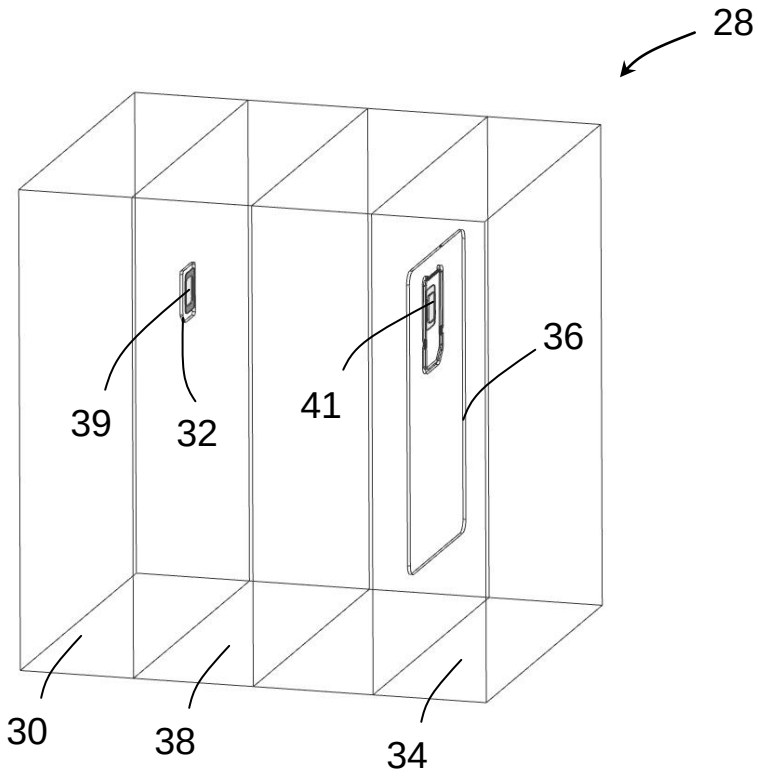

Fig. 6

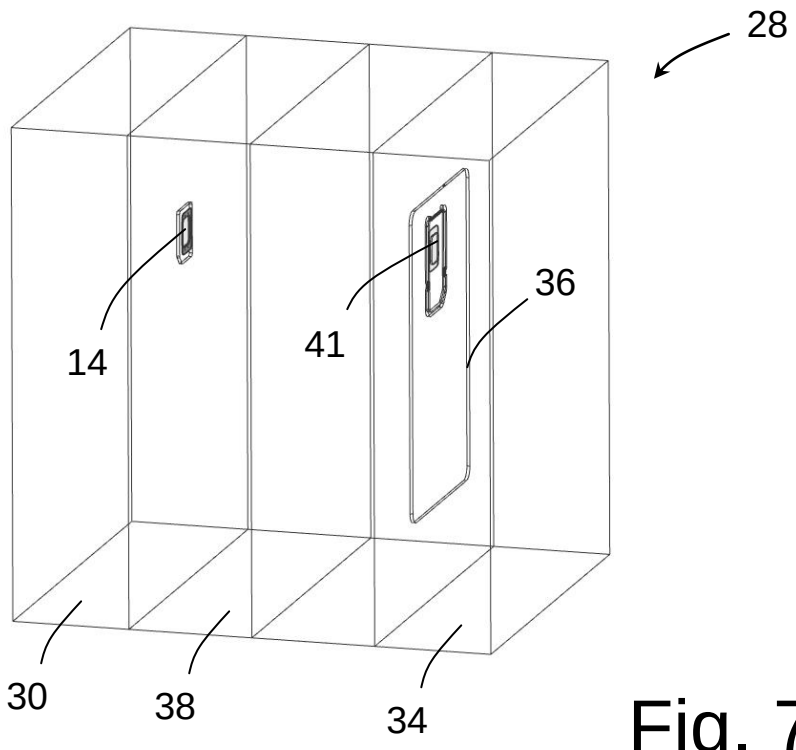

Fig. 7

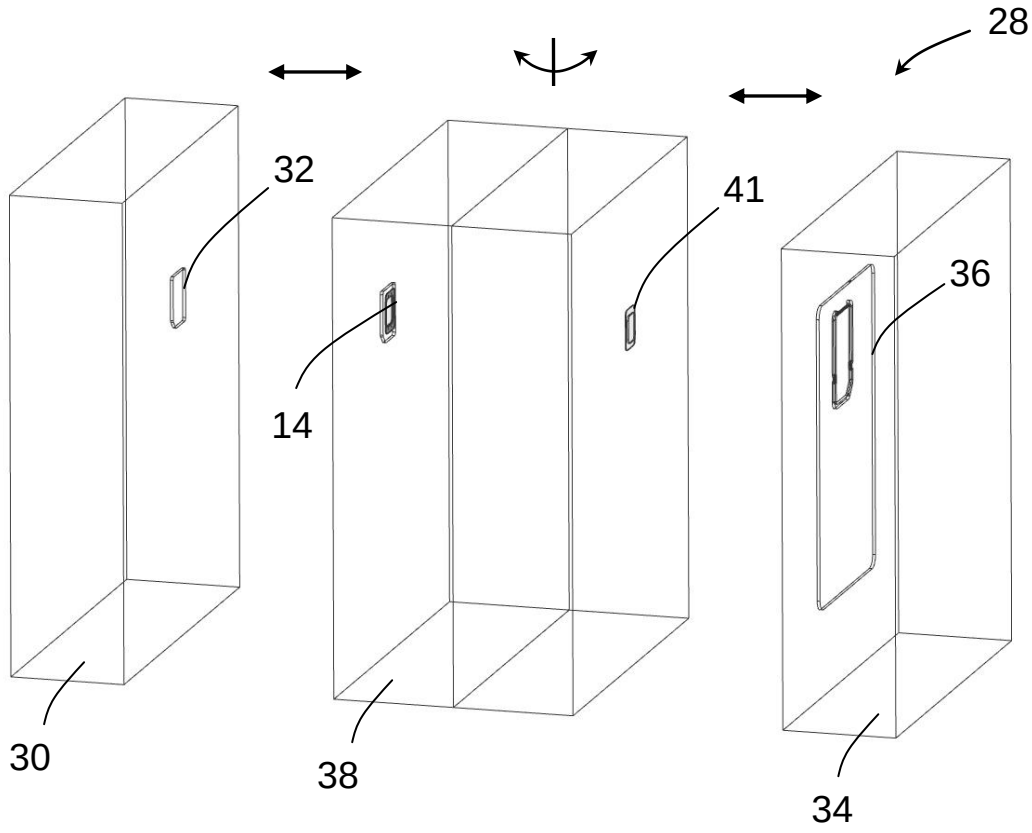

Fig. 8

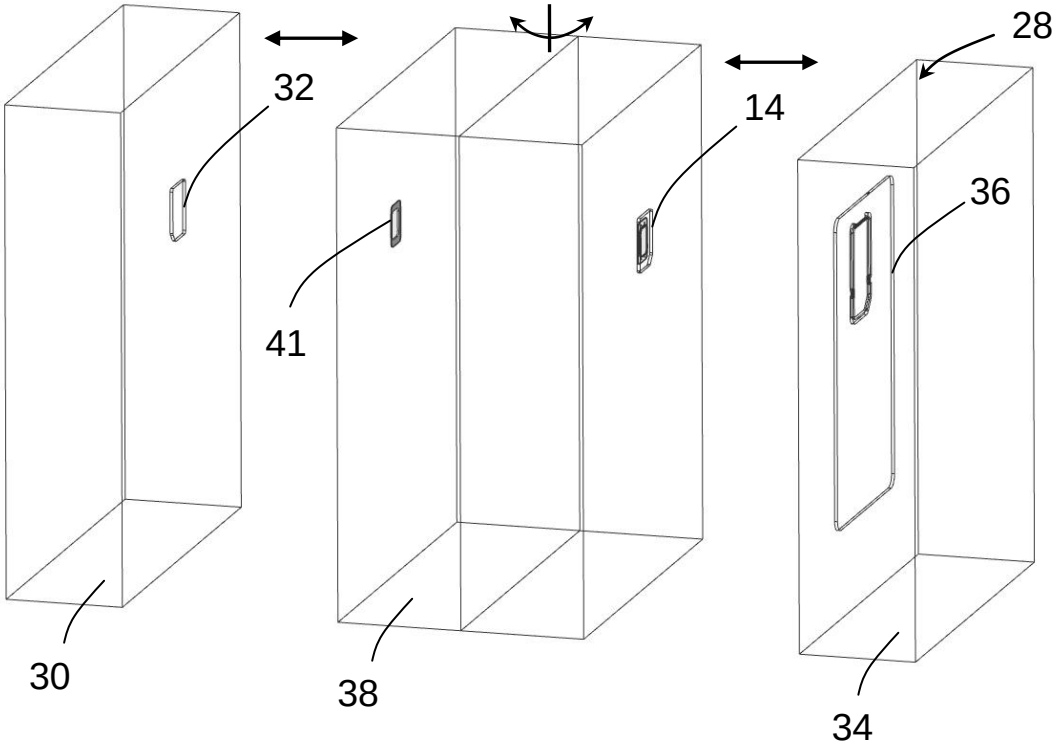

Fig. 9

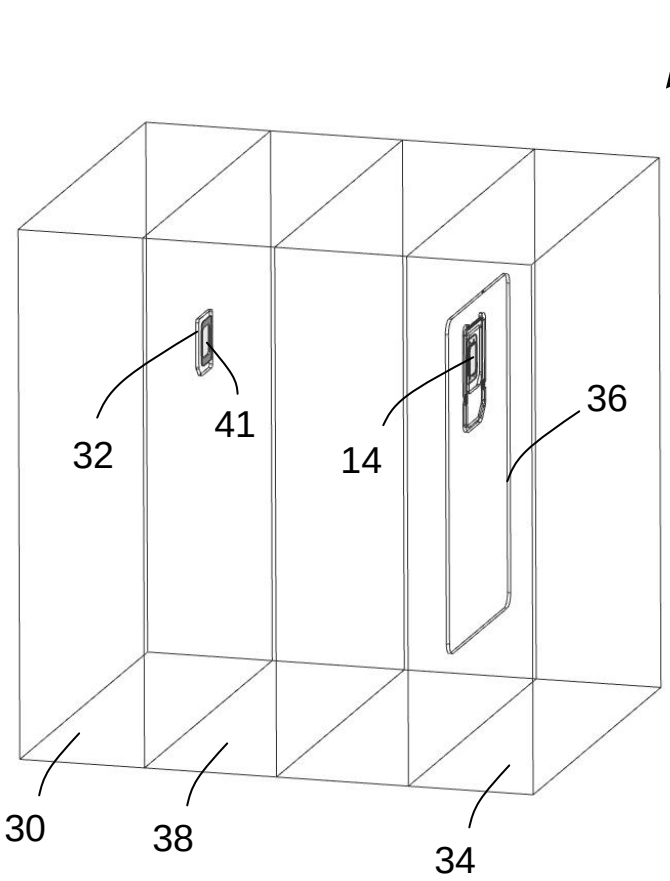

Fig. 10

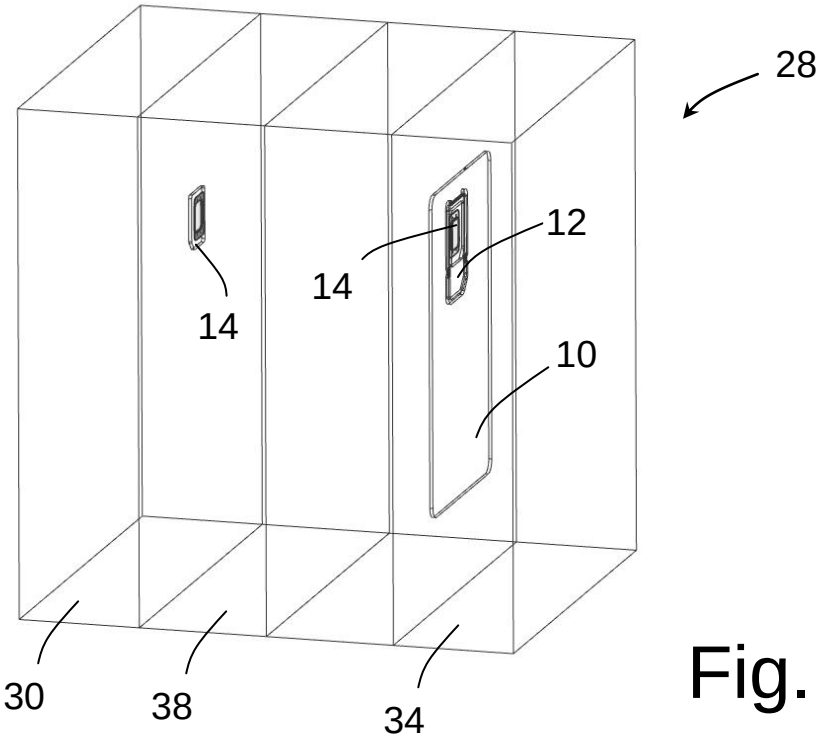

Fig. 11

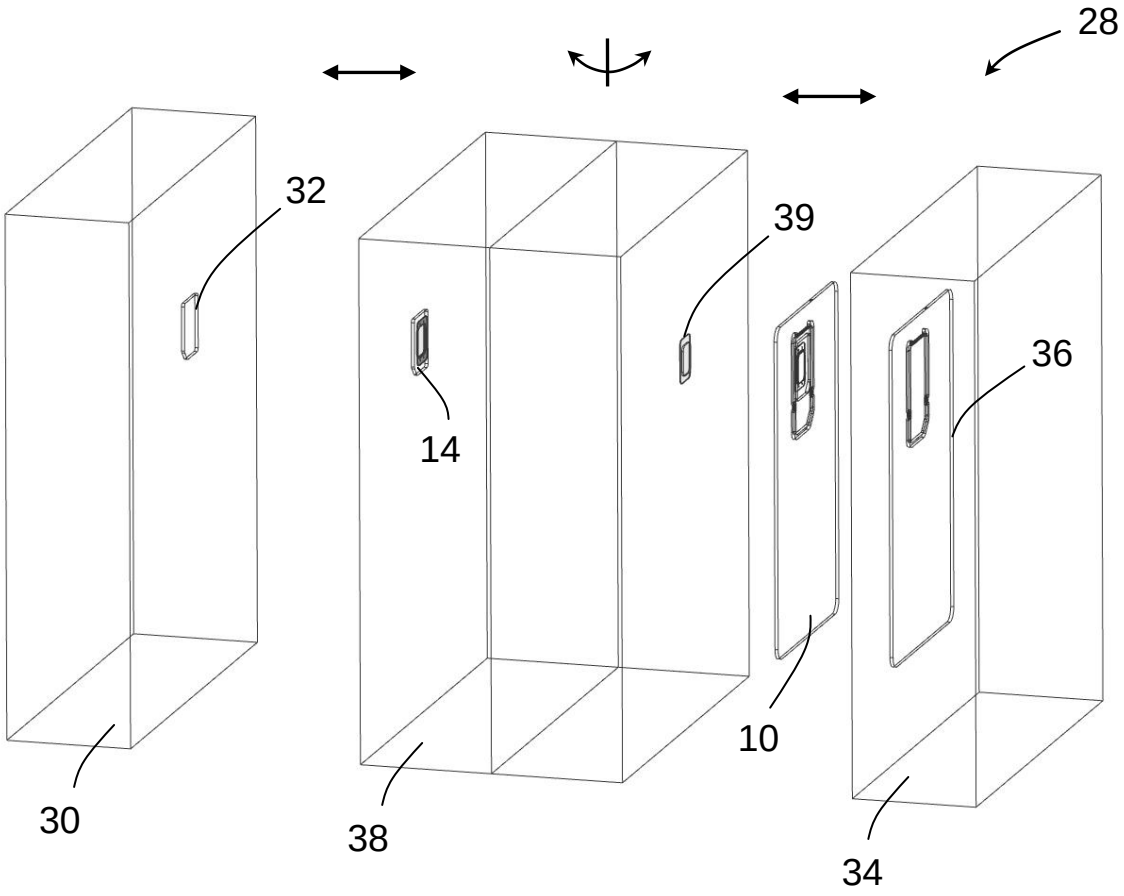

Fig. 12

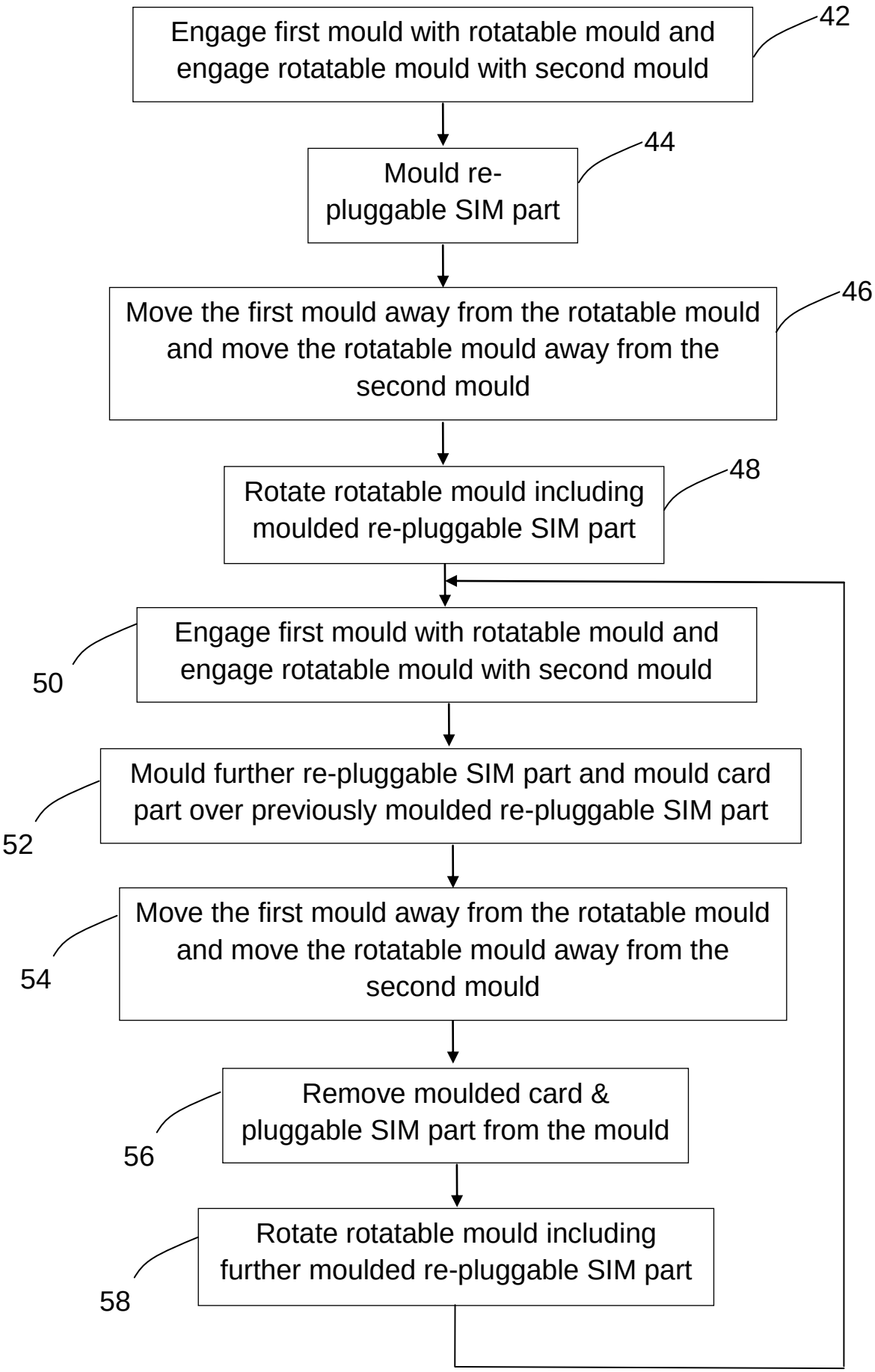
Engage first mould with rotatable mould and engage rotatable mould with second mould
42
Mould re-pluggable SIM part
44
Move the first mould away from the rotatable mould and move the rotatable mould away from the second mould
46
Rotate rotatable mould including moulded re-pluggable SIM part
48
50
Engage first mould with rotatable mould and engage rotatable mould with second mould
52
Mould further re-pluggable SIM part and mould card part over previously moulded re-pluggable SIM part
54
Move the first mould away from the rotatable mould and move the rotatable mould away from the second mould
56
Remove moulded card & pluggable SIM part from the mould
58
Rotate rotatable mould including further moulded re-pluggable SIM part

Fig. 13