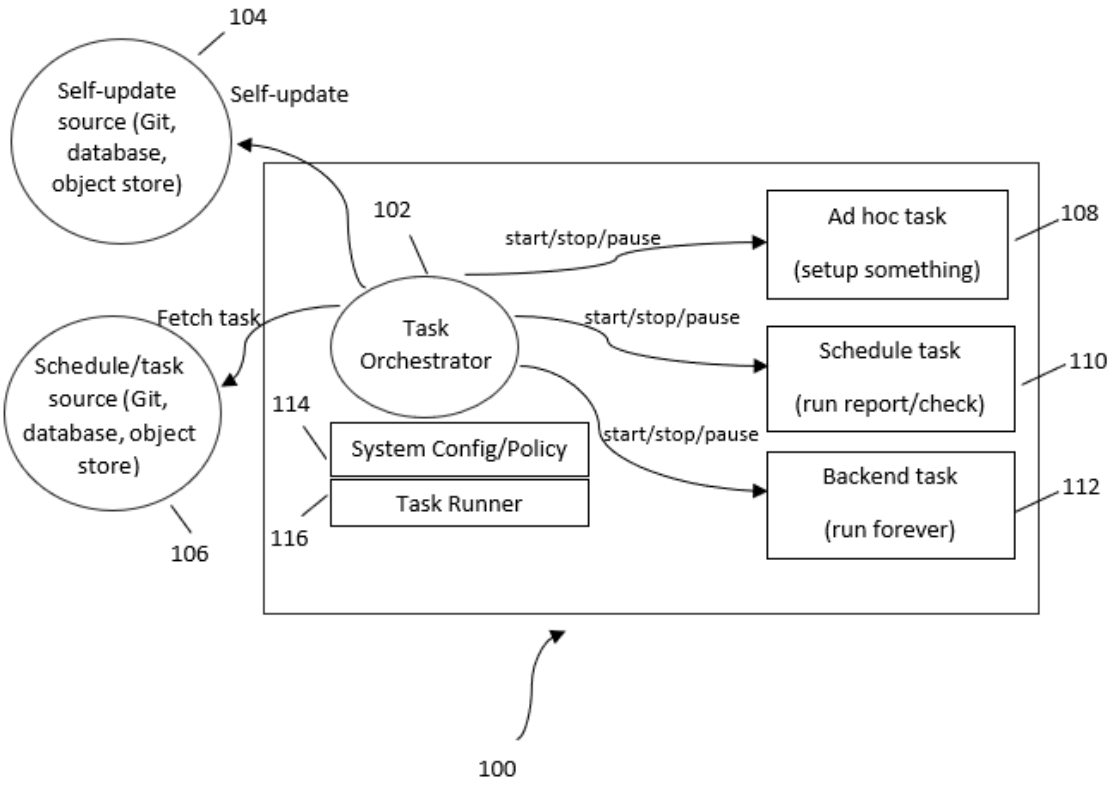
104
Self-update source (Git, database, object store)
Self-update
102
start/stop/pause
Ad hoc task
(setup something)
108
Fetch task
Task Orchestrator
start/stop/pause
Schedule task
(run report/check)
110
Schedule/task source (Git, database, object store)
114
System Config/Policy
start/stop/pause
Backend task
(run forever)
112
Task Runner
116
106
100

FIG. 1

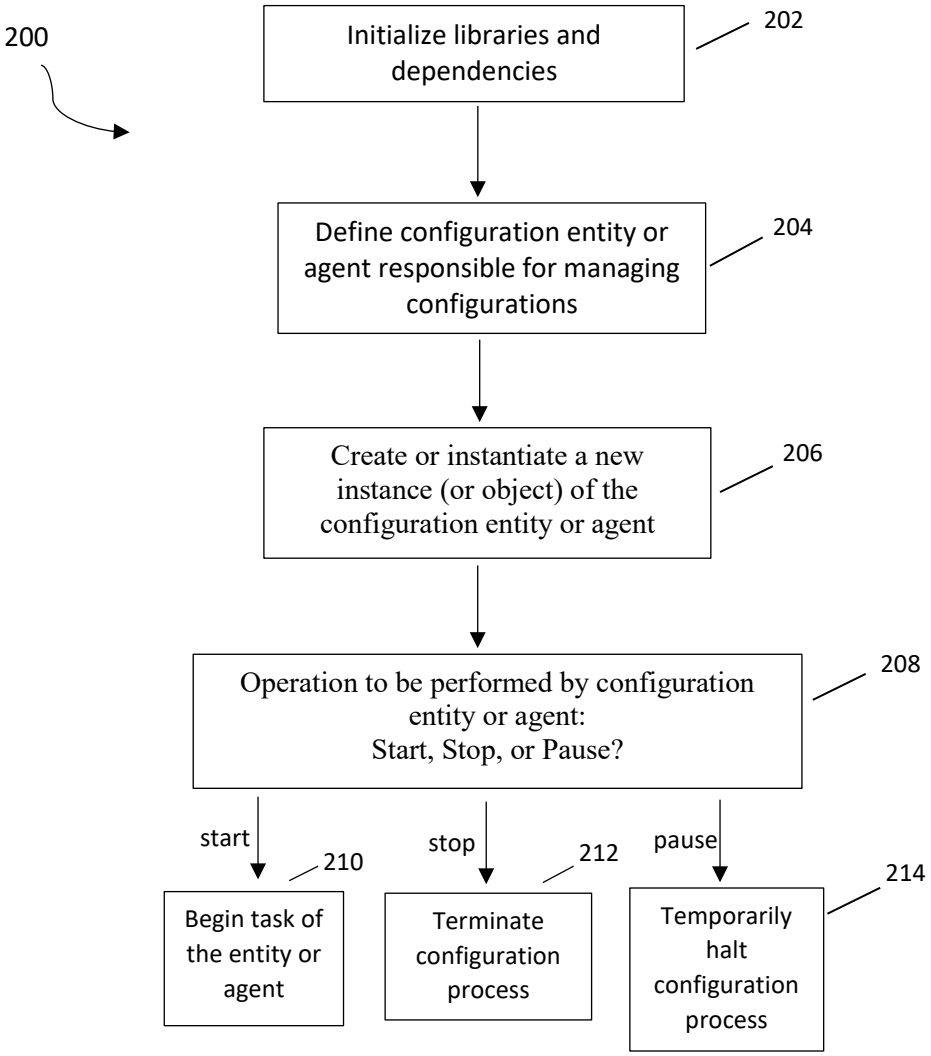
200
Initialize libraries and dependencies
202
Define configuration entity or agent responsible for managing configurations
204
Create or instantiate a new instance (or object) of the configuration entity or agent
206
Operation to be performed by configuration entity or agent:
Start, Stop, or Pause?
208
start
stop
pause
210
212
214
Begin task of the entity or agent
Terminate configuration process
Temporarily halt configuration process

FIG. 2

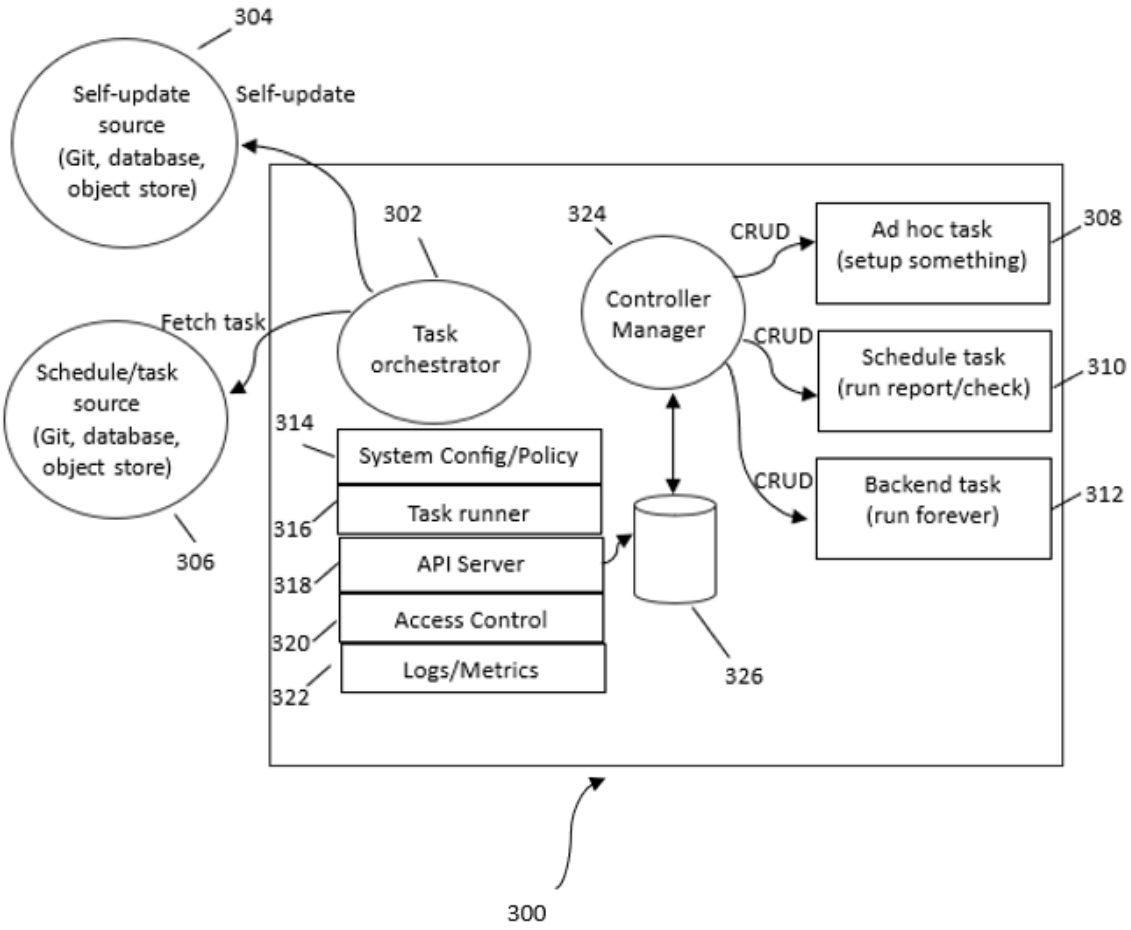
304
Self-update source (Git, database, object store)
Self-update
302
324
CRUD
Ad hoc task (setup something)
308
Controller Manager
Fetch task
Task orchestrator
CRUD
Schedule task (run report/check)
310
Schedule/task source (Git, database, object store)
314
System Config/Policy
CRUD
Backend task (run forever)
312
316
Task runner
306
318
API Server
326
320
Access Control
322
Logs/Metrics
300

FIG. 3

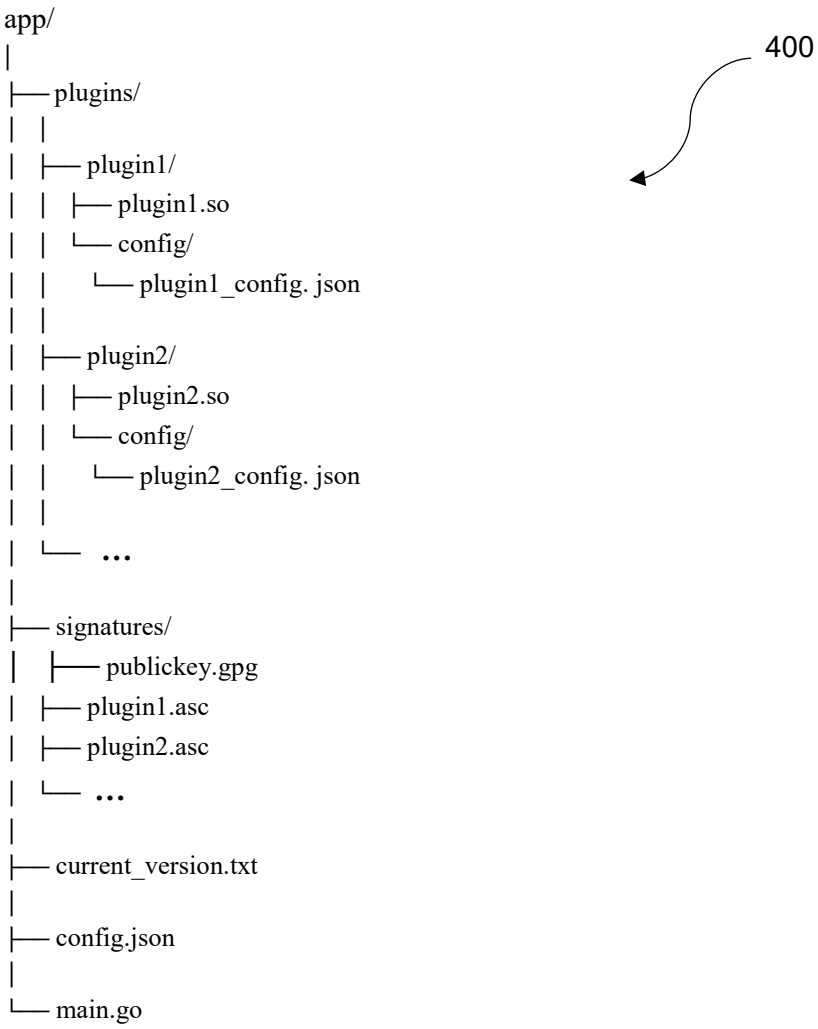
app/
400
plugins/
plugin1/
plugin1.so
config/
plugin1_config. json
plugin2/
plugin2.so
config/
plugin2_config. json
...
signatures/
publickey.gpg
plugin1.asc
plugin2.asc
...
current_version.txt
config.json
main.go

FIG. 4

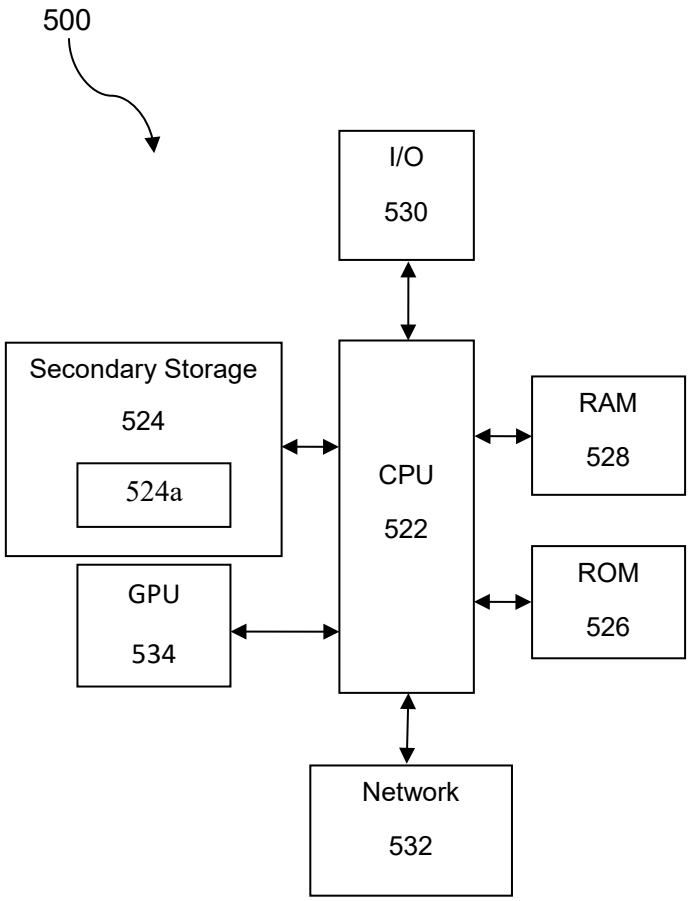
500
I/O
530
Secondary Storage
524
524a
CPU
522
RAM
528
GPU
534
ROM
526
Network
532

FIG. 5